LONE TREE RECREATION CENTER - PICKLEBALL

CITY OF LONE TREE, ADAMS COUNTY, STATE OF COLORADO

CONSTRUCTION PLANS

CAUTION - NOTICE TO CONTRACTOR

THE CONTRACTOR IS SPECIFICALLY CAUTIONED THAT THE LOCATION AND/OR ELEVATION OF EXISTING UTILITIES AS SHOWN ON THESE PLANS IS BASED ON RECORDS OF THE VARIOUS UTILITY COMPANIES AND, WHERE POSSIBLE, MEASUREMENTS TAKEN IN THE FIELD. THE INFORMATION IS NOT TO BE RELIED ON AS BEING EXACT OR COMPLETE. THE CONTRACTOR MUST CALL THE LOCAL UTILITY LOCATION CENTER AT LEAST 48 HOURS BEFORE ANY EXCAVATION TO REQUEST EXACT FIELD LOCATIONS OF THE UTILITIES. IT SHALL BE THE RESPONSIBILITY OF THE CONTRACTOR TO RELOCATE ALL EXISTING UTILITIES WHICH CONFLICT WITH THE PROPOSED IMPROVEMENTS SHOWN ON THE PLANS.

THE CONTRACTOR SHALL BE RESPONSIBLE FOR ANY DAMAGE TO EXISTING IMPROVEMENTS AND UTILITIES AND SHALL REPAIR ANY DAMAGE AT HIS EXPENSE.

811 Know what's below. Call before you dig.

LEGEND

- PROPERTY LINE
- EXISTING EASEMENT
- EXISTING CONCRETE
- EXISTING SIDEWALK
- EXISTING CURB & GUTTER
- EXISTING PARKING STRIPING
- CONCRETE PAVEMENT
- PROPOSED SIDEWALK
- PROPOSED CURB & GUTTER
- 5280 — EXISTING MAJOR CONTOUR
- 5281 — EXISTING MINOR CONTOUR
- 00 — PROPOSED MAJOR CONTOUR
- 01 — PROPOSED MINOR CONTOUR
- LIMIT OF DISTURBANCE

FOR ALL OTHER BMP SYMBOL DESIGNATIONS
REFER TO LONE TREE GESC PLAN SHEET 1 OF 3.

GENERAL NOTES

1. SITE IMPROVEMENTS ARE REQUIRED TO BE COVERED UNDER THE COLORADO DISCHARGE PERMIT SYSTEM (CDPS) GENERAL PERMIT COR400000 FOR STORMWATER DISCHARGES ASSOCIATED WITH CONSTRUCTION ACTIVITIES AS WELL AS CITY OF LONE TREE PERMIT COR-080016. STATE PERMIT APPLICATION SHALL BE MADE WITH THE COLORADO DEPARTMENT OF HEALTH & THE ENVIRONMENT THROUGH THE COLORADO ENVIRONMENTAL ONLINE SYSTEM (CEOS) ACCESSIBLE AT HTTPS://CEOS.COLORADO.GOV/CO/CEOS/PUBLIC. FOR CITY OF LONE TREE PERMIT INFORMATION: HTTPS://CITYOFLONETREE.COM.
2. PERMIT(S) COVERAGE REQUIRES THE DEVELOPMENT OF A STORMWATER MANAGEMENT PLAN (PLAN) IDENTIFYING AND ADDRESSING THE FOLLOWING ITEMS SPECIFIC TO THIS CONSTRUCTION ACTIVITY: (A) QUALIFIED STORMWATER MANAGER, (B) SPILL PREVENTION AND RESPONSE PLAN, (C) MATERIALS HANDLING, (D) POTENTIAL SOURCES OF POLLUTION, (E) IMPLEMENTATION OF CONTROL MEASURES, (F) SITE DESCRIPTION, (G) SITE MAP, (H) FINAL STABILIZATION AND LONG TERM STORMWATER MANAGEMENT, AND (I) SITE INSPECTION REPORTS.
3. STERLING DESIGN ASSOCIATES, LLC HAS PREPARED AND MADE AVAILABLE A PLAN FOR THE OWNER PROVIDING FOR LOCAL JURISDICTIONAL ENTITLEMENT REVIEW, ONLY. THE PLAN IS INCOMPLETE WITHOUT ADDITIONAL INPUT FROM THE OPERATOR; INCLUDING, BUT NOT LIMITED TO, IDENTIFICATION OF THE PROJECT STORMWATER MANAGER AND INCLUSION OF A DETAILED CONSTRUCTION AND CONTROL MEASURE IMPLEMENTATION SCHEDULE. THE OPERATOR IS SOLELY RESPONSIBLE FOR COMPLETENESS AND IMPLEMENTATION OF A PLAN COMPLIANT WITH THE CDPS COR400000 AND LOCAL PERMIT REQUIREMENTS AT ALL TIMES OF SITE PERMIT COVERAGE.
4. THE OWNER AND OPERATOR MUST IMPLEMENT THE PROVISIONS OF THE PLAN AS WRITTEN AND AS MAY BE UPDATED, FROM COMMENCEMENT OF CONSTRUCTION ACTIVITY UNTIL FINAL STABILIZATION IS COMPLETE.
5. THE OPERATOR SHALL ENSURE ALL MATERIALS IMPORTED OR EXPORTED FROM THE SITE ARE PROPERLY SECURED AND COVERED TO PREVENT LOSS DURING TRANSPORT. ALL HAUL ROUTES SHALL BE DOCUMENTED WITHIN THE PLAN. ALL OFF-SITE SPOIL, BORROW, AND WASTE DISPOSAL FACILITIES SHALL BE PROPERLY PERMITTED FOR OPERATION.
6. THE LANDSCAPE PLAN, L101, WILL ACT AS THE SWMP - FINAL PLAN. PLEASE REFER TO SAID PLAN FOR FINAL SITE STABILIZATION.
7. FOR THE STAGE STORAGE AREA AND VEHICLE TRACKING CONTROL, THE CONTRACTOR SHALL UTILIZE THE EXISTING PAVEMENT TO THE GREATEST EXTENT PRACTICAL. (PRE-ROLLED MATS, ETC.). OTHERWISE, REFER TO THE STANDARD DETAILS. NOTE: THE EXISTING PAVEMENT IS NOT ITSELF THE TRACKING CONTROL.
8. THE CONTRACTOR MAY UTILIZE A PRE-FABRICATED CONCRETE WASHOUT BASIN IF IT IS BEING PLACED ON EXISTING PAVEMENT. OTHERWISE, REFER TO THE STANDARD DETAIL.

CONSTRUCTION SEQUENCE

1. MEET ALL BMP PROTECTION, PRE-CONSTRUCTION MEETING, AND/OR OTHER CITY, COUNTY, STATE OR FEDERAL PERMIT REQUIREMENTS.
2. INSTALL INITIAL, PERIMETER BMP CONTROLS (CF, VTC) PRIOR TO ANY LAND DISTURBANCE.
3. CLEAR SITE AND BEGIN GRADING.
4. BEGIN UTILITY CONSTRUCTION.
5. ADJUST BMPS AS NECESSARY TO MAINTAIN EROSION AND SEDIMENTATION PROTECTION THROUGHOUT CONSTRUCTION. INSTALL ADDITIONAL BMPS (CWA, SSA, SCL, RS, ECB).
6. COMPLETE GRADING AND BEGIN CURB AND GUTTER AND FLATWORK OPERATIONS. INSTALL ADDITIONAL BMPS.
7. INSTALL FINAL LANDSCAPING. RE: LANDSCAPE PLAN, L101.
8. REMOVE BMPS ONCE SITE REACHES FINAL STABILIZATION.

CITY OF LONE TREE

DATE

THESE CONSTRUCTION PLANS HAVE BEEN REVIEWED BY THE CITY OF LONE TREE FOR GRADING AND EROSION CONTROL ONLY.

ENGINEERING DIVISION ACCEPTANCE BLOCK

STERLING DESIGN ASSOCIATES
Civil Engineers | Landscape Architects
2009 W. Littleton Blvd. #300 Littleton, CO 80120
303.794.4727 | www.SterlingDesignAssociates.com

PREPARED UNDER THE DIRECT SUPERVISION OF
RYAN J. LORTUS, PE
COLORADO REGISTRATION NO. 48224
FOR & ON BEHALF OF STERLING DESIGN ASSOCIATES, LLC

PRELIMINARY
NOT FOR CONSTRUCTION

STERLING DESIGN ASSOCIATES, LLC

ISSUES & REVISIONS

NO.:	DATE:	BY:	DESCRIPTION:
1	-	-	-
2	-	-	-
3	-	-	-
4	-	-	-
5	-	-	-
6	-	-	-

DATE: 03/28/2022	SCALE: 1" = 20'
PROJECT MANAGER: JLW	PROJECT NO.: -
DRAWN BY: RJL	DRAWING FILE: -

PROJECT:
LONE TREE RECREATION CENTER PICKLE BALL COURTS
10249 RIDGEGATE CIRCLE
LONE TREE, CO 80124

SOUTH SUBURBAN PARKS & RECREATION

CLIENT:

4810 E. COUNTY LINE RD.
LITTLETON, CO 80126

TEL: (303) 798-5131

SHEET TITLE:
STORMWATER MANAGEMENT PLAN (SWMP) - INITIAL

SHEET NUMBER:
C901

LONE TREE RECREATION CENTER - PICKLEBALL

CITY OF LONE TREE, ADAMS COUNTY, STATE OF COLORADO

CONSTRUCTION PLANS

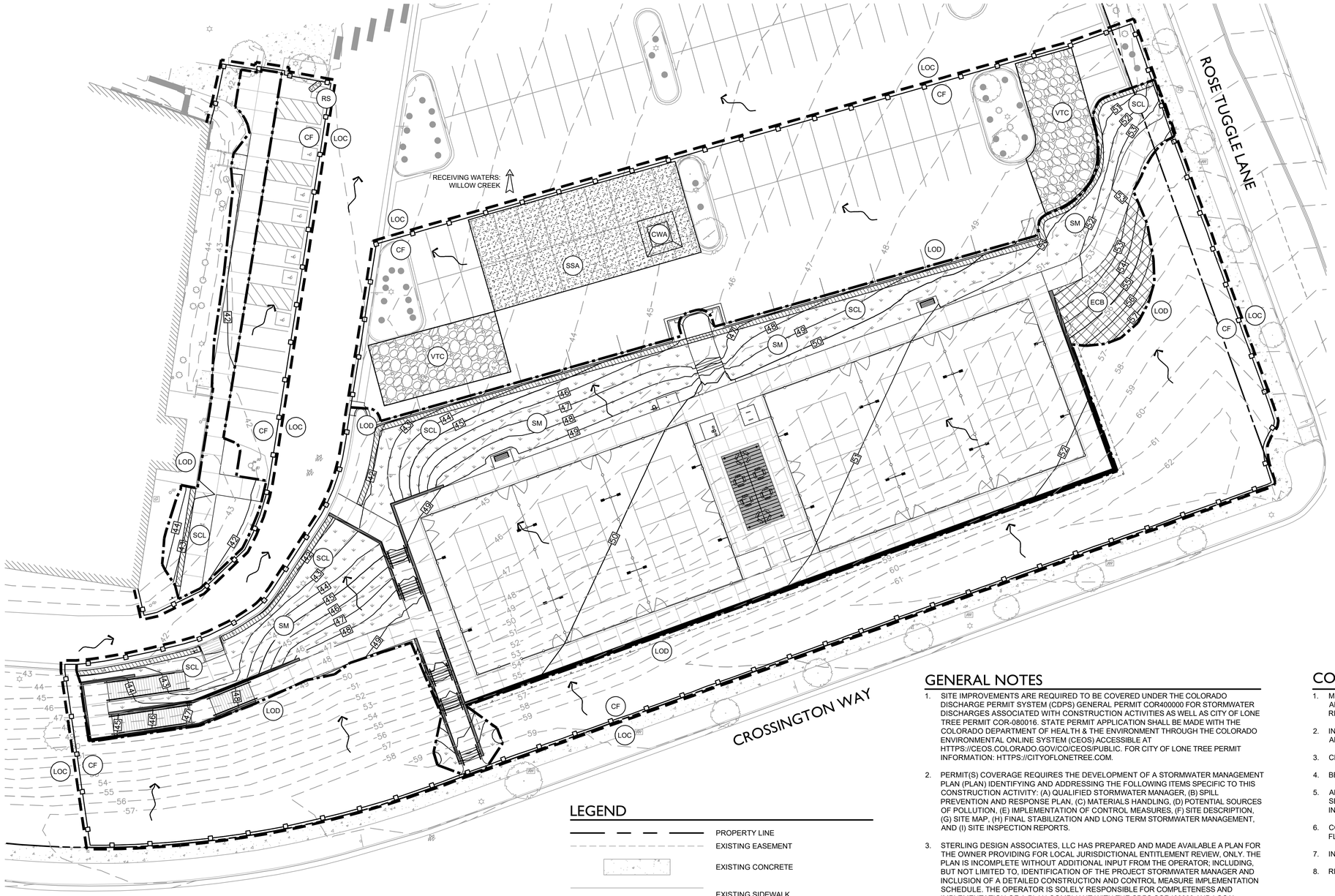

LEGEND

- PROPERTY LINE
- EXISTING EASEMENT
- EXISTING CONCRETE
- EXISTING SIDEWALK
- EXISTING CURB & GUTTER
- EXISTING PARKING STRIPING
- CONCRETE PAVEMENT
- PROPOSED SIDEWALK
- PROPOSED CURB & GUTTER
- 5280 — EXISTING MAJOR CONTOUR
- 5281 — EXISTING MINOR CONTOUR
- 00 — PROPOSED MAJOR CONTOUR
- 01 — PROPOSED MINOR CONTOUR
- LIMIT OF DISTURBANCE

FOR ALL OTHER BMP SYMBOL DESIGNATIONS
REFER TO LONE TREE GESC PLAN SHEET 1 OF 3.

CAUTION - NOTICE TO CONTRACTOR

THE CONTRACTOR IS SPECIFICALLY CAUTIONED THAT THE LOCATION AND/OR ELEVATION OF EXISTING UTILITIES AS SHOWN ON THESE PLANS IS BASED ON RECORDS OF THE VARIOUS UTILITY COMPANIES AND, WHERE POSSIBLE, MEASUREMENTS TAKEN IN THE FIELD. THE INFORMATION IS NOT TO BE RELIED ON AS BEING EXACT OR COMPLETE. THE CONTRACTOR MUST CALL THE LOCAL UTILITY LOCATION CENTER AT LEAST 48 HOURS BEFORE ANY EXCAVATION TO REQUEST EXACT FIELD LOCATIONS OF THE UTILITIES. IT SHALL BE THE RESPONSIBILITY OF THE CONTRACTOR TO RELOCATE ALL EXISTING UTILITIES WHICH CONFLICT WITH THE PROPOSED IMPROVEMENTS SHOWN ON THE PLANS.

THE CONTRACTOR SHALL BE RESPONSIBLE FOR ANY DAMAGE TO EXISTING IMPROVEMENTS AND UTILITIES AND SHALL REPAIR ANY DAMAGE AT HIS EXPENSE.

811 Know what's below. Call before you dig.

GENERAL NOTES

1. SITE IMPROVEMENTS ARE REQUIRED TO BE COVERED UNDER THE COLORADO DISCHARGE PERMIT SYSTEM (CDPS) GENERAL PERMIT COR400000 FOR STORMWATER DISCHARGES ASSOCIATED WITH CONSTRUCTION ACTIVITIES AS WELL AS CITY OF LONE TREE PERMIT COR-080016. STATE PERMIT APPLICATION SHALL BE MADE WITH THE COLORADO DEPARTMENT OF HEALTH & THE ENVIRONMENT THROUGH THE COLORADO ENVIRONMENTAL ONLINE SYSTEM (CEOS) ACCESSIBLE AT HTTPS://CEOS.COLORADO.GOV/CO/CEOS/PUBLIC. FOR CITY OF LONE TREE PERMIT INFORMATION: HTTPS://CITYOFLONETREE.COM.
2. PERMIT(S) COVERAGE REQUIRES THE DEVELOPMENT OF A STORMWATER MANAGEMENT PLAN (PLAN) IDENTIFYING AND ADDRESSING THE FOLLOWING ITEMS SPECIFIC TO THIS CONSTRUCTION ACTIVITY: (A) QUALIFIED STORMWATER MANAGER, (B) SPILL PREVENTION AND RESPONSE PLAN, (C) MATERIALS HANDLING, (D) POTENTIAL SOURCES OF POLLUTION, (E) IMPLEMENTATION OF CONTROL MEASURES, (F) SITE DESCRIPTION, (G) SITE MAP, (H) FINAL STABILIZATION AND LONG TERM STORMWATER MANAGEMENT, AND (I) SITE INSPECTION REPORTS.
3. STERLING DESIGN ASSOCIATES, LLC HAS PREPARED AND MADE AVAILABLE A PLAN FOR THE OWNER PROVIDING FOR LOCAL JURISDICTIONAL ENTITLEMENT REVIEW, ONLY. THE PLAN IS INCOMPLETE WITHOUT ADDITIONAL INPUT FROM THE OPERATOR; INCLUDING, BUT NOT LIMITED TO, IDENTIFICATION OF THE PROJECT STORMWATER MANAGER AND INCLUSION OF A DETAILED CONSTRUCTION AND CONTROL MEASURE IMPLEMENTATION SCHEDULE. THE OPERATOR IS SOLELY RESPONSIBLE FOR COMPLETENESS AND IMPLEMENTATION OF A PLAN COMPLIANT WITH THE CDPS COR400000 AND LOCAL PERMIT REQUIREMENTS AT ALL TIMES OF SITE PERMIT COVERAGE.
4. THE OWNER AND OPERATOR MUST IMPLEMENT THE PROVISIONS OF THE PLAN AS WRITTEN AND AS MAY BE UPDATED, FROM COMMENCEMENT OF CONSTRUCTION ACTIVITY UNTIL FINAL STABILIZATION IS COMPLETE.
5. THE OPERATOR SHALL ENSURE ALL MATERIALS IMPORTED OR EXPORTED FROM THE SITE ARE PROPERLY SECURED AND COVERED TO PREVENT LOSS DURING TRANSPORT. ALL HAUL ROUTES SHALL BE DOCUMENTED WITHIN THE PLAN. ALL OFF-SITE SPOIL, BORROW, AND WASTE DISPOSAL FACILITIES SHALL BE PROPERLY PERMITTED FOR OPERATION.
6. THE LANDSCAPE PLAN, L101, WILL ACT AS THE SWMP - FINAL PLAN. PLEASE REFER TO SAID PLAN FOR FINAL SITE STABILIZATION.
7. FOR THE STAGE STORAGE AREA AND VEHICLE TRACKING CONTROL, THE CONTRACTOR SHALL UTILIZE THE EXISTING PAVEMENT TO THE GREATEST EXTENT PRACTICAL. (PRE-ROLLED MATS, ETC.), OTHERWISE, REFER TO THE STANDARD DETAILS. NOTE: THE EXISTING PAVEMENT IS NOT ITSELF THE TRACKING CONTROL.
8. THE CONTRACTOR MAY UTILIZE A PRE-FABRICATED CONCRETE WASHOUT BASIN IF IT IS BEING PLACED ON EXISTING PAVEMENT. OTHERWISE, REFER TO THE STANDARD DETAIL.

CONSTRUCTION SEQUENCE

1. MEET ALL BMP PROTECTION, PRE-CONSTRUCTION MEETING, AND/OR OTHER CITY, COUNTY, STATE OR FEDERAL PERMIT REQUIREMENTS.
2. INSTALL INITIAL, PERIMETER BMP CONTROLS (CF, VTC) PRIOR TO ANY LAND DISTURBANCE.
3. CLEAR SITE AND BEGIN GRADING.
4. BEGIN UTILITY CONSTRUCTION.
5. ADJUST BMPS AS NECESSARY TO MAINTAIN EROSION AND SEDIMENTATION PROTECTION THROUGHOUT CONSTRUCTION. INSTALL ADDITIONAL BMPS (CWA, SSA, SCL, RS, ECB).
6. COMPLETE GRADING AND BEGIN CURB AND GUTTER AND FLATWORK OPERATIONS. INSTALL ADDITIONAL BMPS.
7. INSTALL FINAL LANDSCAPING. RE: LANDSCAPE PLAN, L101.
8. REMOVE BMPS ONCE SITE REACHES FINAL STABILIZATION.

CITY OF LONE TREE

DATE

THESE CONSTRUCTION PLANS HAVE BEEN REVIEWED BY THE CITY OF LONE TREE FOR GRADING AND EROSION CONTROL ONLY.

ENGINEERING DIVISION ACCEPTANCE BLOCK

STERLING DESIGN ASSOCIATES
Civil Engineers | Landscape Architects
2009 W. Littleton Blvd. #300 Littleton, CO 80120
303.794.4727 | www.SterlingDesignAssociates.com

PREPARED UNDER THE DIRECT SUPERVISION OF
RYAN J. LORTUS, PE
COLORADO REGISTRATION NO. 48224
FOR & ON BEHALF OF STERLING DESIGN ASSOCIATES, LLC

PRELIMINARY
NOT FOR CONSTRUCTION

STERLING DESIGN ASSOCIATES, LLC

ISSUES & REVISIONS

NO.:	DATE:	BY:	DESCRIPTION:
1	-	-	-
2	-	-	-
3	-	-	-
4	-	-	-
5	-	-	-
6	-	-	-

DATE: 03/28/2022	SCALE: 1" = 20'
PROJECT MANAGER: JLW	PROJECT NO.: -
DRAWN BY: RJL	DRAWING FILE: -

PROJECT:
LONE TREE RECREATION CENTER PICKLE BALL COURTS
10249 RIDGEGATE CIRCLE
LONE TREE, CO 80124

SOUTH SUBURBAN PARKS & RECREATION

CLIENT:

4810 E. COUNTY LINE RD.
LITTLETON, CO 80126

TEL: (303) 798-5131

SHEET TITLE:
STORMWATER MANAGEMENT PLAN (SWMP) - INTERIM

SHEET NUMBER:
C902

GRADING, EROSION, AND SEDIMENT CONTROL (GESC) GENERAL NOTES

1. THE DOUGLAS COUNTY ENGINEER'S SIGNATURE AFFIXED TO THIS DOCUMENT INDICATES THE DOUGLAS COUNTY PUBLIC WORKS ENGINEERING HAS REVIEWED THE DOCUMENT AND FOUND IT IN GENERAL COMPLIANCE WITH THE DOUGLAS COUNTY GRADING, EROSION AND SEDIMENT CONTROL (GESC) CRITERIA MANUAL. THE DOUGLAS COUNTY DIRECTOR OF ENGINEERING SERVICES, THROUGH ACCEPTANCE OF THIS DOCUMENT, ASSUMES NO RESPONSIBILITY (OTHER THAN AS STATED ABOVE) FOR THE COMPLETENESS AND/OR ACCURACY OF THESE DOCUMENTS.
2. THE ADEQUACY OF THIS GESC PLAN LIES WITH THE ORIGINAL DESIGN ENGINEER.
3. THE GESC PLAN SHALL BE CONSIDERED VALID FOR THREE (3) YEARS FROM THE DATE OF ACCEPTANCE BY DOUGLAS COUNTY, AFTER WHICH TIME THE PLAN SHALL BE VOID AND WILL BE SUBJECT TO RE-REVIEW AND RE-ACCEPTANCE BY DOUGLAS COUNTY.
4. ALL MATERIALS AND WORKMANSHIP SHALL BE SUBJECT TO INSPECTION BY THE DOUGLAS COUNTY PUBLIC WORKS ENGINEERING. DOUGLAS COUNTY RESERVES THE RIGHT TO ACCEPT OR REJECT ANY SUCH MATERIALS AND WORKMANSHIP THAT DOES NOT CONFORM TO THE GESC MANUAL, GESC PLAN OR GESC PERMIT.
5. THE PLACEMENT OF EROSION AND SEDIMENT CONTROL BEST MANAGEMENT PRACTICES (BMPs) SHALL BE IN ACCORDANCE WITH THE DOUGLAS COUNTY ACCEPTED GESC PLAN AND THE DOUGLAS COUNTY GESC MANUAL, AS AMENDED.
6. ANY VARIATION IN MATERIAL, TYPE OR LOCATION OF EROSION AND SEDIMENT CONTROL BMPs FROM THE DOUGLAS COUNTY ACCEPTED GESC PLAN WILL REQUIRE APPROVAL FROM AN ACCOUNTABLE REPRESENTATIVE OF THE DOUGLAS COUNTY PUBLIC WORKS ENGINEERING.
7. AFTER THE GESC PLAN HAS BEEN ACCEPTED, THE GESC PERMIT APPLIED FOR, FEES AND FISCAL SECURITY SUBMITTED TO THE COUNTY, AND THE GESC FIELD MANUAL OBTAINED AND REVIEWED, THE CONTRACTOR MAY INSTALL THE INITIAL-STAGE EROSION AND SEDIMENT CONTROL BMPs INDICATED ON THE ACCEPTED GESC PLAN.
8. THE FIRST BMP TO BE INSTALLED ON THE SITE SHALL BE CONSTRUCTION FENCE, MARKERS, OR OTHER APPROVED MEANS OF DEFINING THE LIMITS OF CONSTRUCTION, INCLUDING CONSTRUCTION LIMITS ADJACENT TO STREAM CORRIDORS AND OTHER AREAS TO BE PRESERVED.
9. AFTER INSTALLATION OF THE INITIAL-STAGE EROSION AND SEDIMENT CONTROL BMPs, THE PERMITTEE SHALL CALL THE DOUGLAS COUNTY ENGINEERING PERMITS STAFF AT 303-660-7487 TO SCHEDULE A PRECONSTRUCTION MEETING AT THE PROJECT SITE. THE REQUEST SHALL BE MADE A MINIMUM OF THREE BUSINESS DAYS PRIOR TO THE REQUESTED MEETING TIME. NO CONSTRUCTION ACTIVITIES SHALL BE PLANNED WITHIN 24 HOURS AFTER THE PRECONSTRUCTION MEETING.
10. THE OWNER OR OWNER'S REPRESENTATIVE, THE GESC MANAGER, THE GENERAL CONTRACTOR, AND THE GRADING SUBCONTRACTOR, IF DIFFERENT FROM THE GENERAL CONTRACTOR, MUST ATTEND THE PRECONSTRUCTION MEETING. IF ANY OF THE REQUIRED PARTICIPANTS FAIL TO ATTEND THE PRECONSTRUCTION MEETING, OR IF THE GESC FIELD MANUAL IS NOT ON SITE, OR IF THE INSTALLATION OF THE INITIAL BMPs ARE NOT APPROVED BY THE DOUGLAS COUNTY EROSION CONTROL INSPECTOR, THE APPLICANT WILL HAVE TO PAY A REINSPECTION FEE, ADDRESS ANY PROBLEMS WITH BMP INSTALLATION, AND CALL TO RESCHEDULE THE MEETING, WITH A CORRESPONDING DELAY IN THE START OF CONSTRUCTION. DOUGLAS COUNTY STRONGLY ENCOURAGES THE APPLICANT TO HAVE THE ENGINEER OF RECORD AT THE PRECONSTRUCTION MEETING.
11. CONSTRUCTION SHALL NOT BEGIN UNTIL THE DOUGLAS COUNTY EROSION CONTROL INSPECTOR APPROVES THE INSTALLATION OF THE INITIAL BMPs AND THE APPROVED GESC PERMIT IS PICKED UP FROM THE COUNTY AND IS IN-HAND ON THE SITE. THE COMPLETED PERMIT WILL BE AVAILABLE WITHIN 24-HOURS AFTER THE INSTALLATION OF THE INITIAL BMPs ARE APPROVED.
12. THE GESC MANAGER SHALL STRICTLY ADHERE TO THE DOUGLAS COUNTY-APPROVED LIMITS OF CONSTRUCTION AT ALL TIMES. THE DOUGLAS COUNTY PUBLIC WORKS ENGINEERING MUST APPROVE ANY CHANGES TO THE LIMITS OF CONSTRUCTION AND, AT THE DISCRETION OF THE ENGINEERING DIVISION, ADDITIONAL EROSION/SEDIMENT CONTROLS MAY BE REQUIRED IN ANY ADDITIONAL AREAS OF CONSTRUCTION.
13. THE MAXIMUM AREA OF CONSTRUCTION SHALL BE LIMITED TO 40 ACRES (70 ACRES IF APPROVED FOR SOIL MITIGATION OPERATIONS) TO REDUCE THE AMOUNT OF LAND DISTURBED AT ANY ONE TIME. LARGER SITES SHALL BE DIVIDED INTO PHASES THAT ARE EACH 40 (OR 70) ACRES OR LESS IN SIZE. THESE PROJECTS SHALL CONDUCT GRADING ACTIVITIES IN ACCORDANCE WITH THE ACCEPTED GESC PLAN. BMP INSTALLATION AND APPROVAL BY DOUGLAS COUNTY AT THE START AND COMPLETION OF EACH PHASE SHALL BE CONDUCTED IN ACCORDANCE WITH THE PROCEDURES OUTLINED IN THE GESC MANUAL AND/OR GESC FIELD MANUAL.
14. PRIOR TO ANY CONSTRUCTION ACTIVITY, THE PERMITTEE SHALL VERIFY THE LOCATION OF EXISTING UTILITIES. FOR INFORMATION, CONTACT THE UTILITY NOTIFICATION CENTER OF COLORADO (UNCC) AT 811, 1-800-922-1987, OR WWW.COLORADO811.ORG.
15. NATURAL VEGETATION SHALL BE RETAINED AND PROTECTED WHEREVER POSSIBLE. EXPOSURE OF SOIL TO EROSION BY REMOVAL OR DISTURBANCE OF VEGETATION SHALL BE LIMITED TO THE AREA REQUIRED FOR IMMEDIATE CONSTRUCTION OPERATIONS.
16. THE GESC PERMIT SHALL BE VALID FOR A PERIOD OF ONE (1) YEAR FROM THE DATE OF ISSUANCE.
17. A COPY OF THE GESC PERMIT, ACCEPTED GESC PLANS AND THE GESC FIELD MANUAL SHALL BE ON SITE AT ALL TIMES.
18. THE GESC MANAGER SHALL BE RESPONSIBLE FOR ENSURING THAT THE SITE REMAINS IN COMPLIANCE WITH THE GESC PERMIT AND SHALL BE THE PERMITTEE'S CONTACT PERSON WITH THE COUNTY FOR ALL MATTERS PERTAINING TO THE GESC PERMIT. THE GESC MANAGER SHALL BE PRESENT AT THE SITE THE MAJORITY OF THE TIME AND SHALL BE AVAILABLE THROUGH A 24-HOUR CONTACT NUMBER. IN THE EVENT THAT THE CONTRACTOR'S GESC MANAGER IS NOT ON SITE AND CANNOT BE REACHED DURING A VIOLATION, THE ALTERNATE GESC MANAGER SHALL BE CONTACTED. IF NEITHER THE GESC MANAGER NOR ALTERNATE GESC MANAGER CAN BE CONTACTED DURING ANY VIOLATION, A STOP WORK ORDER MAY BE ISSUED.
19. ALL CONSTRUCTION TRAFFIC MUST ENTER/EXIT THE SITE THROUGH THE DOUGLAS COUNTY-APPROVED ACCESS POINT. A VEHICLE TRACKING CONTROL PAD IS REQUIRED AT ALL ACCESS POINTS ON THE SITE. ADDITIONAL STABILIZED CONSTRUCTION ENTRANCES MAY BE ADDED WITH AUTHORIZATION FROM THE DOUGLAS COUNTY PUBLIC WORKS ENGINEERING.
20. THE GESC MANAGER IS RESPONSIBLE FOR CLEANUP OF SEDIMENT OR CONSTRUCTION DEBRIS TRACKED ONTO ADJACENT PAVED AREAS. PAVED AREAS INCLUDING STREETS ARE TO BE KEPT CLEAN THROUGHOUT BUILD-OUT AND SHALL BE CLEANED, WITH A STREET SWEEPER OR SIMILAR DEVICE, AT FIRST NOTICE OF ACCIDENTAL TRACKING OR AT THE DISCRETION OF THE DOUGLAS COUNTY EROSION CONTROL INSPECTOR. STREET WASHING IS NOT ALLOWED. DOUGLAS COUNTY RESERVES THE RIGHT TO REQUIRE ADDITIONAL MEASURES TO ENSURE AREA STREETS ARE KEPT FREE OF SEDIMENT AND/OR CONSTRUCTION DEBRIS.
21. APPROVED EROSION AND SEDIMENT CONTROL BMPs SHALL BE MAINTAINED AND KEPT IN GOOD REPAIR FOR THE DURATION OF THIS PROJECT. AT A MINIMUM, THE GESC MANAGER SHALL INSPECT ALL BMPs IN ACCORDANCE WITH THE ACCEPTED GESC PLAN AND GESC MANUAL. LEVEL III VIOLATIONS SHALL BE CORRECTED IMMEDIATELY AFTER THE PERMITTEE(S) NOTICE THE VIOLATION(S) OR ARE NOTIFIED OF THE VIOLATION(S). GENERALLY DOUGLAS COUNTY WILL REINSPECT FOR COMPLIANCE WITHIN 48 HOURS OF NOTIFICATION OF LEVEL III VIOLATIONS. LEVEL II VIOLATIONS SHALL BE CORRECTED IMMEDIATELY, OR AS DIRECTED BY A DOUGLAS COUNTY EROSION CONTROL INSPECTOR. ACCUMULATED SEDIMENT AND CONSTRUCTION DEBRIS SHALL BE REMOVED AND PROPERLY DISPOSED.
22. STRAW BALES ARE NOT A DOUGLAS COUNTY ACCEPTED SEDIMENT CONTROL BMP.
23. TOPSOIL SHALL BE STRIPPED AND STOCKPILED IN THE LOCATION SHOWN ON THE ACCEPTED GESC PLAN. THE GESC MANAGER SHALL SCHEDULE AN INSPECTION WITH THE DOUGLAS COUNTY EROSION CONTROL INSPECTOR AS SOON AS TOPSOIL STRIPPING IS COMPLETED. FAILURE TO SCHEDULE SUCH INSPECTION OR FAILURE TO STOCKPILE TOPSOIL SHALL RESULT IN ISSUANCE OF A STOP WORK ORDER. THE STOP WORK ORDER SHALL REMAIN IN PLACE UNTIL TOPSOIL IS STOCKPILED ON SITE OR APPROPRIATE SOIL AMENDMENTS ARE STOCKPILED ON SITE.
24. THE ACCEPTED GESC PLAN MAY REQUIRE CHANGES OR ALTERATIONS AFTER APPROVAL TO MEET CHANGING SITE OR PROJECT CONDITIONS OR TO ADDRESS INEFFICIENCIES IN DESIGN OR INSTALLATION. THE GESC MANAGER SHALL OBTAIN PRIOR APPROVAL FROM THE DESIGN ENGINEER AND DOUGLAS COUNTY PUBLIC WORKS ENGINEERING FOR ANY PROPOSED CHANGES.
25. LINING OF TEMPORARY SWALES AND DITCHES SHALL BE IN ACCORDANCE WITH THE GESC CRITERIA MANUAL.
26. NO PERMANENT EARTH SLOPES GREATER THAN 3:1 SHALL BE ALLOWED.
27. ANY SETTLEMENT OR SOIL ACCUMULATIONS BEYOND THE LIMITS OF CONSTRUCTION DUE TO GRADING OR EROSION SHALL BE REPAIRED IMMEDIATELY BY THE GESC MANAGER. THE GESC MANAGER SHALL BE HELD RESPONSIBLE FOR OBTAINING ACCESS RIGHTS TO ADJACENT PROPERTY, IF NEEDED, AND REMEDIATING ANY ADVERSE IMPACTS TO ADJACENT WATERWAYS, WETLANDS, PROPERTIES, ETC. RESULTING FROM WORK DONE AS PART OF THIS PROJECT.
28. A WATER SOURCE SHALL BE AVAILABLE ON SITE DURING EARTHWORK OPERATIONS AND UTILIZED AS REQUIRED TO MINIMIZE DUST FROM EARTHWORK EQUIPMENT AND WIND.
29. SOILS THAT WILL BE STOCKPILED FOR MORE THAN THIRTY (30) DAYS SHALL BE SEEDED AND MULCHED WITHIN FOURTEEN (14) DAYS OF STOCKPILE CONSTRUCTION. NO STOCKPILES SHALL BE PLACED WITHIN ONE HUNDRED (100) FEET OF A DRAINAGE WAY UNLESS APPROVED BY THE DOUGLAS COUNTY PUBLIC WORKS ENGINEERING.
30. ALL CHEMICAL OR HAZARDOUS MATERIAL SPILLS WHICH MAY ENTER WATERS OF THE STATE OF COLORADO, WHICH INCLUDE BUT ARE NOT LIMITED TO, SURFACE WATER, GROUND WATER AND DRY GULLIES OR STORM SEWER LEADING TO SURFACE WATER, SHALL BE IMMEDIATELY REPORTED TO THE CDPHE PER CRS 25-8-601, AND DOUGLAS COUNTY. RELEASES OF PETROLEUM PRODUCTS AND CERTAIN HAZARDOUS SUBSTANCES LISTED UNDER THE FEDERAL CLEAN WATER ACT (40 CFR PART 116) MUST BE REPORTED TO THE NATIONAL RESPONSE CENTER AS WELL AS THE CDPHE. CONTACT INFORMATION FOR CDPHE, DOUGLAS COUNTY AND THE NATIONAL RESPONSE CENTER CAN BE FOUND IN APPENDIX A OF THE GESC MANUAL, AS AMENDED. SPILLS THAT POSE AN IMMEDIATE RISK TO HUMAN LIFE SHALL BE REPORTED TO 911. FAILURE TO REPORT AND CLEAN UP ANY SPILL MAY RESULT IN ISSUANCE OF A STOP WORK ORDER.
31. ALL WORK ON SITE SHALL STAY A MINIMUM OF ONE HUNDRED (100) FEET AWAY FROM ANY DRAINAGEWAY, WETLAND, ETC. UNLESS OTHERWISE NOTED ON AN ACCEPTED DOUGLAS COUNTY GESC PLAN.
32. ALL PROJECTS SHALL BALANCE EARTHWORK QUANTITIES ON SITE. IN THE EVENT A VARIANCE IS GRANTED BY THE COUNTY DIRECTOR OF ENGINEERING SERVICES TO ALLOW IMPORT OR EXPORT OF MATERIAL, THE PERMITTEE SHALL HAVE A GESC PERMIT IN HAND FOR THE IMPORT OR EXPORT SITE PRIOR TO ANY TRANSPORTING OF EARTHEN MATERIAL. THE GESC MANAGER SHALL NOTIFY THE DOUGLAS COUNTY EROSION CONTROL INSPECTOR OF THE LOCATION AND PERMIT NUMBERS OF BOTH THE EXPORTING AND IMPORTING SITES PRIOR TO ANY IMPORT/ EXPORT OPERATIONS.
33. THE USE OF REBAR, STEEL STAKES OR STEEL FENCE POSTS FOR STAKING OR SUPPORT OF ANY EROSION OR SEDIMENT CONTROL BMP IS PROHIBITED (EXCEPT STEEL TEE-POSTS FOR USE IN SUPPORTING CONSTRUCTION FENCE).
34. THE CLEANING OF CONCRETE DELIVERY TRUCK CHUTES IS RESTRICTED TO APPROVED CONCRETE WASH OUT LOCATIONS ON THE JOB SITE. THE DISCHARGE OF WATER CONTAINING WASTE CONCRETE TO THE STORM SEWER SYSTEM IS PROHIBITED. ALL CONCRETE WASTE SHALL BE PROPERLY CLEANED UP AND DISPOSED AT AN APPROPRIATE LOCATION.
35. ALL DEWATERING ON SITE SHALL BE COORDINATED WITH A DOUGLAS COUNTY EROSION CONTROL INSPECTOR AND BE FREE OF SEDIMENT IN ACCORDANCE WITH THE GESC MANUAL.
36. ALL PERMANENT INSTALLATIONS OF PIPES FOR STORM SEWERS, SLOPE DRAINS, AND CULVERTS, TOGETHER WITH RIPRAP APRONS OR OTHER INLET AND OUTLET PROTECTION, REQUIRE INSPECTION BY DOUGLAS COUNTY PUBLIC WORKS ENGINEERING (SEPARATE FROM GESC INSPECTIONS).
37. ALL DISTURBED AREAS SHALL BE DRILL SEEDED AND CRIMP MULCHED IN ACCORDANCE WITH THE GESC CRITERIA MANUAL WITHIN THIRTY (30) DAYS OF INITIAL EXPOSURE OR WITHIN FOURTEEN (14) DAYS OF SUBSTANTIAL COMPLETION (AS DEFINED BY DOUGLAS COUNTY) OF AN AREA, WHICHEVER IS LESS. THIS MAY REQUIRE MULTIPLE MOBILIZATIONS FOR SEEDING AND MULCHING.
38. ALL SLOPES STEEPER THEN 4:1 REQUIRE EROSION CONTROL BLANKETING.
39. HYDRAULIC SEEDING AND HYDRAULIC MULCHING ARE NOT AN ACCEPTABLE METHOD OF SEEDING OR MULCHING IN DOUGLAS COUNTY.
40. NO CURB AND GUTTER PERMITS SHALL BE ISSUED UNTIL ALL DISTURBED AREAS ARE DRILL SEEDED AND CRIMP MULCHED.
41. NO PAVING PERMITS SHALL BE ISSUED UNTIL ALL INTERIM INLET PROTECTION IS INSTALLED AND APPROVED BY THE EROSION CONTROL INSPECTOR.
42. A GESC INSPECTION SHALL BE CONDUCTED FOR CERTIFICATE OR TEMPORARY CERTIFICATE OF OCCUPANCY OR INITIAL ACCEPTANCE.
43. GESC MANAGER SHALL PROVIDE AND MAINTAIN PORTABLE TOILETS AND TRASH DUMPSTERS FOR THE PROJECT.

BMP LEGEND

DETAIL NO.	SHEET NO.		BMP LEGEND
1	1	CD	CHECK DAM
2	1	CB	COMPOST BLANKET
3	1	CFB	COMPOST FILTER BERM
4	1	CWA	CONCRETE WASHOUT AREA
5	1	CF	CONSTRUCTION FENCE
6	1	CM	CONSTRUCTION MARKER
7	1	CS	CURB SOCK
8	1	DW	DEWATERING
9	1	DD	DIVERSION DITCH
10	2	ECB	EROSION CONTROL BLANKET
11	2	IP	INLET PROTECTION
12	2	RCD	REINFORCED CHECK DAM
13	2	RRB	REINFORCED ROCK BERM
14	2	RRC	RRB FOR CULVERT PROTECTION
15	2	SB	SEDIMENT BASIN
16	3	SCL	SEDIMENT CONTROL LOG
17	3	ST	SEDIMENT TRAP
18	3	SM	SEEDING AND MULCHING
19	3	SF	SILT FENCE
20	3	SSA	STABILIZED STAGING AREA
21	3	SR	SURFACE ROUGHENING
22	3	TSD	TEMPORARY SLOPE DRAIN
23	3	TSC	TEMPORARY STREAM CROSSING
24	3	TER	TERRACING
25	3	VTC	VEHICLE TRACKING CONTROL
26	3	WW	VTC WITH WHEEL WASH
	1		ROCK AND RIPRAP GRADATIONS
		LOC	LIMITS OF CONSTRUCTION

CHECK DAM (CD) — 1

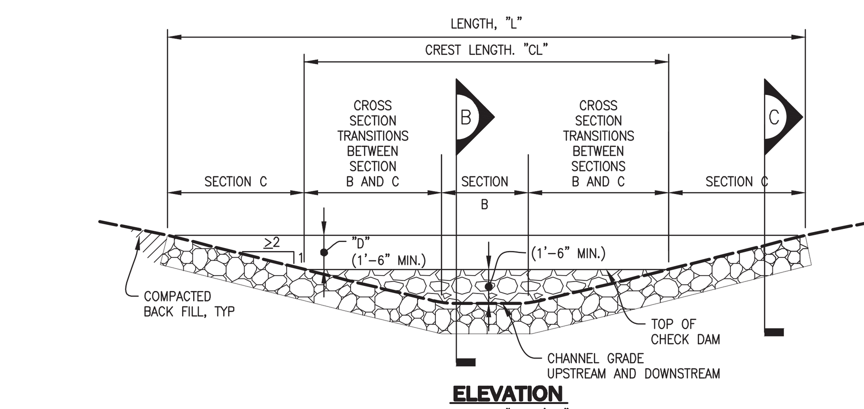

ELEVATION
SCALE: 1" = 5'-0"

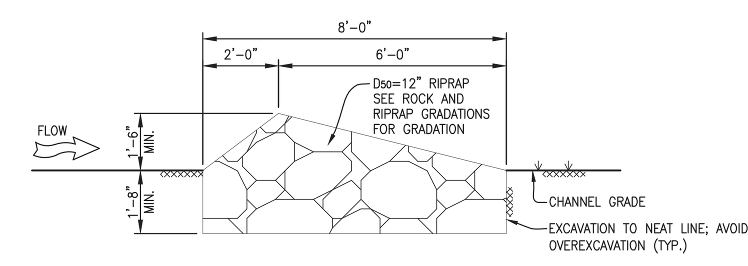

SECTION B
SCALE: 1/2" = 1'-0"

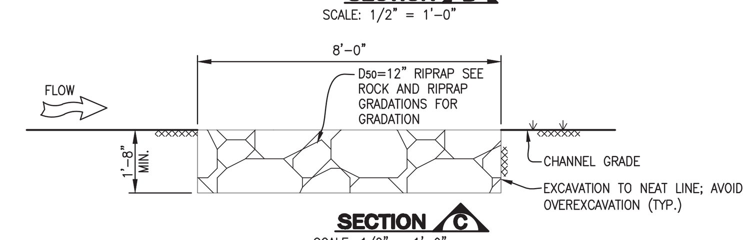

SECTION C
SCALE: 1/2" = 1'-0"

CHECK DAM INSTALLATION NOTES

1. SEE PLAN VIEW FOR:
   - LOCATIONS OF CHECK DAMS.
   - CHECK DAM TYPE (CHECK DAM OR REINFORCED CHECK DAM).
   - LENGTH, "L", CREST LENGTH, "CL", AND DEPTH, "D".
2. CHECK DAMS INDICATED ON INITIAL GESC PLAN SHALL BE INSTALLED AFTER CONSTRUCTION FENCE, BUT PRIOR TO ANY UPSTREAM LAND-DISTURBING ACTIVITIES.
3. RIPRAP UTILIZED FOR CHECK DAMS SHALL HAVE A D_{50} MEDIAN STONE SIZE OF 12".
4. RIPRAP PAD SHALL BE TRENCHED INTO THE GROUND A MINIMUM OF 1'-8".
5. THE ENDS OF THE CHECK DAM SHALL BE A MINIMUM OF 1'-6" HIGHER THAN THE CENTER OF THE CHECK DAM.

CHECK DAM MAINTENANCE NOTES

1. THE RECOMMENDED INSPECTION FREQUENCY FOR CHECK DAMS IS WEEKLY, DURING AND AFTER ANY STORM EVENT AND MAKE REPAIRS OR CLEAN OUT AS NECESSARY.
2. SEDIMENT ACCUMULATED UPSTREAM OF CHECK DAMS SHALL BE REMOVED WHEN THE SEDIMENT DEPTH UPSTREAM OF CHECK DAM IS WITHIN 1/2 OF THE HEIGHT OF THE CREST.
3. CHECK DAMS ARE TO REMAIN IN PLACE UNTIL THE UPSTREAM DISTURBED AREA IS STABILIZED AND VEGETATED COVER IS APPROVED BY THE COUNTY.
4. WHEN CHECK DAMS ARE REMOVED, EXCAVATIONS SHALL BE FILLED WITH SUITABLE COMPACTED BACKFILL. ANY DISTURBED AREA SHALL BE SEEDED AND MULCHED AND COVERED WITH EROSION CONTROL BLANKET OR OTHERWISE STABILIZED IN A MANNER APPROVED BY THE COUNTY.

CD CHECK DAM 1

COMPOST BLANKET AND COMPOST FILTER BERM

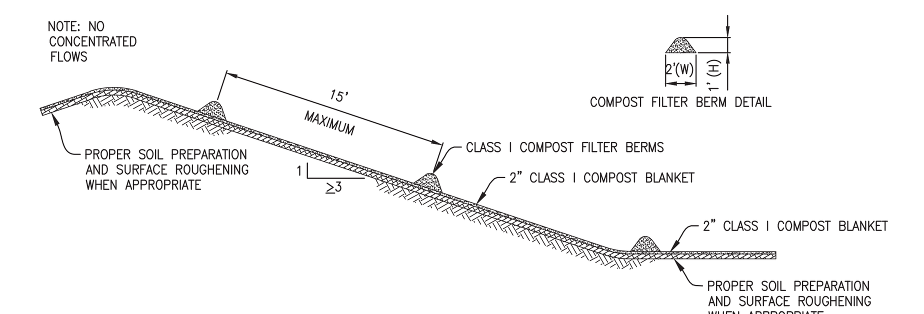

COMPOST BLANKET AND COMPOST FILTER BERM
SCALE: 1" = 5'-0"

COMPOST BLANKET NOTES:

1. SEE PLAN VIEW FOR AREA OF COMPOST BLANKET.
2. MAY BE USED IN PLACE OF STRAW MULCH OR EROSION CONTROL BLANKET IN AREAS WHERE ACCESS IS DIFFICULT DUE TO LANDSCAPING OR OTHER OBJECTS OR IN AREAS WHERE A SMOOTH TURF GRASS FINISH IS DESIRED.
3. SHALL ONLY BE UTILIZED IN AREAS WHERE SHEET FLOW CONDITIONS PREVAIL; SHALL BE PROHIBITED IN AREAS OF POSSIBLE CONCENTRATED FLOW.
4. SOIL PREPARATION SHALL BE COMPLETE PER THE SPECIFICATIONS OUTLINED IN THESE CRITERIA PRIOR TO APPLICATION.
5. WHEN TURF GRASS FINISH IS NOT DESIRED, SURFACE ROUGHENING ON SLOPES SHALL TAKE PLACE PRIOR TO APPLICATION.
6. SHALL BE EVENLY APPLIED AT A DEPTH OF 2 INCH.
7. MAYBE APPLIED UTILIZING PNEUMATIC BLOWER, OR BY HAND.
8. SEEDING SHALL BE DRILLED PRIOR TO THE APPLICATION OF COMPOST OR SEED MAY BE COMBINED AND BLOWN WITH THE PNEUMATIC BLOWER.
9. COMPOST FILTER BERM SHALL BE UTILIZED ON SLOPES WITH A MAXIMUM SPACING OF 15 FEET PER THE REQUIREMENTS FOUND IN THE COMPOST FILTER BERM SECTION.
10. THE RECOMMENDED INSPECTION FREQUENCY IS WEEKLY, DURING AND AFTER ANY STORM EVENT.
11. COMPOST USED IN THE APPLICATION OF THE COMPOST BLANKET SHALL BE A CLASS I COMPOST AS DEFINED BY THE FOLLOWING PHYSICAL, CHEMICAL, AND BIOLOGICAL PARAMETERS:

PARAMETERS	CLASS I COMPOST FOR COMPOST BLANKET
MINIMUM STABILITY INDICATOR	STABLE TO VERY STABLE
SOLUBLE SALTS	MAXIMUM 5mmhos/cm
PH	6.0 - 8.0
AG INDEX	> 10
MATURITY INDICATOR EXPRESSED AS PERCENTAGE OF GERMINATION/VIGOR	80+/80+
MATURITY INDICATOR EXPRESSED AS AMMONIA N/ NITRATE N RATIO	< 4
MATURITY INDICATOR EXPRESSED AS CARBON TO NITROGEN RATIO	20:1
TESTED FOR CLOPYRALID	YES/NEGATIVE RESULT
MOISTURE CONTENT	30-60 %
ORGANIC MATTER CONTENT	25-45 % OF DRY WEIGHT
PARTICLE SIZE DISTRIBUTION	3" (75mm) 100% PASSING 1" (25mm) 95% TO 100% PASSING 3/4" (19mm) 85% TO 90% PASSING 3/8" (9.5mm) 50% TO 60% PASSING #4 20 TO 35% PASSING
PRIMARY, SECONDARY NUTRIENTS; TRACE ELEMENT	MUST BE REPORTED
TESTING AND TEST REPORT SUBMITTAL REQUIREMENTS	STA + CLOPYRALID
ORGANIC MATTER PER CUBIC YARD	MUST REPORT
CHEMICAL CONTAMINANTS	MEET OR EXCEED US EPA CLASS A STANDARD, 40 CFR 503.1 TABLES 1 & 3 LEVELS
MINIMUM MANUFACTURING/PRODUCTION REQUIREMENT	FULLY PERMITTED UNDER COLORADO DEPARTMENT OF PUBLIC HEALTH AND ENVIRONMENT, HAZARDOUS MATERIALS AND WASTE MANAGEMENT DIVISION
RISK FACTOR RELATING TO PLANT GERMINATION AND HEALTH	LOW

NOTE: CLOPYRALID IS THE COMMON NAME OF A HERBICIDE THAT KILLS BROAD-LEAVED WEEDS SUCH AS DANDELIONS, CLOVER AND THISTLE.

CB COMPOST BLANKET 2

COMPOST FILTER BERM NOTES:

1. SEE PLAN VIEW FOR LENGTH OF COMPOST FILTER BERM.
2. SHALL BE APPLIED TO ALL SLOPES RECEIVING A COMPOST BLANKET AT 15' INCREMENTS.
3. FILTER BERMS SHALL RUN PARALLEL TO THE CONTOUR.
4. FILTER BERMS SHALL BE A MINIMUM OF 1' H x 2' W.
5. FILTER BERMS SHALL BE APPLIED UTILIZING PNEUMATIC BLOWER, OR BY HAND.
6. SHALL ONLY BE UTILIZED IN AREAS WHERE SHEET FLOW CONDITIONS PREVAIL; SHALL BE PROHIBITED IN AREAS OF POSSIBLE CONCENTRATED FLOW.
7. SOIL PREPARATION SHALL BE COMPLETE PER THE SPECIFICATIONS OUTLINED IN THESE CRITERIA PRIOR TO APPLICATION.
8. WHEN TURF GRASS FINISH IS NOT DESIRED, SURFACE ROUGHENING ON SLOPES SHALL TAKE PLACE PRIOR TO APPLICATION.
9. SEEDING SHALL BE DRILLED BEFORE THE APPLICATION OF COMPOST OR SEED MAY BE COMBINED AND BLOWN WITH THE PNEUMATIC BLOWER.
10. THE RECOMMENDED INSPECTION FREQUENCY IS WEEKLY, DURING AND AFTER ANY STORM EVENT.
11. COMPOST USED IN THE APPLICATION OF THE COMPOST BLANKET SHALL BE A CLASS I COMPOST AS DEFINED BY THE FOLLOWING PHYSICAL, CHEMICAL, AND BIOLOGICAL PARAMETERS:

PARAMETERS	CLASS I COMPOST FOR COMPOST FILTER BERM
MINIMUM STABILITY INDICATOR	STABLE TO VERY STABLE
SOLUBLE SALTS	MAXIMUM 5mmhos/cm
PH	6.0 - 8.0
AG INDEX	> 10
MATURITY INDICATOR EXPRESSED AS PERCENTAGE OF GERMINATION/VIGOR	80+/80+
MATURITY INDICATOR EXPRESSED AS AMMONIA N/ NITRATE N RATIO	< 4
MATURITY INDICATOR EXPRESSED AS CARBON TO NITROGEN RATIO	20:1
TESTED FOR CLOPYRALID	YES/NEGATIVE RESULT
MOISTURE CONTENT	30-60 %
ORGANIC MATTER CONTENT	25-45 % OF DRY WEIGHT
PARTICLE SIZE DISTRIBUTION	3" (75mm) 100% PASSING 1" (25mm) 95% TO 100% PASSING 3/4" (19mm) 85% TO 90% PASSING 3/8" (9.5mm) 50% TO 60% PASSING #4 20 TO 35% PASSING
PRIMARY, SECONDARY NUTRIENTS; TRACE ELEMENT	MUST BE REPORTED
TESTING AND TEST REPORT SUBMITTAL REQUIREMENTS	STA + CLOPYRALID
ORGANIC MATTER PER CUBIC YARD	MUST REPORT
CHEMICAL CONTAMINANTS	MEET OR EXCEED US EPA CLASS A STANDARD, 40 CFR 503.1 TABLES 1 & 3 LEVELS
MINIMUM MANUFACTURING/PRODUCTION REQUIREMENT	FULLY PERMITTED UNDER COLORADO DEPARTMENT OF PUBLIC HEALTH AND ENVIRONMENT, HAZARDOUS MATERIALS AND WASTE MANAGEMENT DIVISION
RISK FACTOR RELATING TO PLANT GERMINATION AND HEALTH	LOW

NOTE: IF A BIOSOLID COMPOST IS TO BE UTILIZED IT SHALL BE PRODUCED BY A FACILITY IN POSSESSION OF A VALID NOTICE OF AUTHORIZATION (NOA) FOR THE UNRESTRICTED USE AND DISTRIBUTION BY THE COLORADO DEPARTMENT OF PUBLIC HEALTH AND ENVIRONMENT. THE NOA SHALL BE PROVIDED UPON REQUEST TO DOUGLAS COUNTY.

NOTE: A LAB TEST DETAILING THE CHEMICAL, PHYSICAL, AND BIOLOGICAL PARAMETERS SHALL BE PROVIDED UPON REQUEST BY DOUGLAS COUNTY.

CFB COMPOST FILTER BERM 3

CONCRETE WASHOUT AREA (CWA) — 4

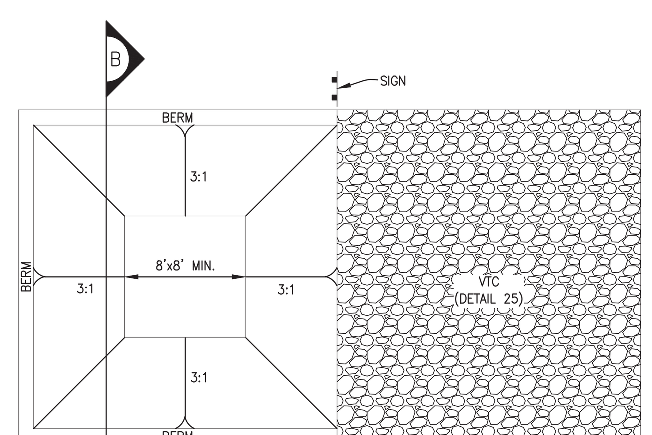

PLAN
SCALE: 1" = 5'-0"

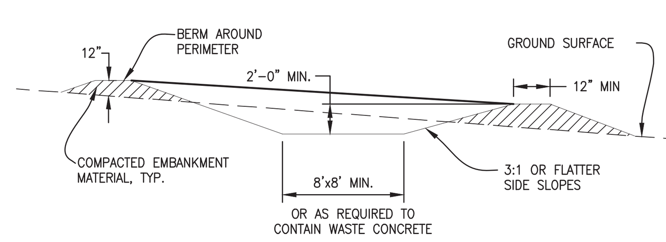

SECTION B
SCALE: 1" = 5'-0"

CONCRETE WASHOUT AREA INSTALLATION NOTES

1. SEE PLAN VIEW FOR:
   - LOCATIONS OF CONCRETE WASHOUT AREA.
2. THE CONCRETE WASHOUT AREA SHALL BE INSTALLED PRIOR TO ANY CONCRETE PLACEMENT ON SITE.
3. VEHICLE TRACKING CONTROL (DETAIL 25) IS REQUIRED AT THE ACCESS POINT.
4. SIGNS SHALL BE PLACED AT THE CONSTRUCTION ENTRANCE, AT THE WASHOUT AREA, AND ELSEWHERE AS NECESSARY TO CLEARLY INDICATE THE LOCATION OF THE CONCRETE WASHOUT AREA TO OPERATORS OF CONCRETE TRUCKS AND PUMP RIGS.
5. EXCAVATED MATERIAL SHALL BE UTILIZED IN PERIMETER BERM CONSTRUCTION.
6. DURABLE PORTABLE CONCRETE WASHOUT BASINS OR TUBS MAY BE USED WITH THE APPROVAL OF THE EROSION CONTROL INSPECTOR.

CONCRETE WASHOUT AREA MAINTENANCE NOTES

1. THE CONCRETE WASHOUT AREA SHALL BE REPAIRED AND ENLARGED OR CLEANED OUT AS NECESSARY TO MAINTAIN CAPACITY FOR WASTED CONCRETE.
2. AT THE END OF CONSTRUCTION, ALL CONCRETE SHALL BE REMOVED FROM THE SITE AND DISPOSED OF AT AN APPROVED WASTE SITE.
3. WHEN THE CONCRETE WASHOUT AREA IS REMOVED, THE DISTURBED AREA SHALL BE DRILL SEEDED AND CRIMP MULCHED OR OTHERWISE STABILIZED IN A MANNER APPROVED BY THE COUNTY.
4. RECOMMENDED INSPECTION FREQUENCY IS WEEKLY, DURING AND AFTER ANY STORM EVENT.

CWA CONCRETE WASHOUT AREA 4

CONSTRUCTION FENCE (CF) — 5

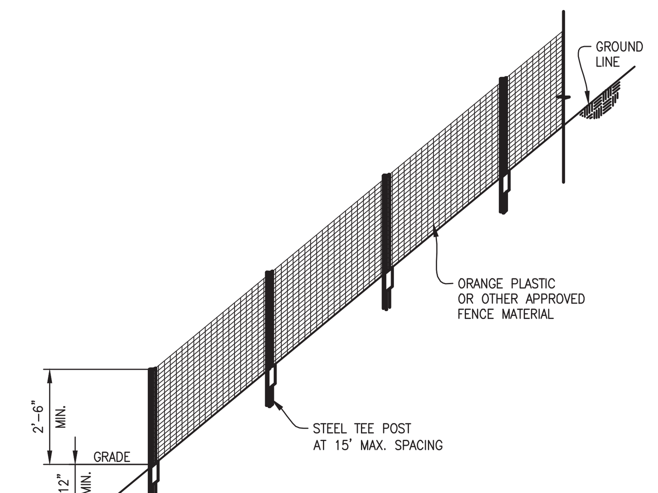

PLAN
SCALE: 1/2" = 1'-0"

CF CONSTRUCTION FENCE 5

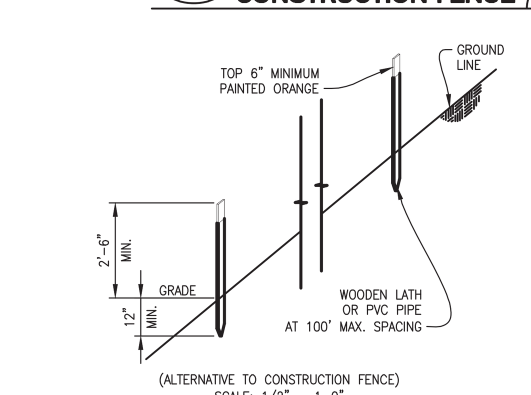

(ALTERNATIVE TO CONSTRUCTION FENCE)
SCALE: 1/2" = 1-0"

CM CONSTRUCTION MARKERS 6

CONSTRUCTION FENCE INSTALLATION NOTES

1. SEE PLAN VIEW FOR:
   - TYPE OF CONSTRUCTION LIMIT INDICATOR (FENCE OR MARKERS).
   - LOCATION AND LENGTH OF FENCE OR LINE OF MARKERS.
2. CONSTRUCTION FENCE OR MARKERS INDICATED ON INITIAL GESC PLAN SHALL BE INSTALLED PRIOR TO OTHER BMPS AND ANY LAND-DISTURBING ACTIVITIES.
3. STEEL TEE POSTS SHALL BE UTILIZED FOR SUPPORT OF CONSTRUCTION FENCE. MAXIMUM SPACING FOR TEE POSTS SHALL BE 15'.

CONSTRUCTION FENCE MAINTENANCE NOTES

1. ANY DAMAGED FENCE OR MARKERS SHALL BE REPAIRED ON A DAILY BASIS.
2. FENCE OR MARKERS SHALL BE REMOVED AT THE END OF CONSTRUCTION. IF ANY DISTURBED AREA EXISTS AFTER FENCE REMOVAL, IT SHALL BE DRILL SEEDED AND CRIMP MULCHED OR OTHERWISE STABILIZED IN A MANNER APPROVED BY THE COUNTY.

CURB SOCK (CS) — 7

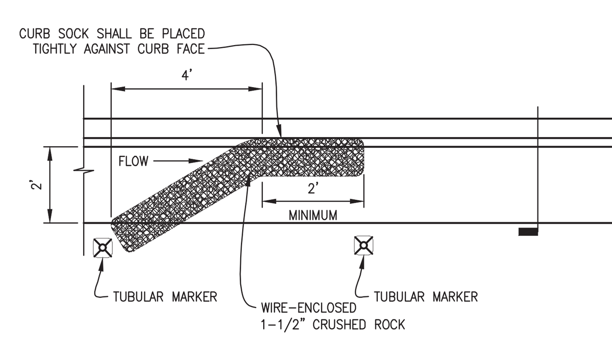

MAXIMUM SPACING ALONG STREET GRADE

STREET SLOPE	CURB SOCK SPACING (FT.)
0.5%	100
1.0%	100
2.0%	75
3.0%	50
4.0%	50
5.0%	50
6.0%	25
7.0%	25
8.0%	25

CURB SOCK INSTALLATION NOTES

1. SEE PLAN VIEW FOR LOCATION OF CURB SOCK.
2. CURB SOCKS INDICATED ON THE GESC PLAN SHALL BE INSTALLED PRIOR TO ANY UPSTREAM LAND DISTURBING ACTIVITIES.
3. CRUSHED ROCK SHALL BE FRACTURED FACE (ALL SIDES) AND SHALL COMPLY WITH THE GRADATION SHOWN ON SHEET 1 (1 ½").
4. WIRE MESH SHALL BE FABRICATED OF 20 GAUGE WIRE TWISTED INTO A MESH WITH A MAXIMUM OPENING OF 1.0 INCH (COMMONLY TERMED "CHICKEN WIRE"). ROLL WIDTH SHALL BE 48 INCHES.
5. WIRE MESH SHALL BE SECURED USING "HOG RINGS" OR WIRE TIES AT 6-INCH CENTERS ALONG ALL JOINTS AND 2-INCH CENTERS ON THE ENDS.
6. TUBULAR MARKERS SHALL MEET REQUIREMENTS OF MANUAL ON UNIFORM TRAFFIC CONTROL DEVICES (MUTCD), AS AMENDED.
7. THE TOP OF THE CURB SOCK SHALL BE ½" TO 1" BELOW TOP OF CURB.
8. CURB SOCK SHALL BE CONSTRUCTED IN ONE PIECE.

CURB SOCK MAINTENANCE NOTES

1. THE RECOMMENDED INSPECTION FREQUENCY FOR CURB SOCKS IS WEEKLY, DURING AND AFTER ANY STORM EVENT AND MAKE REPAIRS OR CLEAN OUT AS NECESSARY.
2. SEDIMENT ACCUMULATED UPSTREAM OF CURB SOCK SHALL BE REMOVED WHEN THE SEDIMENT DEPTH UPSTREAM OF THE CURB SOCK IS WITHIN 2 ½" OF THE CREST.
3. CURB SOCKS ARE TO REMAIN IN PLACE UNTIL THE UPSTREAM DISTURBED AREA IS STABILIZED AND GRASS COVER IS APPROVED, UNLESS THE COUNTY APPROVES EARLIER REMOVAL OF CURB SOCKS IN STREETS.

CS CURB SOCK 7

DEWATERING (DW) — 8

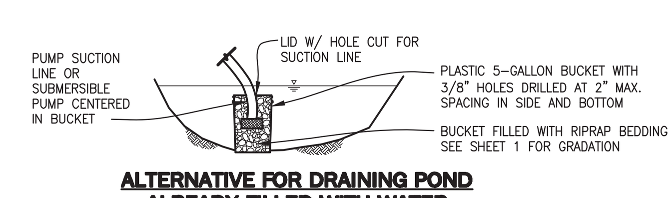

ALTERNATIVE FOR DRAINING POND ALREADY FILLED WITH WATER
SCALE: 1/2" = 1'-0"

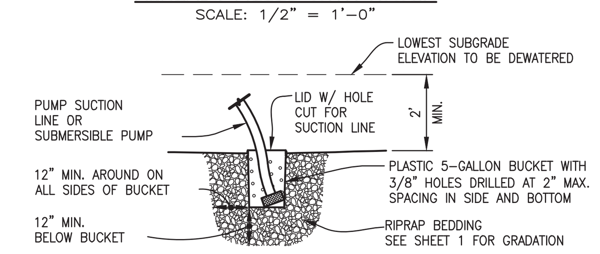

DEWATERING SUMP FOR SUBMERSIBLE PUMP
SCALE: 1/2" = 1'-0"

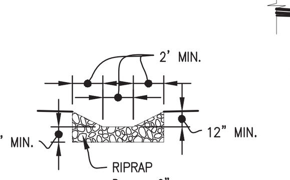

BASIN OUTLET - SECTION C
SCALE: 1" = 5'-0"

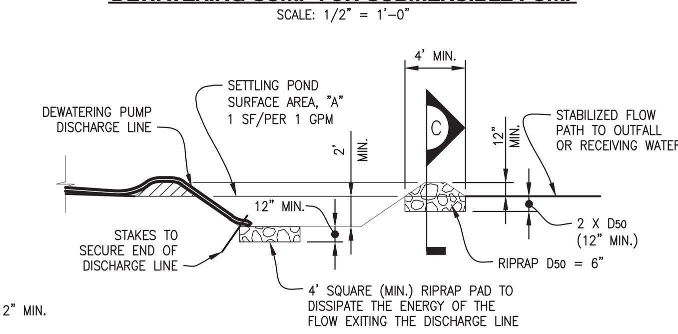

SUMP DISCHARGE SETTLING BASIN
SCALE: 1" = 5'-0"

DEWATERING INSTALLATION NOTES

1. THE PERMITTEE(S) SHALL SCHEDULE AN ONSITE INSPECTION WITH THE EROSION CONTROL INSPECTOR PRIOR TO ANY SITE DEWATERING OPERATIONS BEGIN.
2. THE GESC MANAGER SHALL OBTAIN A CONSTRUCTION DEWATERING PERMIT (DEWATERING PERMIT) FROM THE COLORADO DEPARTMENT OF PUBLIC HEALTH AND ENVIRONMENT (CDPHE) PRIOR TO ANY DEWATERING OPERATIONS THAT REQUIRE A DEWATERING PERMIT.
3. AT A MINIMUM, THE DEWATERING BMPs SHALL CONSIST OF THE FOLLOWING:
   PRE-FILTER ON THE SUCTION END OF THE PUMP/HOSE.
   FILTER BMP PRIOR TO FINAL DISCHARGE, AND
   ENERGY DISSIPATING BMP AT THE DISCHARGE END OF THE HOSE/PUMP.
4. THE TYPE AND PLACEMENT OF DEWATERING CONTROLS SHALL BE COORDINATED WITH, AND APPROVED BY, THE EROSION CONTROL INSPECTOR PRIOR TO THE DISCHARGE OF ANY WATER.

DEWATERING MAINTENANCE NOTES

1. THE RECOMMENDED INSPECTION FREQUENCY IS HOURLY FOR DEWATERING SYSTEMS AND PERFORM ANY NECESSARY REPAIRS OR MAINTENANCE.
2. TEMPORARY SETTLING BASINS SHALL BE REMOVED WHEN NO LONGER NEEDED FOR DEWATERING OPERATIONS. ANY DISTURBED AREA SHALL BE DRILL SEEDED AND CRIMP MULCHED OR OTHERWISE STABILIZED IN A MANNER APPROVED BY THE COUNTY.

DW DEWATERING 8

DIVERSION DITCH (DD) — 9

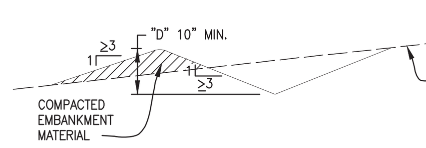

UNLINED
LONGITUDINAL SLOPE ≤ 0.5%
SCALE: 1/2" = 1'-0"

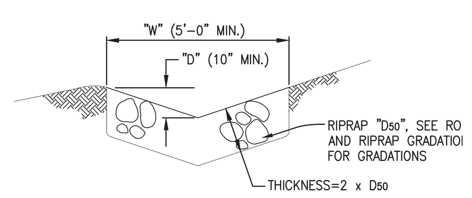

RIPRAP LINED
LONGITUDINAL SLOPE 3% TO 33%
SCALE: 1/2" = 1'-0"

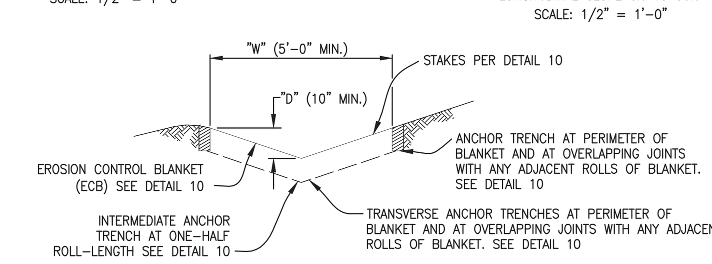

EROSION CONTROL BLANKET (ECB) LINED
LONGITUDINAL SLOPE 0.5% TO 3%
SCALE: 1/2" = 1'-0"

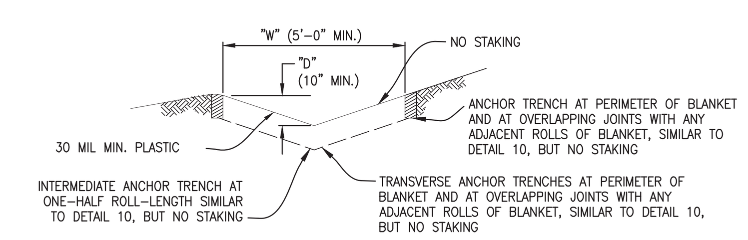

PLASTIC LINED
LONGITUDINAL SLOPE 3% TO 33%
SCALE: 1/2" = 1'-0"

DIVERSION DITCH INSTALLATION NOTES

1. SEE PLAN VIEW FOR:
   - LOCATION OF DIVERSION DITCH.
   - TYPE OF DITCH (UNLINED, ECB LINED, PLASTIC LINED OR RIPRAP LINED).
   - LENGTH OF EACH TYPE OF DITCH.
   - DEPTH, "D", AND WIDTH, "W" DIMENSIONS.
   - FOR ECB LINED DITCH, EROSION CONTROL BLANKET TYPE (SEE DETAIL 10).
   - FOR RIPRAP LINED DITCH, SIZE OF RIPRAP, "D50".
2. SEE DRAINAGE PLANS FOR DETAILS OF ANY PERMANENT CONVEYANCE FACILITIES OR DIVERSION DITCHES EXCEEDING A 2-YEAR FLOW RATE OF 10 CFS.
3. DIVERSION DITCHES INDICATED ON INITIAL GESC PLAN SHALL BE INSTALLED PRIOR TO ANY LAND-DISTURBING ACTIVITIES.
4. FOR ECB LINED DITCHES, INSTALLATION OF EROSION CONTROL BLANKET SHALL CONFORM TO THE REQUIREMENTS OF DETAIL 10.
5. IN LOCATIONS WHERE CONSTRUCTION TRAFFIC MUST CROSS A DIVERSION DITCH, THE PERMITTEES SHALL INSTALL A TEMPORARY CULVERT WITH A MINIMUM DIAMETER OF 12-INCHES.

DIVERSION DITCH MAINTENANCE NOTES

1. THE RECOMMENDED INSPECTION FREQUENCY FOR DIVERSION DITCHES IS WEEKLY, DURING AND AFTER ANY STORM EVENT AND MAKE REPAIRS OR CLEAN OUT AS NECESSARY.
2. DIVERSION DITCHES ARE TO REMAIN IN PLACE UNTIL THE END OF CONSTRUCTION, OR, IF APPROVED BY THE COUNTY, LEFT IN PLACE.
3. IF DIVERSION DITCHES ARE REMOVED, THE DISTURBED AREA SHALL BE DRILL SEEDED AND CRIMP MULCHED OR OTHERWISE STABILIZED IN A MANNER APPROVED BY THE COUNTY.

DD DIVERSION DITCH 9

ROCK AND RIPRAP GRADATIONS

TABLE 1. RIPRAP GRADATIONS

RIPRAP TYPE	D50 MEDIAN STONE SIZE (INCHES)	% OF MATERIAL SMALLER THAN TYPICAL STONE	TYPICAL STONE EQUIVALENT DIAMETER (INCHES)	TYPICAL STONE WEIGHT (POUNDS)
VL	6	70 - 100 50 - 70 35 - 50 2 - 10	12 9 6 2	85 35 10 0.4
L	9	70 - 100 50 - 70 35 - 50 2 - 10	15 12 9 3	160 85 35 1.3
M	12	70 - 100 50 - 70 35 - 50 2 - 10	21 18 12 4	440 275 85 3
H	18	100 50 - 70 35 - 50 2 - 10	30 24 18 6	1280 650 275 10
VH	24	100 50 - 70 35 - 50 2 - 10	42 33 24 9	3500 1700 650 35

TABLE 2. RIPRAP BEDDING

SIEVE SIZE	MASS PERCENT PASSING SQUARE MESH SIEVES — CLASS A
3"	100
1 1/2"	20 - 90
NO. 4	0 - 20
NO. 200	0 - 3

MATCHES SPECIFICATIONS FOR CDOT CLASS A FILTER MATERIAL AND UDFCD TYPE 1 BEDDING. ALL ROCK SHALL BE FRACTURED FACE, ALL SIDES.

TABLE 3. 1 1/2" CRUSHED ROCK

SIEVE SIZE	MASS PERCENT PASSING SQUARE MESH SIEVES — NO. 4
2"	100
1 1/2"	90 - 100
1"	20 - 55
3/4"	0 - 15
3/8"	0 - 5

MATCHES SPECIFICATIONS FOR NO. 4 COARSE AGGREGATE FOR CONCRETE PER AASHTO M43. ALL ROCK SHALL BE FRACTURED FACE, ALL SIDES.

ROCK AND RIPRAP GRADATIONS

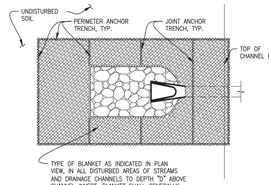

IN DISTURBED AREAS OF STREAMS AND DRAINAGE CHANNELS
SCALE: 1" = 5'-0"

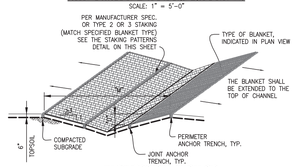

IN DIVERSION DITCH OR SMALL DITCH DRAINAGEWAY
SCALE: 1" = 5'-0"

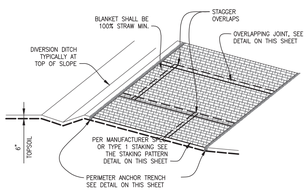

OUTSIDE OF STREAMS AND DRAINAGE CHANNELS
SCALE: 1" = 5'-0"

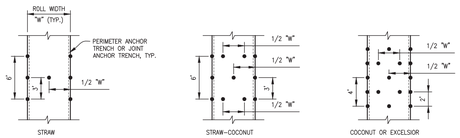

STAKING PATTERNS
SCALE: 1" = 5'-0"
SHALL BE IN ACCORDANCE WITH MANUFACTURER'S SPECIFICATION. IF NO MANUFACTURER'S SPECIFICATION IS AVAILABLE USE THE ACCEPTABLE STAKING PATTERN (AS SHOWN ABOVE).

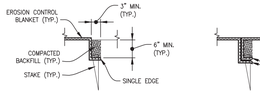

PERIMETER ANCHOR TRENCH
SCALE: 1" = 1'-0"

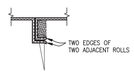

JOINT ANCHOR TRENCH
SCALE: 1" = 1'-0"

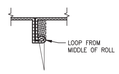

INTERMEDIATE ANCHOR TRENCH
SCALE: 1" = 5'-0"

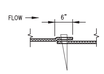

OVERLAPPING JOINT
SCALE: 1" = 1'-0"

WOOD STAKE DETAIL
SCALE: 1" = 1'-0"
MINIMUM THICKNESS 1/2"

EROSION CONTROL BLANKET INSTALLATION NOTES

1. SEE PLAN VIEW FOR:
   - LOCATION OF PERIMETER OF EROSION CONTROL BLANKET.
   - TYPE OF BLANKET (STRAW, STRAW-COCONUT, COCONUT, OR EXCELSIOR).
   - AREA "A" IN SQUARE YARDS OF EACH TYPE OF BLANKET.
2. ALL EROSION CONTROL BLANKETS AND NETTING SHALL BE MADE OF 100% NATURAL AND BIODEGRADABLE MATERIAL; NO PLASTIC OR OTHER SYNTHETIC MATERIAL, EVEN IF PHOTO DEGRADABLE, SHALL BE ALLOWED.
3. IN AREAS WHERE EROSION CONTROL BLANKET IS SHOWN ON THE PLANS, THE PERMITTEE SHALL PLACE TOPSOIL AND PERFORM FINAL GRADING, SURFACE PREPARATION, AND SEEDING BELOW THE BLANKET IN ACCORDANCE WITH THE REQUIREMENTS OF DETAIL 12, SEEDING AND MULCHING. SUBGRADE SHALL BE SMOOTH AND MOIST PRIOR TO BLANKET INSTALLATION AND THE BLANKET SHALL BE IN FULL CONTACT WITH SUBGRADE, NO GAPS OR VOIDS SHALL EXIST UNDER THE BLANKET.
4. PERIMETER ANCHOR TRENCH SHALL BE USED AT OUTSIDE PERIMETER OF ALL BLANKET AREAS.
5. JOINT ANCHOR TRENCH SHALL BE USED TO JOIN ROLLS OF BLANKETS TOGETHER (LONGITUDINALLY AND TRANSVERSELY) FOR ALL BLANKET INSTALLATIONS IN A DRAINAGEWAY EXCEPT STRAW, WHICH MAY USE AN OVERLAPPING JOINT.
6. INTERMEDIATE ANCHOR TRENCH SHALL BE USED AT SPACING OF ONE-HALF THE ROLL LENGTH FOR COCONUT AND EXCELSIOR BLANKETS.
7. THE OVERLAPPING JOINT DETAIL SHALL BE USED TO JOIN ROLLS OF BLANKETS TOGETHER FOR BLANKETS ON SLOPES.
8. MATERIAL SPECIFICATIONS OF EROSION CONTROL BLANKET SHALL CONFORM TO TABLE 7.1.

EROSION CONTROL BLANKET INSTALLATION NOTES – CONTINUED

9. ANY AREAS OF SEEDING AND MULCHING DISTURBED IN THE PROCESS OF INSTALLING EROSION CONTROL BLANKET SHALL BE RESEEDED AND MULCHED IN ACCORDANCE WITH DETAIL 18.
10. SEE DRAINAGE DESIGN PLANS FOR MAJOR DRAINAGEWAY STABILIZATION MEASURES THAT MAY EXCEED THE DESIGN CONDITIONS ASSOCIATED WITH THE DETAILS ABOVE.
11. METAL STAKES OR STAPLES MAY BE USED FOR EROSION CONTROL BLANKET INSTALLATIONS OUTSIDE OF DRAINAGE CHANNELS.

TABLE 7.1 – EROSION CONTROL BLANKET TYPE

TYPE	COCONUT CONTENT	STRAW CONTENT	EXCELSIOR CONTENT	NETTING MIN.
STRAW*	–	100%	–	DOUBLE/NATURAL
STRAW-COCONUT	30% MIN.	70% MAX.	–	DOUBLE/NATURAL
COCONUT	100%	–	–	DOUBLE/NATURAL
EXCELSIOR	–	–	100%	DOUBLE/NATURAL

* FOR OUTSIDE OF STREAMS AND DRAINAGE CHANNELS

EROSION CONTROL BLANKET MAINTENANCE NOTES

1. THE RECOMMENDED INSPECTION FREQUENCY FOR EROSION CONTROL BLANKETS IS WEEKLY, DURING AND AFTER ANY STORM EVENT AND MAKE REPAIRS AS NECESSARY.
2. EROSION CONTROL BLANKET IS TO BE LEFT IN PLACE UNLESS REQUESTED TO BE REMOVED BY THE COUNTY.
3. ANY EROSION CONTROL BLANKET PULLED OUT, TORN, OR OTHERWISE DAMAGED SHALL BE RE-INSTALLED. ANY SUBGRADE AREAS BELOW THE BLANKET THAT HAVE ERODED TO CREATE A VOID UNDER THE BLANKET, OR THAT REMAIN DEVOID OF GRASS SHALL BE REPAIRED, RESEEDED AND MULCHED AND THE EROSION CONTROL BLANKET REINSTALLED.

ECB **EROSION CONTROL BLANKET** 10

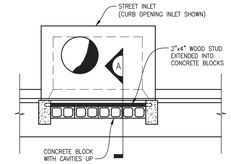

INTERIM CONFIGURATION (BEFORE PAVING) STREET INLET - PLAN
SCALE: 1/2" = 1'-0"

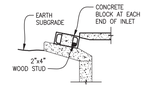

SECTION A
SCALE: 1/2" = 1'-0"

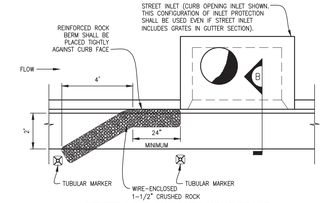

STREET INLET ON CONTINUOUS GRADE (AFTER PAVING) - PLAN
SCALE: 1/2" = 1'-0"

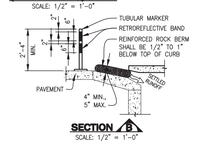

SECTION B
SCALE: 1/2" = 1'-0"

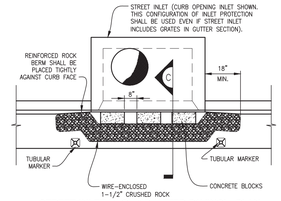

STREET INLET IN SUMP (AFTER PAVING) - PLAN
SCALE: 1/2" = 1'-0"

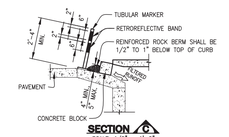

SECTION C
SCALE: 1/2" = 1'-0"

JOINT DETAIL
SCALE: 1/2" = 1'-0"

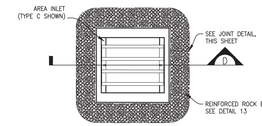

AREA INLET - PLAN
SCALE: 1/2" = 1'-0"

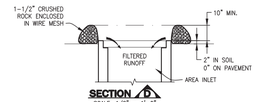

SECTION D
SCALE: 1/2" = 1'-0"

INLET PROTECTION INSTALLATION NOTES

1. INTERIM CONFIGURATION OF INLET PROTECTION IN STREETS SHALL BE INSTALLED WITHIN 48-HOURS OF POURING INLET. INLET PROTECTION (AFTER PAVEMENT) SHALL BE INSTALLED WITHIN 48 HOURS AFTER PAVING IS PLACED.
2. INLET PROTECTION AT AREA INLETS SHALL BE INSTALLED WITHIN 48-HOURS OF POURING INLET.
3. CRUSHED ROCK SHALL BE FRACTURED FACE (ALL SIDES) AND SHALL COMPLY WITH GRADATION SHOWN ON ROCK AND RIPRAP GRADATIONS (1-1/2").
4. WIRE MESH SHALL BE FABRICATED OF 20 GAUGE WIRE TWISTED INTO A MESH WITH A MAXIMUM OPENING OF 1.0 INCH (COMMONLY TERMED "CHICKEN WIRE"). ROLL WIDTH SHALL BE 48-INCHES.
5. WIRE MESH SHALL BE SECURED USING "HOG RINGS" OR WIRE TIES AT 6-INCH CENTERS ALONG ALL JOINTS AND AT 2-INCH CENTERS ON ENDS OF BERM.
6. REINFORCED ROCK BERM SHALL BE CONSTRUCTED IN ONE PIECE OR SHALL BE CONSTRUCTED USING JOINT DETAIL.
7. TUBULAR MARKERS SHALL MEET REQUIREMENTS OF MANUAL ON UNIFORM TRAFFIC CONTROL DEVICES (MUTCD), AS AMENDED.
8. THE TOP OF REINFORCED ROCK BERM SHALL BE 1/2"-1" BELOW TOP OF CURB.

INLET PROTECTION MAINTENANCE NOTES

1. THE RECOMMENDED INSPECTION FREQUENCY FOR INLET PROTECTION IS WEEKLY, DURING AND AFTER ANY STORM EVENT AND MAKE REPAIRS OR CLEAN OUT AS NECESSARY. MORE FREQUENT INSPECTIONS AND REPAIRS MAY BE REQUIRED DURING WINTER CONDITIONS DUE TO FREEZE/THAW PROBLEMS.
2. SEDIMENT ACCUMULATED UPSTREAM OF INLET PROTECTION SHALL BE REMOVED WHEN THE SEDIMENT DEPTH UPSTREAM OF ROCK BERM IS WITHIN 2-1/2 INCHES OF THE CREST.
3. INLET PROTECTION IS TO REMAIN IN PLACE UNTIL THE UPSTREAM DISTURBED AREA IS STABILIZED AND GRASS COVER IS APPROVED, UNLESS THE COUNTY APPROVES EARLIER REMOVAL OF INLET PROTECTION IN STREETS.
4. WHEN INLET PROTECTION AT AREA INLETS ARE REMOVED, THE DISTURBED AREA SHALL BE DRILL SEEDED AND CRIMP MULCHED OR OTHERWISE STABILIZED IN A MANNER APPROVED BY THE COUNTY.

IP **INLET PROTECTION** 11

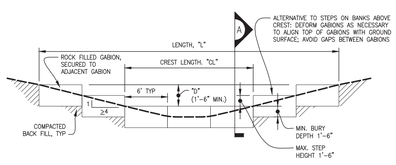

REINFORCED - ELEVATION
SCALE: 1" = 5'-0"

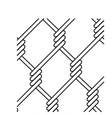

BLOW UP OF TWISTED WIRE GABION
SCALE: NTS

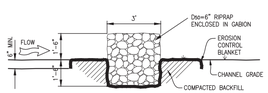

REINFORCED - SECTION A
SCALE: 1/2" = 1'-0"

REINFORCED CHECK DAM INSTALLATION NOTES

1. SEE PLAN VIEW FOR:
   - LOCATIONS OF CHECK DAMS.
   - CHECK DAM TYPE (CHECK DAM OR REINFORCED CHECK DAM).
   - LENGTH, "L", CREST LENGTH, "CL", AND DEPTH, "D".
2. CHECK DAMS INDICATED ON INITIAL GESC PLAN SHALL BE INSTALLED AFTER CONSTRUCTION FENCE, BUT PRIOR TO ANY UPSTREAM LAND-DISTURBING ACTIVITIES.
3. REINFORCED CHECK DAMS, GABIONS SHALL HAVE GALVANIZED TWISTED WIRE NETTING WITH A MAXIMUM OPENING DIMENSION OF 4-1/2" AND A MINIMUM WIRE THICKNESS OF 0.10". WIRE "HOG RINGS" AT 4" SPACING OR OTHER APPROVED MEANS SHALL BE USED AT ALL GABION SEAMS AND TO SECURE THE GABION TO THE ADJACENT GABION.
4. THE CHECK DAM SHALL BE TRENCHED INTO THE GROUND A MINIMUM OF 1'-6".
5. EROSION BLANKET SHALL BE PLACED IN THE REINFORCED CHECK DAM TRENCH EXTENDING A MINIMUM OF 1'-6" ON BOTH THE UPSTREAM AND DOWNSTREAM SIDES OF THE REINFORCED CHECK DAM.

REINFORCED CHECK DAM MAINTENANCE NOTES

1. THE RECOMMENDED INSPECTION FREQUENCY FOR CHECK DAMS IS WEEKLY, DURING AND AFTER ANY STORM EVENT AND MAKE REPAIRS OR CLEAN OUT AS NECESSARY.
2. SEDIMENT ACCUMULATED UPSTREAM OF CHECK DAMS SHALL BE REMOVED WHEN THE SEDIMENT DEPTH UPSTREAM OF CHECK DAM IS WITHIN 1/2 OF THE HEIGHT OF THE CREST.
3. CHECK DAMS ARE TO REMAIN IN PLACE UNTIL THE UPSTREAM DISTURBED AREA IS STABILIZED AND GRASS COVER IS APPROVED BY THE COUNTY.
4. WHEN CHECK DAMS ARE REMOVED, EXCAVATIONS SHALL BE FILLED WITH SUITABLE COMPACTED BACK FILL. ANY DISTURBED AREA SHALL BE DRILL SEEDED AND CRIMP MULCHED AND COVERED WITH EROSION CONTROL BLANKET OR OTHERWISE STABILIZED IN A MANNER APPROVED BY THE COUNTY.

RCD **REINFORCED CHECK DAM** 12

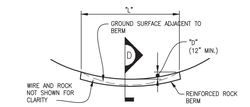

ELEVATION
SCALE: 1" = 5'-0"

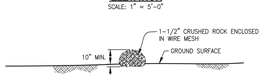

SECTION D
SCALE: 1/2" = 1'-0"

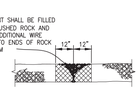

JOINT DETAIL
SCALE: 1/2" = 1'-0"

REINFORCED ROCK BERM INSTALLATION NOTES

1. SEE PLAN VIEW FOR:
   - LOCATIONS OF REINFORCED ROCK BERMS.
   - LENGTH, "L", AND DEPTH, "D" DIMENSIONS.
2. REINFORCED ROCK BERM SECTION APPLIES TO CULVERT INLET FILTER AND INLET PROTECTION.
3. CRUSHED ROCK SHALL BE FRACTURED FACE (ALL SIDES) AND SHALL COMPLY WITH GRADATION SHOWN ON ROCK AND RIPRAP GRADATIONS (1-1/2").
4. WIRE MESH SHALL BE FABRICATED OF 20 GAUGE WIRE TWISTED INTO A MESH WITH A MAXIMUM OPENING OF 1.0 INCH (COMMONLY TERMED "CHICKEN WIRE"). ROLL WIDTH SHALL BE 48-INCHES.
5. WIRE MESH SHALL BE SECURED USING "HOG RINGS" OR WIRE TIES AT 6-INCH CENTERS ALONG ALL JOINTS AND AT 2-INCH CENTERS ON ENDS OF BERM.
6. FOR CONCENTRATED FLOW AREAS THE ENDS OF THE REINFORCED ROCK BERM SHALL BE 12" HIGHER THAN THE CENTER OF THE BERM.

REINFORCED ROCK BERM MAINTENANCE NOTES

1. THE RECOMMENDED INSPECTION FREQUENCY FOR REINFORCED ROCK BERM IS WEEKLY, DURING AND AFTER ANY STORM EVENT AND MAKE REPAIRS OR CLEAN OUT AS NECESSARY.
2. SEDIMENT ACCUMULATED UPSTREAM OF REINFORCED ROCK BERM SHALL BE REMOVED WHEN THE SEDIMENT DEPTH UPSTREAM OF FILTER IS WITHIN 5 INCHES OF THE CREST.
3. REINFORCED ROCK BERMS ARE TO REMAIN IN PLACE UNTIL THE UPSTREAM DISTURBED AREA IS STABILIZED AND GRASS COVER IS APPROVED.
4. WHEN REINFORCED ROCK BERMS ARE REMOVED, ANY DISTURBED AREA SHALL BE DRILL SEEDED AND CRIMP MULCHED OR OTHERWISE STABILIZED IN A MANNER APPROVED BY THE COUNTY.

RRB **REINFORCED ROCK BERM** 13

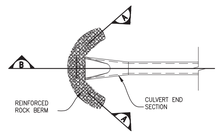

PLAN
SCALE: 1" = 5'-0"

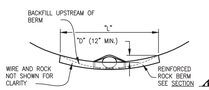

SECTION A
SCALE: 1" = 5'-0"

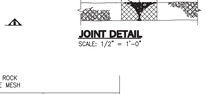

JOINT DETAIL
SCALE: 1/2" = 1'-0"

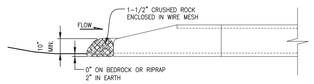

SECTION B
SCALE: 1/2" = 1'-0"

INSTALLATION NOTES

1. SEE PLAN VIEW FOR:
   - LOCATIONS OF CULVERT INLET FILTERS.
   - LENGTH, "L", AND DEPTH, "D".
2. CRUSHED ROCK SHALL BE FRACTURED FACE (ALL SIDES) AND SHALL COMPLY WITH GRADATION SHOWN ON ROCK AND RIPRAP GRADATIONS (1-1/2").
3. WIRE MESH SHALL BE FABRICATED OF 20 GAUGE WIRE TWISTED INTO A MESH WITH A MAXIMUM OPENING OF 1.0 INCH (COMMONLY TERMED "CHICKEN WIRE"). ROLL WIDTH SHALL BE 48-INCHES.
4. WIRE MESH SHALL BE SECURED USING "HOG RINGS" OR WIRE TIES AT 6-INCH CENTERS ALONG ALL JOINTS AND AT 2-INCH CENTERS ON ENDS OF BERM.
5. THE ENDS OF THE REINFORCED ROCK BERM SHALL BE 12" HIGHER THAN THE CENTER OF THE BERM.

MAINTENANCE NOTES

1. THE RECOMMENDED INSPECTION FREQUENCY FOR RRB FOR CULVERT PROTECTION IS WEEKLY, DURING AND AFTER ANY STORM EVENT AND MAKE REPAIRS OR CLEAN OUT AS NECESSARY.
2. SEDIMENT ACCUMULATED UPSTREAM OF RRB FOR CULVERT PROTECTION SHALL BE REMOVED WHEN THE SEDIMENT DEPTH UPSTREAM OF FILTER IS 1/2 THE HEIGHT OF THE REINFORCED ROCK BERM.
3. RRB FOR CULVERT PROTECTION ARE TO REMAIN IN PLACE UNTIL THE UPSTREAM DISTURBED AREA IS STABILIZED AND GRASS COVER IS APPROVED BY THE COUNTY.
4. WHEN RRB FOR CULVERT PROTECTION ARE REMOVED, ANY DISTURBED AREA SHALL BE DRILL SEEDED AND CRIMP MULCHED OR OTHERWISE STABILIZED IN A MANNER APPROVED BY THE COUNTY.

RRC **RRB FOR CULVERT PROTECTION** 14

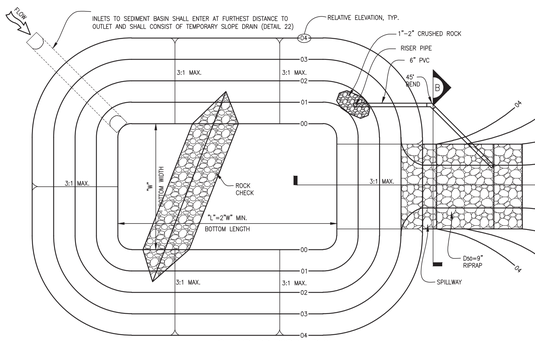

STANDARD BASIN - PLAN
SCALE: 1" = 5'-0"

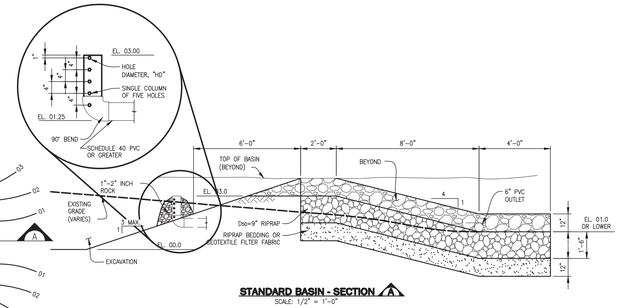

STANDARD BASIN - SECTION A
SCALE: 1/2" = 1'-0"

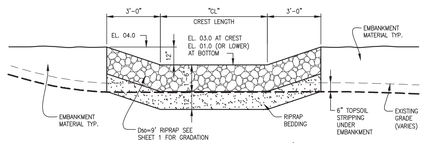

STANDARD BASIN - SECTION B
SCALE: 1/2" = 1'-0"

SEDIMENT BASIN INSTALLATION NOTES

1. SEE PLAN VIEW FOR:
   - LOCATION OF SEDIMENT BASIN.
   - TYPE OF BASIN (STANDARD BASIN OR NON-STANDARD BASIN).
   - FOR STANDARD BASIN, CREST LENGTH, "CL", BOTTOM WIDTH, "W", AND HOLE DIAMETER, "HD".
   - FOR NON-STANDARD BASIN, SEE CONSTRUCTION DRAWINGS FOR DESIGN OF BASIN INCLUDING RISER HEIGHT, "H", NUMBER OF COLUMNS, "N", HOLE DIAMETER, "HD", AND PIPE DIAMETER "D".
2. FOR STANDARD BASIN, BOTTOM DIMENSION MAY BE MODIFIED AS LONG AS BOTTOM AREA IS NOT REDUCED.
3. SEDIMENT BASINS INDICATED ON INITIAL GESC PLAN SHALL BE INSTALLED PRIOR TO ANY OTHER LAND-DISTURBING ACTIVITY.
4. EMBANKMENT MATERIAL SHALL CONSIST OF SOIL FREE OF DEBRIS, ORGANIC MATERIAL, AND ROCKS OR CONCRETE GREATER THAN 3 INCHES AND SHALL HAVE A MINIMUM OF 15 PERCENT BY WEIGHT PASSING THE NO. 200 SIEVE.
5. EMBANKMENT MATERIAL SHALL BE COMPACTED TO AT LEAST 95 PERCENT OF MAXIMUM DENSITY WITHIN 2 PERCENTAGE POINTS OF OPTIMUM DENSITY IN ACCORDANCE WITH ASTM D698.
6. PIPE SCH 40 OR GREATER SHALL BE USED.
7. THE DETAILS SHOWN ON THIS SHEET PERTAIN TO STANDARD SEDIMENT BASIN(S) IDENTIFIED ON THE GESC PLAN VIEW DRAWINGS USED FOR DRAINAGE AREAS LESS THAN 15 ACRES. SEE CONSTRUCTION DRAWINGS FOR EMBANKMENT, STORAGE VOLUME, SPILLWAY, OUTLET, AND OUTLET PROTECTION DETAILS FOR ANY SEDIMENT BASIN(S) THAT HAVE BEEN INDIVIDUALLY DESIGNED FOR DRAINAGE AREAS LARGER THAN 15 ACRES.

SEDIMENT BASIN MAINTENANCE NOTES

1. THE RECOMMENDED INSPECTION FREQUENCY FOR SEDIMENT BASIN IS WEEKLY, DURING AND AFTER ANY STORM EVENT AND MAKE REPAIRS OR CLEAN OUT AS NECESSARY.
2. SEDIMENT ACCUMULATED IN SEDIMENT BASIN SHALL BE REMOVED WHEN THE SEDIMENT DEPTH IS 1.0 FOOT.
3. SEDIMENT BASINS ARE TO REMAIN IN PLACE UNTIL THE UPSTREAM DISTURBED AREA IS STABILIZED AND GRASS COVER IS APPROVED BY THE COUNTY.
4. IF SEDIMENT BASINS ARE REMOVED, THE DISTURBED AREA SHALL BE SEEDED AND MULCHED OR OTHERWISE STABILIZED IN A MANNER APPROVED BY THE COUNTY.

SIZING INFORMATION FOR STANDARD SEDIMENT BASIN

Upstream Drainage Area (rounded to nearest acre), (ac)	Basin Bottom Width (W), (ft)	Spillway Crest Length (CL), (ft)	Hole Diameter (HD), (in)
1	16	2.0	7/16
2	22	4.0	5/8
3	27	6.0	3/4
4	31	8.0	7/8
5	35	10.0	1.0
6	38	12.0	1 1/8
7	41	14.0	1 1/4
8	44	16.0	1 1/4
9	47	18.0	1 3/8
10	49	20.0	1 3/8
11	52	22.0	1 1/2
12	54	24.0	1 1/2
13	56	26.0	1 5/8
14	59	28.0	1 5/8
15	61	30.0	1 5/8

SB **SEDIMENT BASIN** 15

Sheet Revisions		
1	DOUGLAS COUNTY REISSUE	1/17

NOTE: SCALES SHOWN ARE FOR 24"x36" SHEETS; ADJUST ACCORDINGLY FOR 11"x17" SHEETS.

DOUGLAS COUNTY COLORADO

GESC GRADING, EROSION, AND SEDIMENT CONTROL

GESC PLAN STANDARD NOTES AND DETAILS

SHEET 2 OF 3

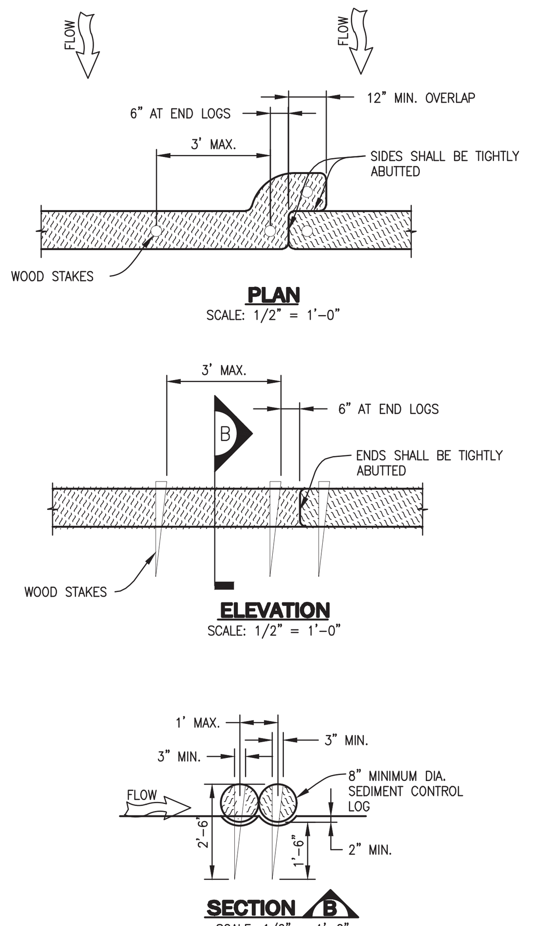

SEDIMENT CONTROL LOG INSTALLATION NOTES

1. SEE PLAN VIEW FOR:
   - LOCATION AND LENGTH OF SEDIMENT CONTROL LOG.
2. SEDIMENT CONTROL LOGS INDICATED ON INITIAL GESC PLAN SHALL BE INSTALLED PRIOR TO ANY LAND-DISTURBING ACTIVITIES.
3. SEDIMENT CONTROL LOGS SHALL CONSIST OF STRAW, COMPOST, EXCELSIOR, OR COCONUT FIBER.
4. NOT FOR USE IN CONCENTRATED FLOW AREAS.
5. THE SEDIMENT CONTROL LOG SHALL BE TRENCHED INTO THE GROUND A MINIMUM OF 2".

SEDIMENT CONTROL LOG MAINTENANCE NOTES

1. THE RECOMMENDED INSPECTION FREQUENCY FOR SEDIMENT CONTROL LOGS IS DAILY, DURING AND AFTER ANY STORM EVENT AND MAKE REPAIRS OR CLEAN OUT UPSTREAM SEDIMENT AS NECESSARY.
2. SEDIMENT ACCUMULATED UPSTREAM OF SEDIMENT CONTROL LOGS SHALL BE REMOVED WHEN THE UPSTREAM SEDIMENT DEPTH IS WITHIN ½ THE HEIGHT OF THE CREST OF LOG.
3. SEDIMENT CONTROL LOG SHALL REMAIN IN PLACE UNTIL THE VEGETATIVE COVER IS APPROVED BY THE EROSION CONTROL INSPECTOR. IF ANY DISTURBED AREA EXISTS AFTER REMOVAL, IT SHALL BE DRILL SEEDED AND CRIMP MULCHED OR OTHERWISE STABILIZED IN A MANNER APPROVED BY THE COUNTY.

SCL SEDIMENT CONTROL LOG 16

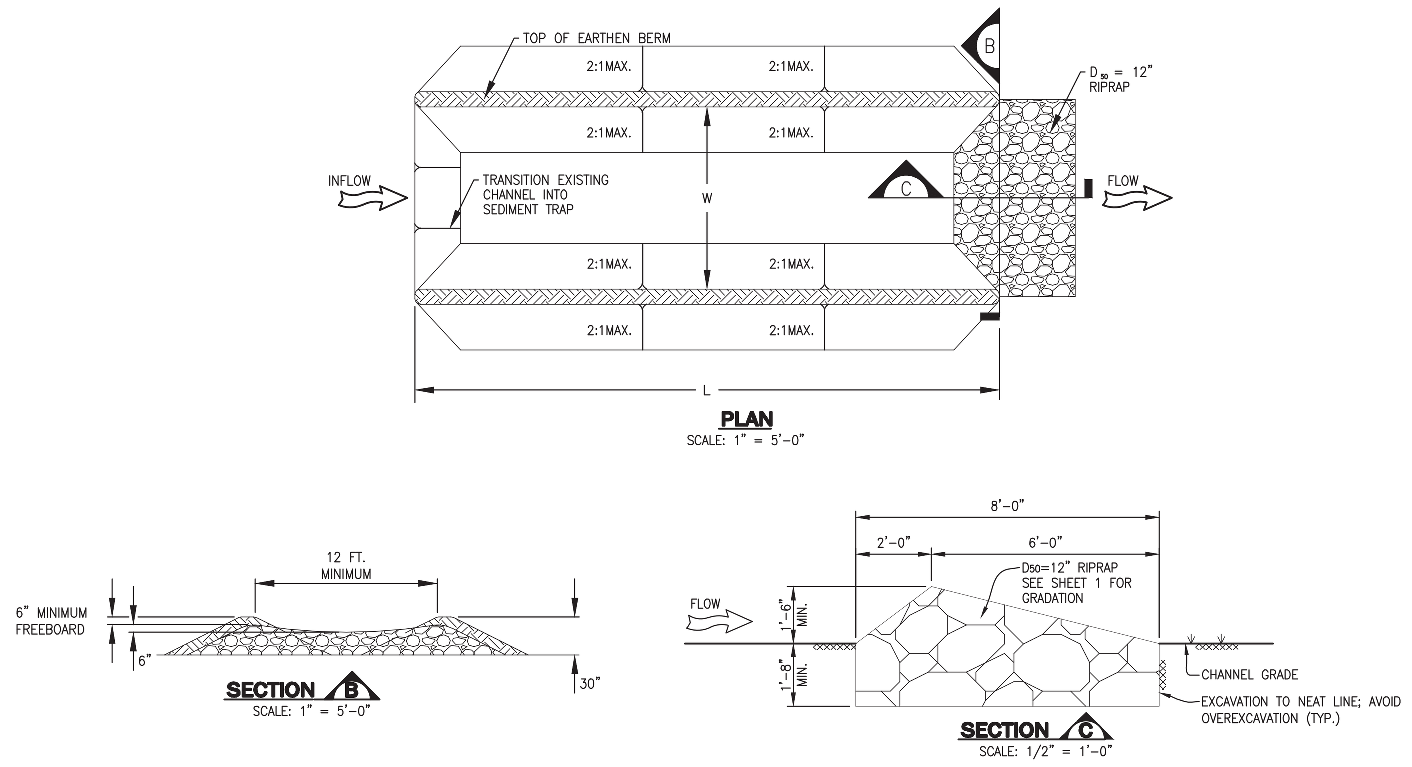

SEDIMENT TRAP INSTALLATION NOTES

1. SEE PLAN VIEW FOR:
   - LOCATION, LENGTH AND WIDTH OF SEDIMENT TRAP.
2. SEDIMENT TRAPS INDICATED ON INITIAL GESC PLAN SHALL BE INSTALLED PRIOR TO ANY LAND-DISTURBING ACTIVITIES.
3. SEDIMENT TRAP BERM SHALL BE CONSTRUCTED FROM MATERIAL FROM EXCAVATION. THE BERM SHALL BE COMPACTED TO 95% OF THE MAXIMUM DENSITY IN ACCORDANCE WITH ASTM D698.
4. RIPRAP OUTLET SHALL BE CONSTRUCTED WITH D_{50} =12" RIPRAP WITH A MINIMUM OVERFLOW OF 6".
5. THE TOP OF THE EARTHEN BERM SHALL BE A MINIMUM OF 6" HIGHER THAN THE TOP OF THE RIPRAP OUTLET STRUCTURE.
6. THE ENDS OF THE RIPRAP OUTLET STRUCTURE SHALL BE MINIMUM OF 6" HIGHER THAN THE CENTER OF THE OUTLET STRUCTURE.

SEDIMENT TRAP MAINTENANCE NOTES

1. THE RECOMMENDED INSPECTION FREQUENCY FOR SEDIMENT TRAPS IS WEEKLY, DURING AND AFTER ANY STORM EVENT AND MAKE REPAIRS OR CLEAN OUT UPSTREAM SEDIMENT AS NECESSARY.
2. SEDIMENT ACCUMULATED UPSTREAM OF RIPRAP SHALL BE REMOVED WHEN THE UPSTREAM SEDIMENT DEPTH IS WITHIN ½ THE HEIGHT OF THE RIPRAP OUTLET STRUCTURE.
3. SEDIMENT TRAPS SHALL REMAIN IN PLACE UNTIL THE UPSTREAM DISTURBED AREA IS STABILIZED AND GRASS COVERAGE IS APPROVED BY THE COUNTY.
4. WHEN SEDIMENT TRAPS ARE REMOVED THE DISTURBED AREA SHALL BE DRILLED SEEDED AND CRIMP MULCHED OR STABILIZED IN A MANNER APPROVED BY THE COUNTY.

ST SEDIMENT TRAP 17

SEEDING AND MULCHING INSTALLATION NOTES

1. SEE PLAN VIEW FOR:
   - AREA OF SEEDING AND MULCHING.
   - TYPE OF SEED MIX (PERMANENT, TEMPORARY, OR LOW-GROWTH).
2. ALL BRANDS FURNISHED SHALL BE FREE FROM SUCH NOXIOUS SEEDS AS RUSSIAN OR CANADIAN THISTLE, COARSE FESCUE, EUROPEAN BINDWEED, JOHNSON GRASS, KNAP WEED AND LEAFY SPURGE.
3. THE SEEDER SHALL FURNISH TO THE CONTRACTOR A SIGNED STATEMENT CERTIFYING THAT THE SEED FURNISHED IS FROM A LOT THAT HAS BEEN TESTED BY A RECOGNIZED LABORATORY. SEED WHICH HAS BECOME WET, MOLDY, OR OTHERWISE DAMAGED IN TRANSIT OR IN STORAGE WILL NOT BE ACCEPTABLE. SEED TICKETS SHALL BE PROVIDED TO DOUGLAS COUNTY UPON REQUEST.
4. DRILL SEEDING MIX SHALL CONFORM TO THE TABLE ON THE RIGHT:
5. IF THE SEED AVAILABLE ON THE MARKET DOES NOT MEET THE MINIMUM PURITY AND GERMINATION PERCENTAGES SPECIFIED, THE SUBCONTRACTOR MUST COMPENSATE FOR A LESSER PERCENTAGE OF PURITY OR GERMINATION BY FURNISHING SUFFICIENT ADDITIONAL SEED TO EQUAL THE SPECIFIED PRODUCT. THE TAGS FROM THE SEED MIXES MUST BE SUPPLIED TO THE CONTRACTOR AND FORWARDED TO THE DOUGLAS COUNTY EROSION CONTROL INSPECTOR.
6. THE FORMULA USED FOR DETERMINING THE QUANTITY OF PURE LIVE SEED (PLS) SHALL BE (POUNDS OF SEED) X (PURITY) X (GERMINATION) = POUNDS OF PURE LIVE SEED (PLS).
7. PERMANENT SEED MIX SHALL BE USED UNLESS OTHERWISE APPROVED BY THE COUNTY.
8. ALL AREAS TO BE SEEDED AND MULCHED SHALL HAVE NATIVE TOPSOIL OR APPROVED SOIL AMENDMENTS SPREAD TO A DEPTH OF AT LEAST 6 INCHES (LOOSE DEPTH). HAUL ROADS AND OTHER COMPACTED AREAS SHALL BE LOOSENED TO A DEPTH OF 6 INCHES PRIOR TO SPREADING TOPSOIL.
9. SOIL IS TO BE THOROUGHLY LOOSENED (TILLED) TO A DEPTH OF AT LEAST 6 INCHES PRIOR TO SEEDING. THE TOP 6 INCHES OF THE SEED BED SHALL BE FREE OF ROCKS GREATER THAN 4 INCHES AND SOIL CLODS GREATER THAN 2 INCHES. SEEDING OVER ANY COMPACTED AREAS THAT HAVEN'T BEEN THOROUGHLY LOOSENED SHALL BE REJECTED.
10. SEED IS TO BE APPLIED USING A MECHANICAL DRILL TO A DEPTH NOT LESS THAN 1/4 INCH AND NOT MORE THAN 3/4 INCH. ROW SPACING SHALL BE NO MORE THAN 6 INCHES. MATERIAL USED FOR MULCH SHALL CONSIST OF LONG-STEMMED STRAW. AT LEAST 50 PERCENT OF THE MULCH, BY WEIGHT, SHALL BE 10 INCHES OR MORE IN LENGTH. MULCH SHALL BE APPLIED AND MECHANICALLY ANCHORED TO A DEPTH OF AT LEAST 2 INCHES. MULCH SHALL BE APPLIED AT A RATE OF 4000 LB. OF STRAW PER ACRE.
11. IF THE PERMITTEE DEMONSTRATES TO THE COUNTY THAT IT IS NOT POSSIBLE TO DRILL SEED, SEED IS TO BE UNIFORMLY BROADCAST AT TWO TIMES THE DRILLED RATE, THEN LIGHTLY HARROWED TO PROVIDE A SEED DEPTH OF APPROXIMATELY 1/4 INCH, THEN ROLLED TO COMPACT, THEN MULCHED AS SPECIFIED ABOVE.
12. SEEDING AND MULCHING SHALL BE COMPLETED WITHIN 30 DAYS OF INITIAL EXPOSURE OR 14 DAYS AFTER GRADING IS SUBSTANTIALLY COMPLETE IN A GIVEN AREA (AS DEFINED BY THE COUNTY). THIS MAY REQUIRE MULTIPLE MOBILIZATIONS FOR SEEDING AND MULCHING.
13. MULCH SHALL BE APPLIED WITHIN 24-HOURS OF SEEDING.
14. TACKIFIER SHOULD BE UTILIZED TO HELP PREVENT STRAW DISPLACEMENT.

SEEDING AND MULCHING MAINTENANCE NOTES

1. SEEDED AND MULCHED AREAS SHALL BE INSPECTED FOR REQUIRED COVERAGE MONTHLY FOR A PERIOD OF TWO YEARS FOLLOWING INITIAL SEEDING. REPAIRS AND RE-SEEDING AND MULCHING SHALL BE UNDERTAKEN AFTER THE FIRST GROWING SEASON FOR ANY AREAS FAILING TO MEET THE REQUIRED COVERAGE.
2. REQUIRED COVERAGE FOR STANDARD, OPEN SPACE AND LOW GROWTH SEED MIXES SHALL BE DEFINED AS FOLLOWS:
   1. THREE (3) PLANTS PER SQUARE FOOT WITH A MINIMUM HEIGHT OF 3 INCHES. THE 3 PLANTS PER SQUARE FOOT SHALL BE OF THE VARIETY AND SPECIES FOUND IN THE DOUGLAS COUNTY-APPROVED MIX.
   2. NO BARE AREAS LARGER THAN 4 SQUARE FEET (TWO-FEET BY TWO-FEET OR EQUIVALENT).
   3. FREE OF ERODED AREAS.
   4. FREE FROM INFESTATION OF NOXIOUS WEEDS IN ACCORDANCE WITH SECTION 6.4 OF THE GESC MANUAL.
3. REQUIRED COVERAGE FOR TURF GRASS AREAS SHALL BE DEFINED AS FOLLOWS:
   1. AT LEAST 80% VEGETATIVE COVER OF GRASS SPECIES PLANTED.
   2. NO BARE AREAS LARGER THAN 4 SQUARE FEET (TWO-FEET BY TWO-FEET OR EQUIVALENT).
   3. FREE OF ERODED AREAS.
   4. FREE FROM INFESTATION OF NOXIOUS WEEDS IN ACCORDANCE WITH SECTION 6.4 OF THE GESC MANUAL.
4. RILL AND GULLY EROSION SHALL BE FILLED WITH TOPSOIL PRIOR TO RESEEDING. THE RESEEDING METHOD SHALL BE APPROVED BY THE COUNTY.

DOUGLAS COUNTY PERMANENT DRILL SEEDING MIX

SPECIES	VARIETY	NOTES	% IN MIX	POUNDS OF PLS PER ACRE
BIG BLUESTEM	KAW	PNWS	10	1.1
YELLOW INDIANGRASS	CHEYENNE	PNWS	10	1
SWITCHGRASS	BLACKWELL	PNWS	10	0.4
SIDEOATS GRAMA	VAUGHN	PNWB	10	0.9
WESTERN WHEATGRASS	ARRIBA	PNCS	10	1.6
BLUE GRAMA	HACHITA	PNWB	10	0.3
THICKSPIKE WHEATGRASS	CRITANA	PNCS	10	1
PRAIRIE SANDREED	GOSHEN	PNWS	10	0.7
GREEN NEEDLEGRASS	LODORM	PNCB	10	1
SLENDER WHEATGRASS	PRYOR	PNCB	5	0.6
STREAMBANK WHEATGRASS	SODAR	PNCS	5	0.6
			TOTAL	9.2

DOUGLAS COUNTY TEMPORARY DRILL SEEDING MIX

SPECIES	VARIETY	NOTES	% IN MIX	POUNDS OF PLS PER ACRE
SMOOTH BROMEGRASS	LINCOLN	PICS	30	3.9
INTERMEDIATE WHEATGRASS	OAHE	PICS	30	4.5
PUBESCENT WHEATGRASS	LUNA	PICS	30	4.2
ANNUAL RYEGRASS	N/A	AICB	10	0.8
			TOTAL	13.4

DOUGLAS COUNTY LOW-GROWTH DRILL SEEDING MIX

SPECIES	VARIETY	NOTES	% IN MIX	POUNDS OF PLS PER ACRE
BUFFALOGRASS	TEXOKA	PNWS	20	3.2
BLUE GRAMA	HACHITA	PNWB	20	0.6
WESTERN WHEATGRASS	ARRIBA	PNCS	20	3.2
SIDEOATS GRAMA	VAUGHN	PNWB	20	1.8
THICKSPIKE WHEATGRASS	CRITANA	PNCS	10	1
STREAMBANK WHEATGRASS	SODAR	PNCS	10	1.2
			TOTAL	11.0

NOTES:
P=PERENNIAL
A=ANNUAL
N=NATIVE
I=INTRODUCED
W=WARM SEASON
C=COOL SEASON
S=SOD FORMER
B=BUNCHGRASS

SM SEEDING AND MULCHING 18

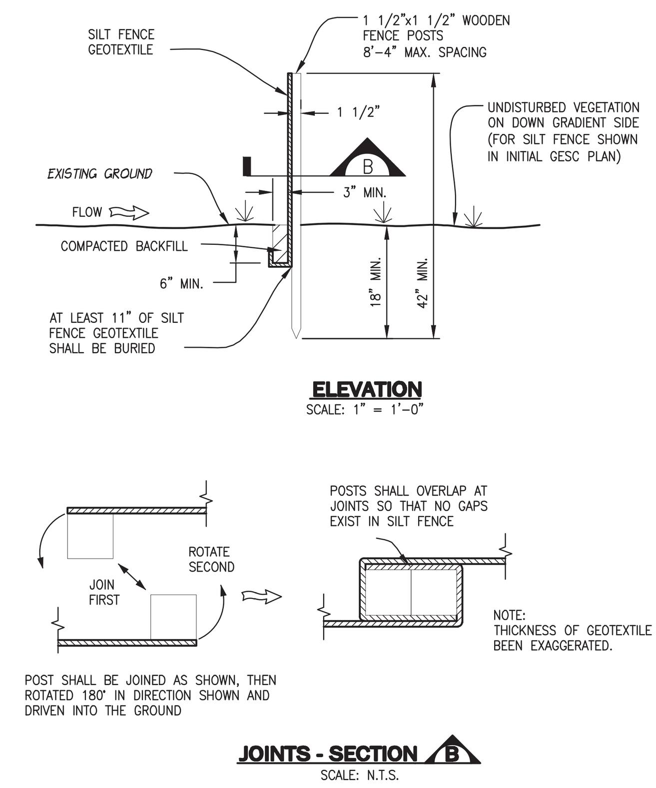

SILT FENCE INSTALLATION NOTES

1. SEE PLAN VIEW FOR:
   - LOCATION AND LENGTH OF FENCE.
2. ANCHOR TRENCH SHALL BE EXCAVATED WITH TRENCHER, OR WITH SILT FENCE INSTALLATION MACHINE; NO ROAD GRADERS, BACKHOES, ETC. SHALL BE USED. TRENCH SHALL BE COMPACTED BY HAND, WITH "JUMPING JACK", OR BY WHEEL ROLLING. COMPACTION SHALL BE SUCH THAT SILT FENCE RESISTS BEING PULLED OUT OF ANCHOR TRENCH BY HAND.
3. SILT FENCE GEOTEXTILE SHALL MEET THE FOLLOWING REQUIREMENTS:
   - 6-TO 12-GALLONS PER MINUTE PER SQUARE FOOT FLOW CAPACITY.
   - 90 LB. TENSILE STRENGTH PER ASTM D4622.
   - UV DESIGN AT 500 HRS MIN. 70% STRENGTH RETAINED PER ASTM D4355.
4. SILT FENCE INDICATED ON INITIAL GESC PLAN SHALL BE INSTALLED PRIOR TO ANY LAND-DISTURBING ACTIVITIES.

SILT FENCE MAINTENANCE NOTES

1. THE RECOMMENDED INSPECTION FREQUENCY FOR SILT FENCE IS DAILY, DURING AND AFTER ANY STORM EVENT AND MAKE REPAIRS OR CLEAN OUT UPSTREAM SEDIMENT AS NECESSARY.
2. SEDIMENT ACCUMULATED UPSTREAM OF SILT FENCE SHALL BE REMOVED WHEN THE UPSTREAM SEDIMENT REACHES A DEPTH OF 6-INCHES.
3. SILT FENCE SHALL BE REMOVED WHEN THE UPSTREAM DISTURBED AREA IS STABILIZED AND GRASS COVER IS APPROVED BY THE COUNTY. IF ANY DISTURBED AREA EXISTS AFTER REMOVAL, IT SHALL BE SEEDED AND MULCHED OR OTHERWISE STABILIZED IN A MANNER APPROVED BY THE COUNTY.

SF SILT FENCE 19

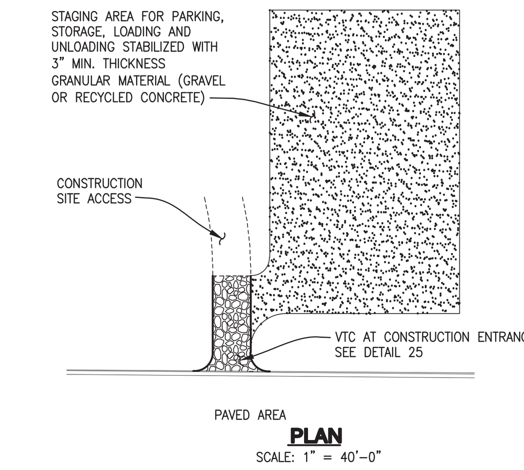

STABILIZED STAGING AREA INSTALLATION NOTES

1. SEE PLAN VIEW FOR GENERAL LOCATION OF STAGING AREA. CONTRACTOR MAY MODIFY LOCATION AND SIZE OF STABILIZED STAGING AREA WITH COUNTY APPROVAL.
2. STABILIZED STAGING AREA SHALL BE LARGE ENOUGH TO FULLY CONTAIN PARKING, STORAGE, AND UNLOADING AND LOADING OPERATIONS.
3. IF REQUIRED BY THE COUNTY, SITE ACCESS ROADS SHALL BE STABILIZED IN THE SAME MANNER AS THE STAGING AREA.
4. STAGING AREA SHALL BE STABILIZED PRIOR TO ANY OTHER OPERATIONS ON THE SITE.
5. THE STABILIZED STAGING AREA SHALL CONSIST OF A MINIMUM OF 3" OF GRANULAR MATERIAL (GRAVEL OR RECYCLED CONCRETE).

STABILIZED STAGING AREA MAINTENANCE NOTES

1. THE RECOMMENDED INSPECTION FREQUENCY FOR THE STABILIZED STAGING AREA IS WEEKLY, DURING AND AFTER ANY STORM EVENT AND MAKE REPAIRS OR CLEAN OUT UPSTREAM SEDIMENT AS NECESSARY.
2. GESC MANAGER SHALL PROVIDE ADDITIONAL THICKNESS OF GRANULAR MATERIAL IF ANY RUTTING OCCURS OR UNDERLYING SUBGRADE BECOMES EXPOSED.
3. STABILIZED STAGING AREA SHALL BE ENLARGED IF NECESSARY TO CONTAIN PARKING, STORAGE, AND UNLOADING AND LOADING OPERATIONS.
4. ANY ACCUMULATED DIRT OR MUD SHALL BE REMOVED FROM THE SURFACE OF THE STABILIZED STAGING AREA.
5. THE STABILIZED STAGING AREA SHALL BE REMOVED AT THE END OF CONSTRUCTION. THE GRANULAR MATERIAL SHALL BE REMOVED OR, IF APPROVED BY THE COUNTY, USED ON SITE, AND THE AREA TOPSOILED, DRILL SEEDED AND CRIMP MULCHED OR OTHERWISE STABILIZED.

SSA STABILIZED STAGING AREA 20

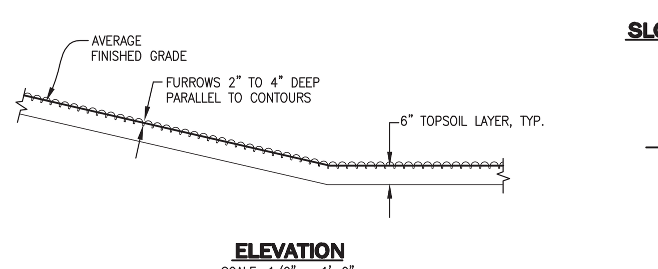

SURFACE ROUGHENING INSTALLATION NOTES

1. SURFACE ROUGHENING SHALL BE PROVIDED ON ALL FINISHED GRADES (SLOPES AND "FLAT" AREAS) WITHIN 2 DAYS OF COMPLETION OF FINISHED GRADE (FOR AREAS NOT RECEIVING TOPSOIL) OR WITHIN 2 DAYS OF TOPSOIL PLACEMENT.
2. AREAS WHERE BUILDING FOUNDATIONS, PAVEMENT, OR SOD IS TO BE PLACED WITHIN 7-DAYS OF FINISHED GRADING DO NOT NEED TO BE SURFACE ROUGHENED.
3. DISTURBED SURFACES SHALL BE ROUGHENED USING RIPPING OR TILLING EQUIPMENT ON THE CONTOUR OR TRACKING UP AND DOWN A SLOPE USING EQUIPMENT TREADS.

SURFACE ROUGHENING MAINTENANCE NOTES

1. THE RECOMMENDED INSPECTION FREQUENCY FOR SURFACE ROUGHENING IS WEEKLY, DURING AND AFTER ANY STORM EVENT, AND MAKE REPAIRS.
2. VEHICLES AND EQUIPMENT SHALL GENERALLY BE CONFINED TO ACCESS DRIVES AND SHALL NOT BE DRIVEN OVER AREAS THAT HAVE BEEN SURFACE ROUGHENED.
3. IN NON-TURF GRASS FINISHED AREAS, SEEDING AND MULCHING SHALL TAKE PLACE DIRECTLY OVER SURFACE ROUGHENED AREAS WITHOUT FIRST SMOOTHING OUT THE SURFACE.
4. IN AREAS NOT SEEDED AND MULCHED AFTER SURFACE ROUGHENING, SURFACES SHALL BE RE-ROUGHENED AS NECESSARY TO MAINTAIN GROOVE DEPTH AND SMOOTH OVER ANY RILL EROSION.

SR SURFACE ROUGHENING 21

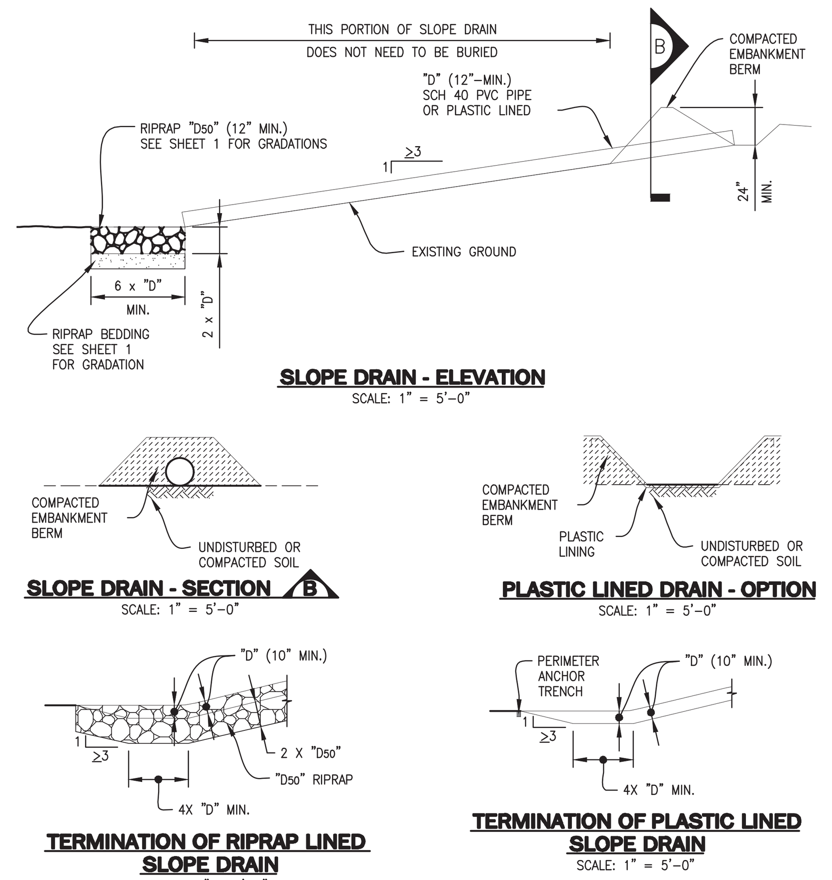

SLOPE DRAIN INSTALLATION NOTES

1. SEE PLAN VIEW FOR:
   - LOCATION AND LENGTH OF SLOPE DRAIN.
   - PIPE DIAMETER, "D", AND RIPRAP SIZE, "D50".
2. SLOPE DRAIN DIMENSIONS SHALL BE CONSIDERED MINIMUM DIMENSIONS; CONTRACTOR MAY ELECT TO INSTALL LARGER FACILITIES. ANY DAMAGE TO SLOPE OR SLOPE DRAIN DURING RUNOFF EVENTS SHALL BE THE CONTRACTOR'S RESPONSIBILITY.
3. SLOPE DRAINS INDICATED ON INITIAL GESC PLAN SHALL BE INSTALLED PRIOR TO ANY UPSTREAM LAND-DISTURBING ACTIVITIES.
4. FOR TEMPORARY SLOPE DRAINS, PIPE MAY BE INSTALLED ON TOP OF SLOPE; HOWEVER, 12" MIN. COVER AT TOP OF SLOPE SHALL BE PROVIDED.
5. A RIPRAP PAD SHALL BE PLACED AT THE OUTFALL OF THE SLOPE DRAIN.

SLOPE DRAIN MAINTENANCE NOTES

1. THE RECOMMENDED INSPECTION FREQUENCY FOR SLOPE DRAINS IS WEEKLY, DURING AND AFTER ANY STORM EVENT AND MAKE REPAIRS AS NECESSARY.
2. TEMPORARY SLOPE DRAINS ARE TO REMAIN IN PLACE UNTIL NO LONGER NEEDED, BUT SHALL BE REMOVED PRIOR TO THE END OF CONSTRUCTION. WHEN SLOPE DRAINS ARE REMOVED, THE DISTURBED AREA SHALL BE DRILL SEEDED AND CRIMP MULCHED OR OTHERWISE STABILIZED IN A MANNER APPROVED BY THE COUNTY.

TSD TEMPORARY SLOPE DRAIN 22

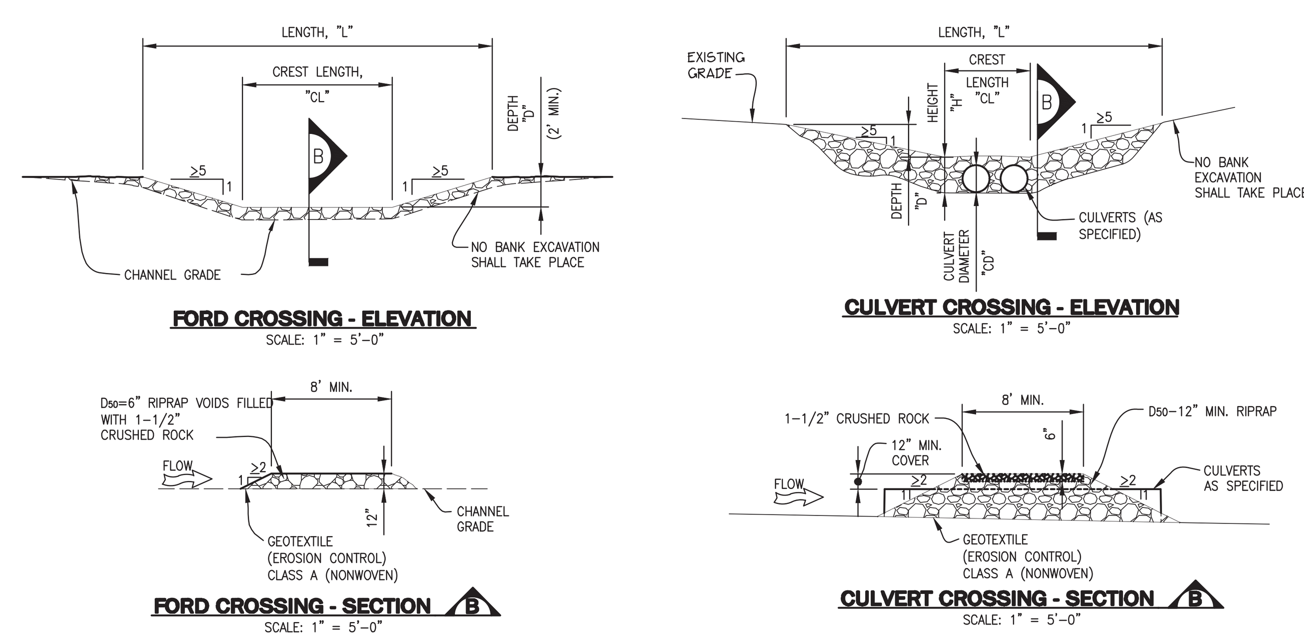

TEMPORARY STREAM CROSSING INSTALLATION NOTES

1. SEE PLAN VIEW FOR:
   - LOCATIONS OF TEMPORARY STREAM CROSSING.
   - STREAM CROSSING TYPE (FORD OR CULVERT).
   - FOR FORD CROSSING: LENGTH, "L", CREST LENGTH, "CL", AND DEPTH, "D".
   - FOR CULVERT CROSSING : LENGTH, "L", CREST LENGTH, "CL", CROSSING HEIGHT, "H", DEPTH, "D", CULVERT DIAMETER, "CD", AND NUMBER, TYPE AND CLASS OR GAUGE OF CULVERTS.
2. TEMPORARY STREAM CROSSING DIMENSIONS, D50, AND NUMBER OF CULVERTS INDICATED (FOR CULVERT CROSSING) SHALL BE CONSIDERED MINIMUM DIMENSIONS; ENGINEER MAY ELECT TO INSTALL LARGER FACILITIES. ANY DAMAGE TO STREAM CROSSING OR EXISTING STREAM CHANNEL DURING BASEFLOW OR FLOOD EVENTS SHALL BE THE CONTRACTOR'S RESPONSIBILITY.
3. SEE ROCK AND RIPRAP GRADATIONS FOR RIPRAP AND 1-1/2" CRUSHED ROCK GRADATIONS.
4. FOR A TEMPORARY STREAM CROSSING THAT WILL CARRY LOADS, THE TEMPORARY STREAM CROSSING MUST BE DESIGNED BY THE DESIGN ENGINEER.

TEMPORARY STREAM CROSSING MAINTENANCE NOTES

1. THE RECOMMENDED INSPECTION FREQUENCY FOR TEMPORARY STREAM CROSSINGS IS WEEKLY, DURING AND AFTER ANY STORM EVENT AND MAKE REPAIRS OR CLEAN OUT UPSTREAM SEDIMENT AS NECESSARY.
2. SEDIMENT ACCUMULATED UPSTREAM OF TEMPORARY STREAM CROSSINGS SHALL BE REMOVED WHEN THE SEDIMENT DEPTH UPSTREAM OF CROSSING IS WITHIN 6-INCHES OF THE CREST (FORD CROSSING) OR GREATER THAN AN AVERAGE DEPTH OF 12-INCHES (CULVERT CROSSING).
3. TEMPORARY STREAM CROSSINGS ARE TO REMAIN IN PLACE UNTIL NO LONGER NEEDED, BUT SHALL BE REMOVED PRIOR TO THE END OF CONSTRUCTION.
4. WHEN TEMPORARY STREAM CROSSINGS ARE REMOVED, THE DISTURBED AREA SHALL BE DRILL SEEDED AND CRIMP MULCHED AND COVERED WITH EROSION CONTROL BLANKET OR OTHERWISE STABILIZED IN A MANNER APPROVED BY THE COUNTY.

TSC TEMPORARY STREAM CROSSING 23

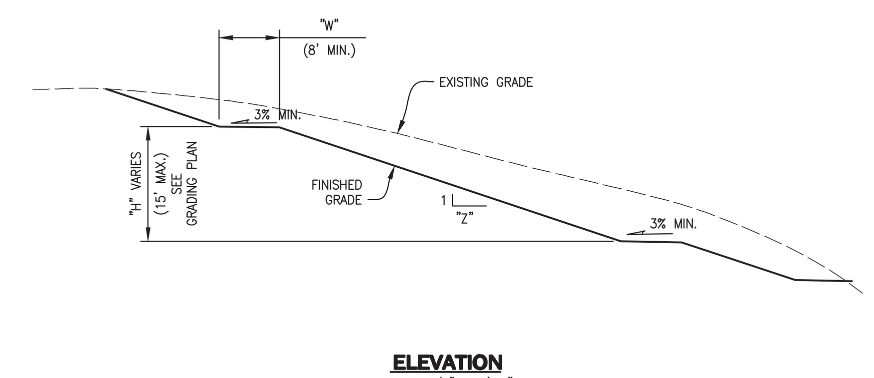

TERRACING INSTALLATION NOTES

1. SEE PLAN VIEW FOR:
   - WIDTH, "W", AND SLOPE, "Z".
2. TERRACING IS NOT REQUIRED FOR SLOPES OF 4 TO 1 OR FLATTER.
3. EARTH (VEGETATED) SLOPES STEEPER THAN 3 TO 1 ARE NOT ALLOWED ON THE SITE.

TERRACING MAINTENANCE NOTES

1. THE RECOMMENDED INSPECTION FREQUENCY FOR TERRACING IS WEEKLY, DURING AND AFTER ANY STORM EVENT AND MAKE REPAIRS OR CLEAN OUT UPSTREAM SEDIMENT AS NECESSARY.
2. ANY RILL EROSION OCCURRING ON SLOPES SHALL BE REPAIRED AND RESEEDED AND MULCHED IN ACCORDANCE WITH DETAIL 18.

TER TERRACING 24

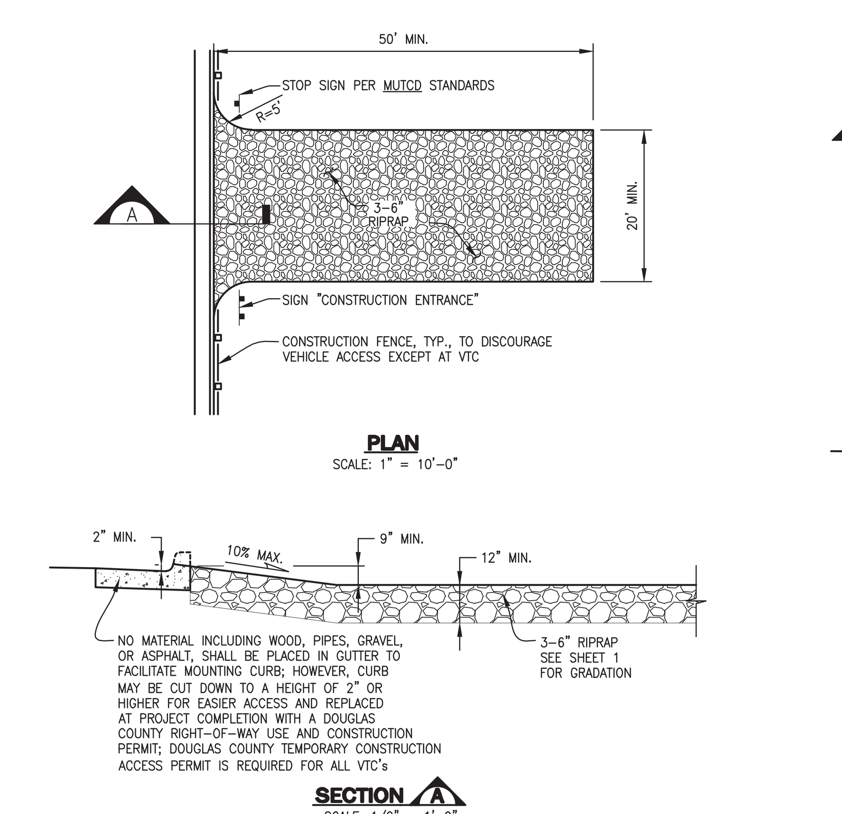

VEHICLE TRACKING CONTROL INSTALLATION NOTES

1. VEHICLE TRACKING CONTROL PADS SHALL BE INSTALLED AT EVERY ACCESS POINT TO SITE.
2. VEHICLE TRACKING CONTROL PADS SHALL CONSIST OF HARD, DENSE, DURABLE STONE, ANGULAR IN SHAPE AND RESISTANT TO WEATHERING. ROUNDED STONE OR BOULDERS WILL NOT BE ACCEPTABLE. THE STONES SHALL BE 3" WITH A MAXIMUM SIZE OF 6". THE STONE SHALL HAVE A SPECIFIC GRAVITY OF AT LEAST 2.6. CONTROL OF GRADATION WILL BE BY VISUAL INSPECTIONS.
3. ANY CRACKED OR DAMAGED CURB AND GUTTER AND SIDEWALK SHALL BE REPLACED BY PERMITTEE.
4. A DOUGLAS COUNTY TEMPORARY CONSTRUCTION ACCESS PERMIT IS REQUIRED FOR EACH POINT ONTO DOUGLAS COUNTY R.O.W.
5. A STOP SIGN INSTALLED IN ACCORDANCE WITH THE MANUAL ON UNIFORM TRAFFIC CONTROL DEVICES (MUTCD), AS AMENDED, SHALL BE INSTALLED FOR EXITING TRAFFIC AT THE VTC.

VEHICLE TRACKING CONTROL MAINTENANCE NOTES

1. THE RECOMMENDED INSPECTION FREQUENCY FOR VEHICLE TRACKING CONTROL IS DAILY. GRAVEL SURFACE SHALL BE CLEAN AND LOOSE ENOUGH TO RUT SLIGHTLY UNDER WHEEL LOADS AND CAUSE LOOSE GRAVEL TO DISLODGE MUD FROM TIRES. WHEN GRAVEL BECOMES COMPACTED OR FILLED WITH SEDIMENT SO THAT THE EFFECTIVENESS OF THE PAD IS DIMINISHED, CONTRACTOR SHALL RIP, TURN OVER, OR OTHERWISE LOOSEN GRAVEL, PLACE ADDITIONAL NEW GRAVEL, OR REPLACE WITH NEW GRAVEL AS NECESSARY TO RESTORE EFFECTIVENESS.
2. VEHICLE TRACKING CONTROL SHALL BE REMOVED AT THE END OF CONSTRUCTION, THE GRAVEL MATERIAL REMOVED OR, IF APPROVED BY THE COUNTY, USED ON SITE, AND THE AREA TOPSOILED, DRILL SEEDED AND CRIMP MULCHED OR OTHERWISE STABILIZED.

VTC VEHICLE TRACKING CONTROL 25

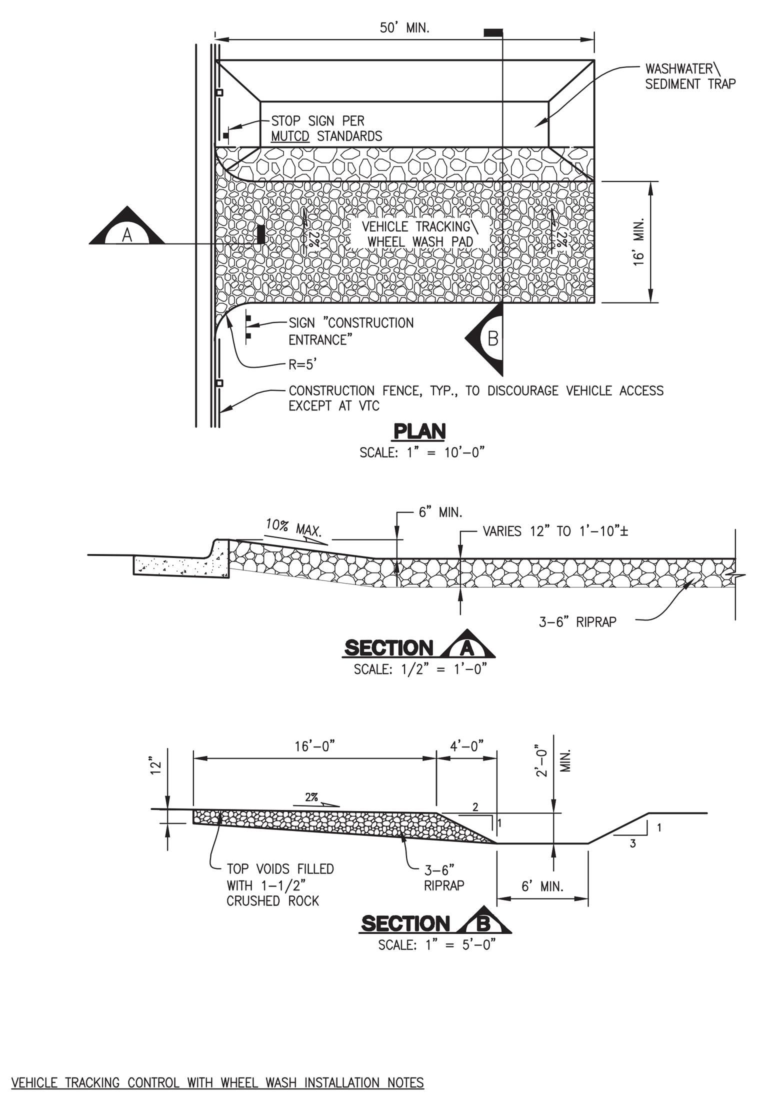

VEHICLE TRACKING CONTROL WITH WHEEL WASH INSTALLATION NOTES

1. ALTHOUGH NOT NORMALLY USED, THE COUNTY RESERVES THE RIGHT TO REQUIRE VEHICLE TRACKING CONTROL WITH WHEEL WASH FACILITIES AT SITES WHERE TRACKING ONTO PAVED AREAS BECOMES A SIGNIFICANT PROBLEM.
2. IF VEHICLE TRACKING CONTROL WITH WHEEL WASH FACILITIES ARE REQUIRED, ALL WHEELS ON EVERY VEHICLE LEAVING THE SITE SHALL BE CLEANED OF MUD USING A PRESSURE-WASHER. THE CONTRACTOR SHALL BE RESPONSIBLE FOR OBTAINING A WATER SOURCE.
3. VEHICLE TRACKING CONTROL PADS SHALL CONSIST OF HARD, DENSE, DURABLE STONE, ANGULAR IN SHAPE AND RESISTANT TO WEATHERING. ROUNDED STONE OR BOULDERS WILL NOT BE ACCEPTABLE. THE STONES SHALL BE 3" WITH A MAXIMUM SIZE OF 6". THE STONE SHALL HAVE A SPECIFIC GRAVITY OF AT LEAST 2.6. CONTROL OF GRADATION WILL BE BY VISUAL INSPECTIONS.
4. ANY CRACKED OR DAMAGED CURB AND GUTTER AND SIDEWALK SHALL BE REPLACED BY CONTRACTOR.
5. A STOP SIGN INSTALLED IN ACCORDANCE WITH THE MANUAL ON UNIFORM TRAFFIC CONTROL DEVICES (MUTCD), AS AMENDED, SHALL BE INSTALLED FOR EXITING TRAFFIC AT THE VTC.

VEHICLE TRACKING CONTROL WITH WHEEL WASH MAINTENANCE NOTES

1. THE RECOMMENDED INSPECTION FREQUENCY FOR VEHICLE TRACKING CONTROL WITH WHEEL WASH FACILITIES IS DAILY. ACCUMULATED SEDIMENTS SHALL BE REMOVED FROM PAD SURFACE.
2. ACCUMULATED SEDIMENT IN THE WASHWATER/SEDIMENT TRAP SHALL BE REMOVED WHEN THE SEDIMENT DEPTH REACHES AN AVERAGE OF 12-INCHES.
3. VEHICLE TRACKING CONTROL WITH WHEEL WASH FACILITY SHALL BE REMOVED AT THE END OF CONSTRUCTION, THE RIPRAP MATERIAL REMOVED OR, IF APPROVED BY THE COUNTY, USED ON SITE, AND THE AREA TOPSOILED, DRILL SEEDED AND CRIMP MULCHED OR OTHERWISE STABILIZED.

WW VTC WITH WHEEL WASH 26

Sheet Revisions		
1	DOUGLAS COUNTY REISSUE	1/17

NOTE: SCALES SHOWN ARE FOR 24"x36" SHEETS; ADJUST ACCORDINGLY FOR 11"x17" SHEETS.

DOUGLAS COUNTY COLORADO

GESC GRADING, EROSION, AND SEDIMENT CONTROL

GESC PLAN STANDARD NOTES AND DETAILS