HILLCAMP TRAIL

LOCATED IN RAMPART RANGE METROPOLITAN DISTRICT NO. 1
IN THE NW QUARTER AND THE SW QUARTER OF SECTION 22, TOWNSHIP 6 SOUTH, RANGE 67 WEST OF THE 6TH P.M., CITY OF LONE TREE, COUNTY OF DOUGLAS, STATE OF COLORADO

CONSTRUCTION PLANS

ABBREVIATIONS

AC	ACRE
AD	ALGEBRAIC DIFFERENCE
AH	AHEAD
ARCH	ARCHITECT
ASCE	AMERICAN SOCIETY OF CIVIL ENGINEERS
ASS'Y	ASSEMBLY
AVE	AVENUE
BB	BOX BASE
BK	BACK
BNDY	BOUNDARY
BOP	BOTTOM OF PIPE
BOV	BLOW OFF VALVE
BFV	BUTTERFLY VALVE
BLVD	BOULEVARD
BW	BOTTOM OF WALL
C&G	CURB & GUTTER
CATV	CABLE TELEVISION
CB	CATCH BASIN
CBC	CONCRETE BOX CULVERT
CDOT	COLORADO DEPARTMENT OF TRANSPORTATION
CDS	CUL-DE-SAC
CF	CUBIC FOOT
CFS	CUBIC FEET PER SECOND
CIP	COMPLETE IN PLACE
CL	CENTER LINE
CLOMR	CONDITIONAL LETTER OF MAP REVISION
CLR	CLEAR
CMP	CORRUGATED METAL PIPE
CO	CLEAN OUT
COCS	CITY OF COLORADO SPRINGS
CONC	CONCRETE
CR	CIRCLE
CSP	CORRUGATED STEEL PIPE
CSU	COLORADO SPRINGS UTILITIES
CT	COURT
CTRB	CONCRETE THRUST REDUCER BLOCK
CY	CUBIC YARD
DBPS	DRAINAGE BASIN PLANNING STUDY
DE	DRAINAGE EASEMENT
DIA	DIAMETER
DIP	DUCTILE IRON PIPE
DR	DRIVE
DRC	DESIGN REVIEW COMMITTEE
DU	DWELLING UNITS
DY	DAY
E	EAST
EA	EACH
EGL	ENERGY GRADE LINE
EL	ELEVATION
ELEC	ELECTRIC
EOA	EDGE OF ASPHALT
EPC	EL PASO COUNTY
ERCP	ELLIPTICAL RCP
ESMT	EASEMENT
EST	ESTIMATE
EX	EXISTING
FDP	FINAL DEVELOPMENT PLAN
FDR	FINAL DRAINAGE REPORT
FES	FLARED END SECTION
FF	FINISHED FLOOR ELEVATION
FG	FINISHED GRADE
FH	FIRE HYDRANT
FL	FLOWLINE
FIL	FILING
FO	FIBER OPTIC CABLE
GB	GRADE BREAK
GE	GAS EASEMENT
GIS	GEOGRAPHIC INFORMATION SYSTEM
GL	GAS LINE
GPS	GLOBAL POSITIONING SYSTEM
GV	GATE VALVE
HBP	HOT BITUMINOUS PAVEMENT
HC	HANDICAP
HDC	HIGH DEFLECTION COUPLING
HDPE	HIGH DENSITY POLYETHYLENE
HGL	HYDRAULIC GRADE LINE
HMA	HOT MIX ASPHALT
HOA	HOME OWNERS ASSOCIATION
HP	HIGH POINT
HR	HOUR
I	INLET
IE	IRRIGATION EASEMENT
INT	INTERSECTION
INV	INVERT
IRR	IRRIGATION
KB	KICK (THRUST) BLOCK
LB	POUND
LE	LANDSCAPE EASEMENT
LF	LINEAR FOOT
LN	LANE
LOMR	LETTER OF MAP REVISION
LP	LOW POINT
LS	LUMP SUM
LT	LEFT
MAX	MAXIMUM
M/D	MOISTURE DENSITY
MDDP	MASTER DEVELOPMENT DRAINAGE PLAN
MH	MANHOLE
MIN	MINIMUM
MS	MOUNTABLE SIDEWALK
N	NORTH
NRCP	NON-REINFORCED CONCRETE PIPE
ODP	OFFICIAL DEVELOPMENT PLAN
OHE	OVERHEAD ELECTRIC
OHU	OVERHEAD UTILITY
PC	POINT OF CURVATURE
PCC	POINT OF COMPOUND CURVATURE
PCR	POINT OF CURB RETURN
PDP	PRELIMINARY DEVELOPMENT PLAN
PE	PROFESSIONAL ENGINEER
PI	POINT OF INTERSECTION
PKWY	PARKWAY
PL	PROPERTY LINE
PR	PROPOSED
PRC	POINT OF REVERSE CURVATURE
PT	POINT OF TANGENCY
PV	PLUG VALVE
PVC	POLYVINYL CHLORIDE
R	RADIUS
RCBC	REINFORCED CONCRETE BOX CULVERT
RCP	REINFORCED CONCRETE PIPE
RD	ROAD
ROW	RIGHT OF WAY
RT	RIGHT
S	SOUTH
STE	STEEL
SAN	SANITARY SEWER
SF	SQUARE FOOT
ST	STREET
STA	STATION
STM	STORM SEWER
S/W	SIDEWALK
SY	SQUARE YARD
SY-IN	SQUARE YARD INCH
TB	THRUST BLOCK
TBC	TOP BACK OF CURB
TBW	TOP BACK OF WALK
TEL	TELEPHONE
TN	TON
TOA	TOP OF ASPHALT
TOB	TOP OF BOX
TOC	TOP OF CURB OR CONCRETE
TOF	TOP OF FOUNDATION
TOP	TOP OF PIPE
TW	TOP OF WALL
TYP	TYPICAL
UDFCD	URBAN DRAINAGE AND FLOOD CONTROL DISTRICT
UE	UTILITY EASEMENT
U&DE	UTILITY & DRAINAGE EASEMENT
UGE	UNDERGROUND ELECTRIC
VCP	VITRIFIED CLAY PIPE
VPC	VERTICAL POINT OF CURVATURE
VPI	VERTICAL POINT OF INTERSECTION
VPT	VERTICAL POINT OF TANGENCY
VTC	VEHICLE TRACKING CONTROL
W	WEST
WL	WATER LINE
WM	WATER MAIN
WRD	WATER RESOURCES DEPARTMENT
WS	WATER SURFACE
WSE	WATER SURFACE ELEVATION
WTR	WATER
YR	YEAR

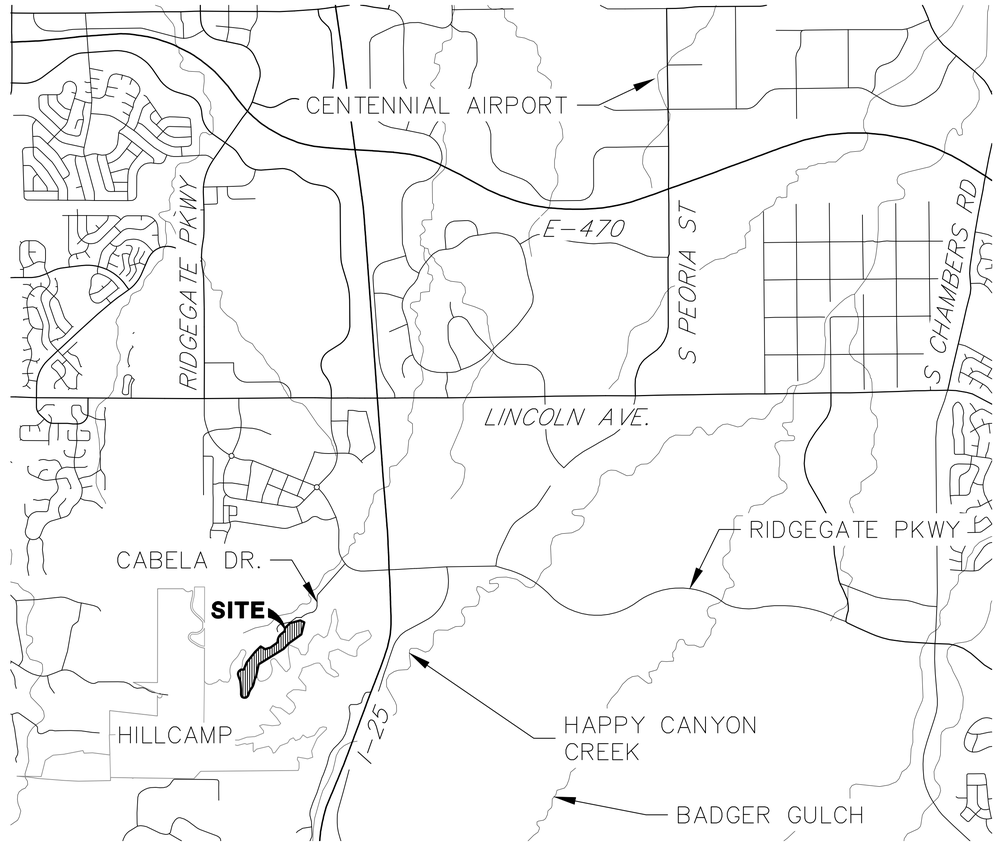

VICINITY MAP
SCALE: 1"=2000'

SHEET INDEX

1	COVER SHEET
2	GENERAL NOTES
3	LEGEND AND STREET SECTION
4–7	EXISTING CONDITIONS AND DEMOLITION PLAN
8–9	HORIZONTAL CONTROL PLAN
10–12	ROADWAY PLANS AND PROFILES AND SIGNAGE PLANS
13	OVERALL GRADING PLAN
14–17	DETAILED GRADING PLAN
18	SIDEWALK EXTENSION GRADING PLAN
19	SIDEWALK EXTENSION INTERSECTION PLAN
20–22	RETAINING WALL PLANS
23–25	TRAIL REALIGNMENT AND GRADING PLAN
26–31	STORM SEWER PLAN AND PROFILE
32–33	SUB-FILL DRAIN PLAN AND PROFILE
34–41	STORM SEWER & ROADWAY DETAILS
42	BRIDGE DETAILS
HYDRODYNAMIC SEPARATOR PLANS:	
43–46	HDS A1
47–50	HDS C1
LANDSCAPE PLANS:	
51	LAYOUT PLAN
52	SITE DETAILS
53–54	SEEDING PLAN
55–56	PLANTING PLAN
57	SEEDING PLAN
58	PLANT NOTES AND SCHEDULE
59–60	TREE PROTECTION PLAN
PEDESTRIAN BRIDGE STRUCTURAL PLANS:	
61	GENERAL INFORMATION
62	BRIDGE GENERAL LAYOUT
63	CAISSON DETAILS
64	ABUTMENT 1 PLAN & ELEVATION
65	ABUTMENT 2 PLAN & ELEVATION
66	ABUTMENT DETAILS
67	MISCELLANEOUS DETAILS
68–69	RAILING DETAILS
70	WEST WALL LAYOUT PLAN
71	WEST WALL ELEVATIONS
72–73	WEST WALL SECTIONS
74	EAST WALL LAYOUT PLAN
75	EAST WALL ELEVATIONS
76–78	EAST WALL SECTIONS
79–80	WALL DETAILS
80	TOTAL

VEGETATION REMOVAL NOTE

REMOVAL OF VEGETATION SHOULD OCCUR OUTSIDE OF THE BREEDING SEASON (MARCH TO AUGUST) TO AVOID INFRINGEMENT OF THE MIGRATORY BIRD TREATY ACT (MBTA). IF REMOVAL OF VEGETATION IS PLANNED DURING THE BREEDING SEASON, A SUPPLEMENTAL MIGRATORY BIRD SURVEY SHALL BE PERFORMED PRIOR TO VEGETATION REMOVAL.

GEOTECHNICAL NOTES TO CONTRACTOR

1. RECOMMENDATIONS OF THE "UPDATED PRELIMINARY GEOTECHNICAL INVESTIGATION AND SLOPE STABILITY EVALUATION," DATED MARCH 27, 2026, REVISED _____ XX, 2026, AND THE "GEOTECHNICAL INVESTIGATION – RIDGEGATE MESA TOPS PEDESTRAIN BRIDGE," DATED NOVEMBER 20, 2025, REVISED _____ XX, 2026, BOTH BY CTL THOMPSON, SHALL BE FOLLOWED DURING CONSTRUCTION.
2. VERTICAL BENCHING HEIGHTS OF 4 FEET ARE RECOMMENDED. DEPENDING ON IN-SITU CONDITIONS ENCOUNTERED DURING EXCAVATIONS, THIS HEIGHT MAY NOT BE POSSIBLE AND THE ACTUAL BENCHES MAY NEED TO BE MODIFIED AS DIRECTED BY THE GEOTECHNICAL ENGINEER IN THE FIELD. THE CONTRACTOR SHALL INFORM THE GEOTECHNICAL ENGINEER OF ANY CONDITIONS ENCOUNTERED THAT MAY BE DIFFERENT THAN ENCOUNTERED DURING BORING INVESTIGATIONS.
3. BENCH CUTS TO ALLOW FILL PLACEMENT SHALL NOT REMAIN OPEN FOR MORE THAN TWO (2) DAYS. THE CONTRACTOR MUST NOTIFY THE GEOTECHNICAL ENGINEER OF ANY BENCH CUTS THAT ARE OPEN MORE THAN TWO (2) DAYS, WHETHER PLANNED OR UNPLANNED.
4. CONSTRUCTION SEQUENCES SHALL BE CONSIDERED TO SATISFY THE INTERIM CUT SLOPES AS IDENTIFIED IN THE GEOTECHNICAL REPORT. IF FLATTER SLOPE LAYBACKS ARE REQUIRED TO INSTALL THE RETAINING WALLS, THE GEOTECHNICAL ENGINEER MAY RECOMMEND A DIFFERENT EARTH RETENTION SYSTEM. THE CONTRACTOR SHALL CONSULT THE GEOTECHNICAL ENGINEER IF INTERIM SLOPE LAYBACKS ARE STEEPER THAN 1.6H:1V.
5. AT THE TIME OF RETAINING WALL FINAL DESIGN AND PRIOR TO CONSTRUCTION, THE WALL DESIGNER MUST BE PROVIDED THE PARAMETERS USED IN THE GEOTECHNICAL ANALYSIS TO PERFORM LOCAL SLOPE STABILITY EVALUATION FOR THE RETAINING WALLS.

IRRIGATION NOTE

1. NO TEMPORARY OR PERMANENT IRRIGATION IS PROPOSED. IRRIGATION SHALL BE LIMITED TO HAND WATERING, OR SOME OTHER TYPE OF WATERING OUTSIDE OF AN IRRIGATION SYSTEM. WATERING OF VEGETATION SHALL BE LIMITED TO WHAT IS REQUIRED FOR THE ESTABLISHMENT OF THE PROPOSED VEGETATION.

APPLICANT/OWNER

RAMPART RANGE METROPOLITAN DISTRICT NO. 1
2001 16TH STREET, SUITE 1700
DENVER, CO 80202
P~303.779.5710

CIVIL ENGINEER/SURVEYOR

JR ENGINEERING
7200 SOUTH ALTON WAY, SUITE C400
CENTENNIAL, CO 80112
P~303.267.6220

PLANNER

DTJ DESIGN
3101 IRIS AVE, SUITE 130
BOULDER, CO 80301
P~303.443.7533

TRAFFIC ENGINEER

JR ENGINEERING
7200 SOUTH ALTON WAY, SUITE C400
CENTENNIAL, CO 80112
P~303.267.6183

GEOTECHNICAL ENGINEER

CTL THOMPSON, INC
1971 WEST 12TH AVENUE
DENVER, CO 80204
P~303.825.0777

SOIL PREPARATION NOTE:

SOIL PREPARATION SHALL BE PER RECOMMENDATIONS FROM THE GEOTECHNICAL REPORT PREPARED FOR THIS SITE:

GEOTECHNICAL ENGINEER: CTL|THOMPSON, INC
PROJECT NUMBER: DN52,378.000-115-R1

THE CONTRACTOR IS TO REVIEW THIS REPORT IN FULL PRIOR TO BID. INFORMATION IN THE GEOTECHNICAL REPORT SUPERCEDES ANY CONFLICTING INFORMATION CONTAINED IN THE CONSTRUCTION PLANS AND SPECIFICATIONS.

BENCHMARK

NGS CONTROL POINT UNBEWUST BEING A 3.5 INCH DIAMETER BRASS CAP. LOCATED ABOUT 3.2 MILES SOUTH OF INTERSTATE 25 AND COLORADO STATE HIGHWAY 470 INTERCHANGE, GO SOUTH ON INTERSTATE 25 FOR 2.9 MILES TO EXIT 191. PROCEED ON A PAVED ROAD TO THE SOUTHWEST FOR 0.2 MILES TO THE STATION ON THE LEFT. IN THE NORTHWEST CORNER OF A 24 FOOT BY 16 FOOT ROCK OUTCROP. IT IS 22.5 FEET EAST OF THE CENTERLINE OF THE PAVED ROAD, 123 FEET NORTH OF THE OUTLET OF A 3 FOOT CORRUGATED STEEL PIPE CULVERT AND APPROXIMATELY 350 FEET WEST OF THE WEST EDGE OF OIL OF SOUTHBOUND INTERSTATE 25, ELEVATION: 6125.32 (DOUGLAS COUNTRY CONTROL NETWORK) (NAVD88).

BASIS OF BEARING

THE SOUTH LINE OF THE NORTHWEST 1/4 OF SECTION 22, TOWNSHIP 6 SOUTH, RANGE 67 WEST OF THE 6TH PRINCIPAL MERIDIAN, BEING MONUMENTED BY A 3-1/4" ALUMINUM CAP STAMPED "LS 38367" AT BOTH ENDS, SAID LINE BEARING N89°59'31"E AS REFERENCED TO COLORADO STATE PLANE CENTRAL ZONE NAD(83).

CITY OF LONE TREE

DATE

THESE CONSTRUCTION PLANS HAVE BEEN REVIEWED BY THE CITY OF LONE TREE FOR STREET AND DRAINAGE, SIGNAGE AND STRIPING IMPROVEMENTS ONLY.

ENGINEERING DIVISION ACCEPTANCE BLOCK

811 Know what's below. Call before you dig.

ENGINEER'S STATEMENT

PREPARED UNDER MY SUPERVISION

KEVIN ROHRBOUGH, PE — DATE
COLORADO P.E. 48992
FOR AND ON BEHALF OF JR ENGINEERING, LLC

COLORADO REGISTERED PROFESSIONAL ENGINEER KEVIN J. ROHRBOUGH 48992 9/4/26

UNTIL SUCH TIME AS THESE DRAWINGS ARE APPROVED BY THE APPROPRIATE REVIEWING AGENCIES, JR ENGINEERING APPROVES THEIR USE ONLY FOR THE PURPOSES DESIGNATED BY WRITTEN AUTHORIZATION.

PREPARED FOR
RAMPART RANGE METRO DISTRICT
2001 16TH STREET
SUITE 1700
DENVER, CO 80202
PHONE: 303-779-5710

J·R ENGINEERING
A Westrian Company
Centennial 303-740-9393 • Colorado Springs 719-593-2593
Fort Collins 970-491-9888 • www.jrengineering.com

No.	REVISION	BY	DATE
0	FOR APPROVAL	KJR	9/2/26

H-SCALE	1"=2000'
V-SCALE	N/A
DATE	9/4/26
DESIGNED BY	N/A
DRAWN BY	KAC
CHECKED BY	

HILLCAMP TRAIL

COVER SHEET

SHEET 1 OF 80

JOB NO. 15950.18

C:\Users\Crumpk.JRENGINEERING\DC\ACCDocs\JR Engineering\15950123\Project Files\15950118 Cabela Drive\Drawings\Sheet Drawings\15950118 Cabela Drive Col_T1\15950118 CV01.dwg, Cover, 9/8/2026 2:46:01 PM, crumpk

GENERAL PROJECT NOTES:

1. ALL MATERIALS, WORKMANSHIP, AND CONSTRUCTION OF IMPROVEMENTS SHALL MEET OR EXCEED THE GOVERNING CITY, COUNTY, AND/OR STATE AND APPLICABLE UTILITY DISTRICT STANDARDS AND SPECIFICATIONS, AND APPLICABLE STATE AND FEDERAL REGULATIONS. WHERE THERE IS A CONFLICT BETWEEN THESE PLANS AND ANY APPLICABLE STANDARDS, THE HIGHER QUALITY STANDARD SHALL APPLY. ALL WORK SHALL BE INSPECTED AND APPROVED BY THE CITY AND APPLICABLE UTILITY DISTRICT(S).

2. THE SITE CONSTRUCTION PLANS LISTED WITHIN THIS PLAN SET ARE NOT FOR CONSTRUCTION UNLESS APPROVED BY THE APPROPRIATE GOVERNING JURISDICTION. THE CONTRACTOR SHALL CONFIRM SAID APPROVAL PRIOR TO CONSTRUCTION. THE CONTRACTOR SHALL KEEP ONE (1) SIGNED COPY OF THE APPROVED SET OF PLANS, APPROPRIATE SPECIFICATIONS AND STANDARDS, AND APPROVED PERMITS ONSITE AT ALL TIMES.

3. NO REVISIONS SHALL BE MADE TO THESE PLANS WITHOUT THE APPROVAL OF THE CITY, COUNTY, STATE OR LOCAL DISTRICT AND THE ENGINEER OF RECORD.

4. ALL REFERENCES TO ANY PUBLISHED STANDARDS SHALL REFER TO THE LATEST REVISION OF SAID STANDARDS, UNLESS SPECIFICALLY STATED OTHERWISE.

5. THE CONTRACTOR IS RESPONSIBLE FOR ALL LABOR AND MATERIALS NECESSARY FOR THE COMPLETION OF THE INTENDED IMPROVEMENTS SHOWN ON THESE DRAWINGS OR DESIGNATED TO BE PROVIDED, INSTALLED, CONSTRUCTED, REMOVED, OR RELOCATED UNLESS SPECIFICALLY NOTED OTHERWISE.

6. THE CONTRACTOR, AT HIS OWN EXPENSE, SHALL BE RESPONSIBLE FOR OBTAINING ALL NECESSARY PERMITS AND LICENSES FOR WORK INCLUDING, BUT NOT LIMITED TO DEMOLITION, STREET CUTS, UTILITY INTERFERENCES, TRAFFIC CONTROL, GRADING, AND UTILITY FROM ALL APPLICABLE AGENCIES; AND FOR COMPLYING WITH ALL PROVISIONS INCLUDED THEREIN. THE CONTRACTOR SHALL BE RESPONSIBLE FOR SECURING ALL OTHER APPLICABLE PERMITS NOT SPECIFICALLY REQUIRED BY THE AUTHORITY HAVING JURISDICTION.

7. THE CONTRACTOR SHALL UTILITY STAKE PROJECT AT LEAST 2 WORKING DAYS PRIOR TO BEGINNING EXCAVATION OR GRADING, TO HAVE ALL REGISTERED UTILITY LOCATIONS MARKED. OTHER UNREGISTERED UTILITY ENTITIES (I.E. DITCH COMPANY) ARE TO BE LOCATED BY CONTACTING THE RESPECTIVE REPRESENTATIVE.

8. THE CONTRACTOR IS RESPONSIBLE FOR FIELD LOCATING AND VERIFYING ELEVATIONS OF ALL EXISTING SEWER MAINS, WATER MAINS, CURBS, GUTTERS, AND OTHER UTILITIES AT THE POINTS OF CONNECTION SHOWN ON THE PLANS, AND AT ANY UTILITY CROSSINGS PRIOR TO INSTALLING ANY OF THE NEW IMPROVEMENTS. IF A CONFLICT EXISTS AND/OR A DESIGN MODIFICATION IS REQUIRED, THE CONTRACTOR SHALL COORDINATE WITH THE ENGINEER TO MODIFY THE DESIGN. DESIGN MODIFICATION(S) MUST BE APPROVED BY THE APPROPRIATE AUTHORITY PRIOR TO BEGINNING CONSTRUCTION.

9. ANY DISRUPTION OF UTILITY SERVICE THAT IS REQUIRED TO ADJUST, EXTEND, RELOCATE OR OTHERWISE REARRANGE ANY UTILITY WITHIN THE PROJECT AREA SHALL BE COORDINATED IN ADVANCE WITH THE AFFECTED UTILITY ENTITY.

10. RIM ELEVATIONS SHOWN ARE APPROXIMATE ONLY AND ARE NOT TO BE TAKEN AS FINAL ELEVATIONS. THE CONTRACTOR SHALL USE PRECAST CONCRETE ADJUSTMENT RINGS, GROUT, AND STEEL SHIMS TO ADJUST THE MANHOLE FRAMES TO FINAL GRADE IN CONFORMANCE WITH THE CITY OR UTILITY COMPANY/DISTRICT STANDARD SPECIFICATIONS. ALL FRAMES SHALL BE ADJUSTED TO FINAL GRADE PRIOR TO THE FINAL LIFT OF ASPHALT.

11. THE CONTRACTOR SHALL BE RESPONSIBLE FOR ALL ASPECTS OF PROJECT SAFETY INCLUDING, BUT NOT LIMITED TO, EXCAVATION, TRENCHING, SHORING, TRAFFIC CONTROL, AND SECURITY.

12. THE CONTRACTOR SHALL SUBMIT A TRAFFIC CONTROL PLAN, IN ACCORDANCE WITH THE M.U.T.C.D. TO THE APPROPRIATE RIGHT-OF-WAY AUTHORITY (CITY, COUNTY, OR STATE) FOR APPROVAL, PRIOR TO ANY CONSTRUCTION ACTIVITIES WITHIN, OR AFFECTING, THE RIGHT-OF-WAY. THE CONTRACTOR SHALL BE RESPONSIBLE FOR PROVIDING ANY AND ALL TRAFFIC CONTROL DEVICES AS MAY BE REQUIRED BY THE CONSTRUCTION ACTIVITIES. ALL WORK WITHIN THE RIGHT OF WAY SHALL BE DONE IN ACCORDANCE WITH THE GOVERNING AUTHORITY'S STANDARDS AND SPECIFICATIONS.

13. THE CONTRACTOR SHALL BE RESPONSIBLE FOR THE CLEANING AND RESTORATION OF ANY EXISTING IMPROVEMENTS INCLUDING, BUT NOT LIMITED TO STREET PAVEMENT, FENCES, SOD, LANDSCAPING, SPRINKLER SYSTEMS, AND UTILITIES DISTURBED DURING CONSTRUCTION TO THEIR ORIGINAL LOCATION AND CONDITION.

14. INCLUDED IN THESE PLANS IS THE DEMOLITION AND DISPOSAL OF ALL EXISTING UTILITIES, SITE IMPROVEMENTS, STRUCTURES, AND SITE FURNISHINGS NEEDED FOR CONSTRUCTION OF THE IMPROVEMENTS SHOWN HEREON. ALL QUESTIONS IN REGARD TO DEMOLITION SHALL BE SUBMITTED TO THE OWNER IN WRITING PRIOR TO BID.

15. ALL DEMOLITION, REMOVAL, DISPOSAL, AND ABANDONMENT OF UTILITIES, STRUCTURES, SITE IMPROVEMENTS, AND SITE FURNISHINGS SHALL BE DONE IN ACCORDANCE WITH ALL APPLICABLE FEDERAL, STATE AND LOCAL STANDARDS AND SPECIFICATIONS, AND PERMIT REQUIREMENTS.

16. ALL DISTURBED SOIL, ON- OR OFF-SITE AND RELATED TO WORK AT THIS PROJECT SITE, IS REQUIRED TO BE PROTECTED FROM WIND AND STORM WATER EROSION. TO MITIGATE EROSION, THE CONTRACTOR SHALL USE STANDARD EROSION CONTROL TECHNIQUES DESCRIBED IN THE GESC PLAN SET AND GESC REPORT FOR THIS PROJECT.

17. ALL STRUCTURAL EROSION CONTROL MEASURES SHALL BE INSTALLED PRIOR TO ANY GROUND-DISTURBING ACTIVITY. ALL EROSION CONTROL MEASURES SHALL BE MAINTAINED IN GOOD REPAIR BY THE CONTRACTOR UNTIL SUCH TIME AS THE ENTIRE DISTURBED AREA IS STABILIZED WITH HARD SURFACE OR PERMANENT LANDSCAPING. THE CONTRACTOR IS RESPONSIBLE FOR REFERRING TO ANY EROSION AND SEDIMENT CONTROL, STORMWATER MANAGEMENT, STORMWATER POLLUTION PREVENTION, OR SIMILAR PLAN AND/OR NARRATIVE AND ASSOCIATED PERMITS INCLUDING, BUT NOT LIMITED TO GRADING PERMITS, AND COMPLYING WITH THE REQUIREMENTS THEREIN.

18. THE CONTRACTOR SHALL BE RESPONSIBLE FOR COORDINATING ALL WORK, INSPECTIONS, AND CERTIFICATIONS AS REQUIRED BY THE CITY, STATE OR LOCAL DISTRICTS. ALL NECESSARY INSPECTIONS AND/OR CERTIFICATIONS REQUIRED SHALL BE PERFORMED PRIOR TO ANNOUNCED BUILDING POSSESSION AND THE FINAL CONNECTION OF SERVICES. THE CONTRACTOR SHALL BE RESPONSIBLE FOR ALL COST ASSOCIATED WITH THE INSPECTION AND CERTIFICATION UNLESS OTHERWISE ARRANGED WITH THE OWNER/DEVELOPER. THE CONTRACTOR SHALL COORDINATE ALL CERTIFICATIONS, AND PROVIDE FIELD SURVEYED AS-BUILT INFORMATION FOR REVIEW BY THE OWNER/DEVELOPER AND/OR ENGINEER AS EARLY AS POSSIBLE IN THE CONSTRUCTION SCHEDULE TO AVOID POTENTIAL DELAYS.

19. CONTRACTOR IS RESPONSIBLE FOR AS-BUILT DRAWINGS, TESTS, REPORTS, AND/OR ANY OTHER CERTIFICATES OR INFORMATION AS REQUIRED FOR ACCEPTANCE OF WORK FROM CITY, UTILITY DISTRICTS, OR ANY OTHER GOVERNING AGENCY, OR TO THE OWNER/DEVELOPER AS REQUIRED BY AND IN ACCORDANCE WITH THE GOVERNING AUTHORITY OR OWNER/DEVELOPER'S CRITERIA. CONTRACTOR SHALL BE RESPONSIBLE FOR RECORDING AS-BUILT INFORMATION AN A SET OF RECORD DRAWINGS KEPT AT THE CONSTRUCTION SITE AND AVAILABLE TO THE GOVERNING CITY, COUNTY, AND/OR STATE AND UTILITY DISTRICT INSPECTOR AT ALL TIMES. THE CONTRACTOR SHALL CONFIRM ANY REQUIREMENTS AS EARLY AS POSSIBLE IN THE CONSTRUCTION SCHEDULE TO ACCOUNT FOR PREPARATION AND REVIEW OF THE INFORMATION TO AVOID POTENTIAL DELAYS.

20. IF, DURING THE CONSTRUCTION PROCESS, CONDITIONS ARE ENCOUNTERED BY THE CONTRACTOR, HIS SUBCONTRACTORS, OR OTHER AFFECTED PARTIES, WHICH COULD INDICATE A SITUATION THAT IS NOT IDENTIFIED IN THE PLANS OR SPECIFICATIONS, THE CONTRACTOR SHALL CONTACT THE OWNER/DEVELOPER AND THE ENGINEER IMMEDIATELY.

21. DIMENSIONS FOR LAYOUT AND CONSTRUCTION ARE NOT TO BE SCALED FROM ANY DRAWING. IF PERTINENT DIMENSIONS ARE NOT SHOWN, CONTACT THE CONSULTING ENGINEER FOR CLARIFICATION AND ANNOTATE THE DIMENSION ON THE AS-BUILT RECORD DRAWING.

22. BENCHMARK VERIFICATION: THE CONTRACTOR SHALL VERIFY THE EXISTING CONDITIONS AND THE PROPOSED ELEVATIONS IN THIS CONSTRUCTION PLAN SET AGAINST THE PROJECT BENCHMARK, IDENTIFIED HEREIN, PRIOR TO COMMENCING WORK.

23. DOUGLAS COUNTY STANDARD DETAILS SHALL NOT BE MODIFIED. ANY NON-STANDARD DETAILS WILL BE CLEARLY IDENTIFIED AS SUCH.

24. ALL ELEVATIONS ARE ON UNITED STATES COAST AND GEODETIC SURVEY (USC&GS) (NAVD-88) DATUM WITH DATE. THE RANGE POINT OR MONUMENTS SHALL BE SHOWN ON CONSTRUCTION DRAWINGS.

25. THE PROFESSIONAL ENGINEER, REGISTERED IN THE STATE OF COLORADO, SIGNING THESE PLANS IS RESPONSIBLE FOR ENSURING THAT THE DETAILS INCLUDED ARE COMPATIBLE WITH THE STANDARD DOUGLAS COUNTY DETAILS CONTAINED IN THE LATEST VERSIONS OF THE CRITERIA MANUALS. THIS INCLUDES, BUT IS NOT LIMITED TO:

- DOUGLAS COUNTY ROADWAY DESIGN AND CONSTRUCTION STANDARDS
- DOUGLAS COUNTY STORM DRAINAGE DESIGN AND TECHNICAL CRITERIA
- DOUGLAS COUNTY GRADING, EROSION AND SEDIMENT CONTROL CRITERIA
- CDOT M&S STANDARDS
- MUTCD
- URBAN STORM DRAINAGE CRITERIA MANUAL VOLUMES 1, 2, & 3

STORM SEWER NOTES:

1. SEE COVER SHEET FOR BENCHMARK.
2. ALL STATIONING IS PIPE CENTERLINE UNLESS OTHERWISE NOTED.
3. INLET STATIONING IS TO CENTER OF INLET.
4. PIPE LENGTHS ARE FROM INSIDE INLET WALL TO INSIDE INLET WALL, FROM CENTER OF MANHOLE TO INSIDE INLET WALL, OR FROM CENTER OF MANHOLE TO CENTER OF MANHOLE. PIPE LENGTHS INCLUDE FES.
5. ALL ON-GRADE INLETS ARE TO MATCH TBC ELEVATIONS AT EACH END, FOLLOWING STREET GRADES.
6. PIPE BEDDING SHALL CONFORM TO THE DOUGLAS COUNTY ROADWAY DESIGN AND CONSTRUCTION STANDARDS.
7. ALL INLETS ARE TYPE R INLETS UNLESS OTHERWISE NOTED.
8. ALL TYPE R INLET RIM ELEVATIONS REFERENCE TBC ELEVATION AT CENTER OF INLET UNLESS OTHERWISE NOTED.
9. COORDINATES FOR RCP END SECTIONS ARE SHOWN AT THE DOWNSTREAM END ALONG CENTERLINE OF PIPE
10. UNLESS OTHERWISE SHOWN, RCP SHALL BE BACKFILLED ACCORDING TO THE STANDARD TRENCH SECTION SHOWN ON THE STORM SEWER DETAILS.
11. LENGTHS SHOWN FOR RCP REPRESENT HORIZONTAL LENGTHS AND NOT FOR LENGTHS ALONG THE PIPE SLOPE.
12. ALL RCP STORM SEWER MUST USE ASTM C44S WATERTIGHT GASKETS PER THE CURRENT DOUGLAS COUNTY AND URBAN DRAINAGE DESIGN CRITERIA.
13. ALL RCP SHALL BE CLASS III STORM SEWER PIPE UNLESS OTHERWISE SPECIFIED.
14. JOINT RESTRAINTS ARE REQUIRED FOR A MINIMUM OF THE LAST TWO PIPE JOINTS AND FLARED END SECITONS OF AN RCP OUTFALL.
15. PRECAST INLETS AND MANHOLE BASES ARE NOT ALLOWED.
16. TOE WALLS ARE REQUIRED ON FLARED END SECTIONS AT THE OUTLET END OF CULVERTS AND STORM SEWER OUTFALLS. FILTER FABRIC IS REQUIRED UNDER ALL RIPRAP PADS.
17. TWO MANHOLE ACCESS POINTS ARE REQUIRED ON ALL TYPE R CURB INLETS GREATER THAN OR EQUAL TO TEN FEET IN LENGTH.

CITY OF LONE TREE SIGNAGE & STRIPING NOTES

1. ALL TRAFFIC CONTROL DEVICES SHALL CONFORM TO THE MOST RECENT VERSION OF THE FEDERAL MANUAL ON UNIFORM TRAFFIC CONTROL DEVICES (MUTCD), THE "COLORADO SUPPLEMENTAL MUTCD" AND THE DOUGLAS COUNTY "ROAD AND CONSTRUCTION STANDARDS MANUAL". FURTHER SPECIFICATIONS AND ILLUSTRATIONS ARE LOCATED IN THE COLORADO DIVISION OF HIGHWAYS "M AND S STANDARDS".
2. DELINEATION OF ROADWAYS SHALL BE AS SPECIFIED IN THE COLORADO "M AND S MANUAL".
3. SPECIAL CARE SHALL BE TAKEN IN SIGN LOCATION TO ENSURE AN UNOBSTRUCTED VIEW OF EACH SIGN. STREET NAME SIGNS SHALL BE MOUNTED SO THAT THEY CAN BE SEEN FROM ALL DIRECTIONS OF TRAVEL.
4. INSTALLATION OF SIGNS SHALL CONFORM TO THE MUTCD MOUNTING HEIGHT REQUIREMENTS, INCLUDING A 7-FOOT MINIMUM HEIGHT FROM THE BOTTOM OF THE LOWEST SIGN PANEL TO THE TOP GRADE OF SIDEWALK.
5. ALL NEWLY INSTALLED TRAFFIC SIGNS SHALL MEET THE MINIMUM RETRO-REFLECTIVITY AND ILLUMINATION STANDARDS AS SET FORTH BY THE MUTCD (LATEST EDITION). THESE MINIMUM REQUIREMENTS SHALL FALL UNDER THE REQUIREMENTS OF THE TWO (2) YEAR WARRANTY PERIOD FOR NEW CONSTRUCTION.
6. DIAMOND GRADE MATERIAL SHALL BE USED ON ALL STOP SIGNS.
7. THE CONTRACTOR INSTALLING SIGNS IS RESPONSIBLE FOR LOCATING AND PROTECTING ALL UNDERGROUND UTILITIES. LONE TREE PUBLIC WORKS SHALL BE CONTACTED A MINIMUM OF 72 HOURS PRIOR TO INSTALLATION AT 303-662-8112.
8. FOLLOWING INSTALLATION, THE CONTRACTOR SHALL NOTIFY THE CITY OF LONE TREE PUBLIC WORKS DEPARTMENT, 303-662-8112, A FIELD INSPECTION OF LOCATION AND INSTALLATION OF ALL SIGNS SHALL BE PERFORMED BY PUBLIC WORKS. ALL DISCREPANCIES IDENTIFIED DURING THE FIELD INSPECTION MUST BE CORRECTED BEFORE THE TWO-YEAR WARRANTY PERIOD WILL BEGIN.
9. SIGNAGE AND STRIPING HAS BEEN DETERMINED BY INFORMATION AVAILABLE AT THE TIME OF REVIEW. PRIOR TO INITIATION OF THE WARRANTY PERIOD, LONE TREE RESERVES THE RIGHT TO REQUIRE MODIFICATIONS TO EXISTING OR INSTALLATION OF ADDITIONAL SIGNAGE AND/OR STRIPING IF THEY DETERMINE THAT AN UNFORESEEN CONDITION WARRANTS SUCH MODIFICATION ACCORDING TO THE MUTCD OR THE CDOT M AND S STANDARDS. ALL SIGNAGE AND STRIPING SHALL FALL UNDER THE REQUIREMENTS OF THE TWO (2) YEAR WARRANTY PERIOD FOR NEW CONSTRUCTION.
10. FINAL STRIPING AND CROSSWALK LAYOUT TO BE APPROVED BY THE CITY OF LONE TREE PRIOR TO INSTALLATION. LONE TREE PUBLIC WORKS SHALL BE CONTACTED A MINIMUM OF 72 HOURS PRIOR TO INSTALLATION AT 303-662-8112.
11. CROSSWALKS SHALL:
    BE CONSTRUCTED USING 125 MIL PREFORMED THERMOPLASTIC.
    LINE UP WITH THE HANDICAP RAMPS AT BOTH ENDS.
    BE CENTERED ON LANE LINES SO AS TO BE STRADDLED BY VEHICLES.
12. ALL PAVEMENT MARKINGS SHALL BE AS FOLLOWS:
    FOR CONCRETE SURFACE: METHYL METHACRYLATE OR EPOXY PAINT.
    FOR ASPHALT SURFACE: PAINT, 90 MIL PREFORMED THERMOPLASTIC, INLAID MARKING TAPE, METHYL METHACRYLATE, OR EPOXY PAINT.
    TURN ARROWS AND ONLYS: 125 MIL PREFORMED THERMOPLASTIC.
13. ALL PAVEMENT MARKING SHALL BE PRECEDED BY THE APPROPRIATE SURFACE PREPARATION.
14. ANY SIGNAGE AND/OR OTHER TRAFFIC CONTROL DEVICES REMOVED SHALL BE RETURNED TO THE CITY OF LONE TREE.
15. TYPE III LIGHTED BARRICADES SHALL BE SET AT ENDS OF ROADWAYS, SEPARATING FINISHED AND UNFINISHED CONSTRUCTION AREAS AND WILL BE MAINTAINED BY THE CONTRACTOR/DEVELOPER.

NOTE: ALSO SEE CITY OF LONE TREE "STREET SIGN DETAILS" FOR ADDITIONAL INTERSECTION STREET SIGNAGE REQUIREMENTS.

CITY OF LONE TREE GENERAL NOTES

1. THE CITY OF LONE TREE ENGINEER'S SIGNATURE AFFIXED TO THIS DOCUMENT INDICATES THE ENGINEERING DIVISION HAS REVIEWED THE DOCUMENT AND FOUND IT IN GENERAL CONFORMANCE WITH THE CITY OF LONE TREE SUBDIVISION RESOLUTION OR APPROVED VARIANCES TO THOSE REGULATIONS. THE CITY OF LONE TREE ENGINEER, THROUGH ACCEPTANCE OF THIS DOCUMENT, ASSUMES NO RESPONSIBILITY, OTHER THAN STATED ABOVE, FOR THE COMPLETENESS AND/OR ACCURACY OF THESE DOCUMENTS. THE OWNER AND ENGINEER UNDERSTAND THAT THE RESPONSIBILITY FOR THE ENGINEERING ADEQUACY OF THE FACILITIES DEPICTED IN THIS DOCUMENT LIES SOLELY WITH THE REGISTERED PROFESSIONAL ENGINEER WHOSE STAMP AND SIGNATURE IS AFFIXED TO THIS DOCUMENT.
2. ALL ROADWAY CONSTRUCTION SHALL CONFORM TO CURRENT DOUGLAS COUNTY ROADWAY DESIGN AND CONSTRUCTION STANDARDS.
3. ALL MATERIALS AND WORKMANSHIP SHALL BE SUBJECT TO INSPECTION BY THE CITY OF LONE TREE ENGINEERING DIVISION. THE CITY RESERVES THE RIGHT TO ACCEPT OR REJECT ANY SUCH MATERIALS AND WORKMANSHIP THAT DOES NOT CONFORM TO ITS STANDARDS AND SPECIFICATIONS.
4. THE CONTRACTOR SHALL NOTIFY THE CITY OF LONE TREE PUBLIC WORKS, INSPECTION SECTION, (303) 662-8112, A MINIMUM OF 48 HOURS AND A MAXIMUM OF 96 HOURS PRIOR TO STARTING CONSTRUCTION, AND/OR BEFORE RESTARTING CONSTRUCTION AFTER A SHUTDOWN OF MORE THAN 10 DAYS.
5. LOCATION OF EXISTING UTILITIES SHALL BE VERIFIED BY THE CONTRACTOR PRIOR TO ACTUAL CONSTRUCTION. FOR INFORMATION, CONTACT: UTILITY NOTIFICATION CENTER OF COLORADO (UNCC) AT (800) 922-1987 OR 811
6. THE CONTRACTOR SHALL HAVE ONE (1) SIGNED COPY (SIGNED BY BOTH DESIGN ENGINEER AND CITY OF LONE TREE) OF THE CONSTRUCTION PLANS AND GESC REPORT AND PLAN, AND ONE (1) COPY OF THE DOUGLAS COUNTY ROADWAY DESIGN AND CONSTRUCTION STANDARDS AT THE JOB SITE AT ALL TIMES.
7. ALL PROPOSED STREET CUTS TO EXISTING PAVEMENTS FOR UTILITIES, STORM SEWER, OR OTHER PURPOSES ARE LISTED AND REFERENCED BELOW:
   N/A
8. A ROW/CONSTRUCTION PERMIT MUST BE OBTAINED BEFORE ANY WORK WITHIN EXISTING OR PROPOSED PUBLIC ROW. THE PERMIT APPLICATION MUST BE SUBMITTED TO THE CITY OF LONE TREE ENGINEER FOR REVIEW/PROCESSING A MINIMUM OF 7 DAYS PRIOR TO REQUESTED START FOR THE WORK IN THE ROW.
9. A PLAN FOR TRAFFIC CONTROL DURING CONSTRUCTION SHALL BE SUBMITTED TO THE CITY OF LONE TREE ENGINEER FOR ACCEPTANCE WITH THE PERMIT APPLICATION. AN EXCAVATION OR PUBLIC IMPROVEMENTS CONSTRUCTION PERMIT WILL NOT BE ISSUED WITHOUT AN APPROVED TRAFFIC CONTROL PLAN FOR TRAFFIC CONTROL DURING CONSTRUCTION.
10. THE CONSTRUCTION PLANS SHALL BE CONSIDERED VALID FOR TWO (2) YEARS FROM THE DATE OF CITY OF LONE TREE ACCEPTANCE/APPROVAL. IF APPLICABLE CONSTRUCTION PERMITS HAVE NOT BEEN OBTAINED, AND CONSTRUCTION STARTED WITHIN THAT TIME, THESE PLANS SHALL BE VOID AND WILL BE SUBJECT TO RE-REVIEW AND RE-ACCEPTANCE BY THE CITY OF LONE TREE.
11. CONTRACTOR SHALL NOTIFY THE CITY OF LONE TREE ENGINEER INSPECTOR WHEN WORKING OUTSIDE OF THE PUBLIC RIGHT-OF-WAY ON ANY FACILITY WHICH WILL BE CONVEYED TO THE CITY, URBAN DRAINAGE AND FLOOD CONTROL DISTRICT, OR OTHER SPECIAL DISTRICT FOR MAINTENANCE (STORM SEWER, ENERGY DISSIPATERS, DETENTION OUTLET STRUCTURES, OR OTHER DRAINAGE INFRASTRUCTURES). FAILURE TO NOTIFY ENGINEERING INSPECTOR TO ALLOW THEM TO INSPECT THE CONSTRUCTION MAY RESULT IN NON-ACCEPTANCE OF THE FACILITIES/INFRASTRUCTURE BY CITY AND/OR URBAN DRAINAGE.
12. A TEMPORARY CONSTRUCTION ACCESS PERMIT FROM THE CITY OF LONE TREE MAY BE REQUIRED FOR ANY PROJECT.
13. THE CITY OF LONE TREE SHALL NOT BE RESPONSIBLE FOR MAINTENANCE OF ROADWAY AND APPURTENANT IMPROVEMENTS, INCLUDING STORM DRAINAGE INFRASTRUCTURE, FOR THE FOLLOWING PRIVATE STREETS: VIBRATO LANE AND MONTOSO ROAD

DRAINAGE STRUCTURE NOTES

1. CONCRETE WORK SHALL CONFORM TO ACI 301, ACI 350.
2. ALL REINFORCING STEEL SHALL BE DEFORMED BARS CONFORMING TO ASTM-615, GRADE 60.
3. ALL EXPOSED CONCRETE SHALL HAVE A CDOT CLASS 2 OR 5 FINISH.
4. ALL EXPOSED CONCRETE CORNERS SHALL HAVE ¾" CHAMFERS.
5. DETAILING, FABRICATION, AND PLACING OF REBAR SHALL BE IN ACCORDANCE WITH ACI 315.
6. CONSTRUCTION TOLERANCES SHALL BE IN ACCORDANCE WITH ACI 347.
7. ALL MANHOLES SHALL BE SLAB BASE UNLESS SPECIFIED OTHERWISE. MANHOLE SHALL BE FABRICATED IN ACCORDANCE WITH CDOT STANDARD M-604-20.
8. COORDINATES FOR MANHOLES AND AREA INLETS ARE SHOWN AT THE CENTER OF THE STRUCTURE. COORDINATES FOR MOUNTABLE CURB INLETS ARE SHOWN ALONG THE FLOWLINE AT CENTER OF THE STRUCTURE.
9. ALL TYPE C AND D INLETS SHALL HAVE CLOSE MESH GRATES UNLESS SPECIFIED OTHERWISE.
10. LENGTH OF FABRICATED BAR GRATING PANELS IS LENGTH OF BEARING BARS, WIDTH REFERS TO DIMENSION PERPENDICULAR TO BEARING BARS. CONTRACTOR IS RESPONSIBLE FOR VERIFYING PANEL DIMENSIONS GIVEN PRIOR TO FABRICATION.
11. TWO MANHOLE ACCESS POINTS ARE REQUIRED ON ALL TYPE R CURB INLETS GREATER THAN OR EQUAL TO TEN FEET IN LENGTH.
12. EPOXY COATED REBAR IS REQUIRED ON ALL DRAINAGE STRUCTURES.
13. THE CITY OF LONE TREE REQUIRES CLASS D CONCRETE FOR ALL DRAINAGE STRUCTURES.
14. ALL RCP STORM SEWERS MUST USE ASTM C443 WATERTIGHT GASKETS PER THE CURRENT DOUGLAS COUNTY AND URBAN DRAINAGE DESIGN CRITERIA.
15. ALL RCP SHALL BE CLASS III STORM SEWER PIPE UNLESS OTHERWISE SPECIFIED.
16. JOINT RESTRAINTS ARE REQUIRED FOR A MINIMUM OF THE LAST TWO PIPE JOINTS AND FLARED END SECTIONS OF AN RCP OUTFALL.
17. PRECAST INLETS AND MANHOLE BASES ARE NOT ALLOWED.
18. TOE WALLS ARE REQUIRED ON FLARED END SECTIONS AT THE OUTLET END OF CULVERTS AND STORM SEWER OUTFALLS. FILTER FABRIC IS REQUIRED UNDER ALL RIPRAP PADS.

ROADWAY NOTES

1. GUTTERS SHALL BE AT LEAST 6" THICK.
2. ALL CURBS SHALL USE THE CATCH SECTION UNLESS OTHERWISE NOTED.
3. ALL COMBINATION CURB, GUTTER AND SIDEWALKS TO BE 6" THICK (MIN.). SIDEWALKS WITH VERTICAL CURB AND GUTTER TO BE 6" THICK (MIN.).
4. NON-LANDSCAPED MEDIAN ISLANDS SHALL BE COVERED WITH AN ACCEPTABLE IMPERMEABLE SURFACE.
5. IF ANY SECTION OF A DETACHED SIDEWALK IS TO BE PLACED OUTSIDE OF THE ROAD RIGHT-OF-WAY, THEN A SIDEWALK EASEMENT SHALL BE REQUIRED TO MAINTAIN PUBLIC USE.
6. PLACEMENT, MOISTURE AND DENSITY CONTROL FOR SUBGRADE, SUBBASE, AND SURFACING MATERIALS SHALL BE IN COMPLIANCE WITH THE REQUIREMENTS OF CHAPTER 8 OF THE DOUGLAS COUNTY ROADWAY DESIGN AND CONSTRUCTION STANDARDS.
7. ALL STATIONING IS BASED ON CENTERLINE OF ROADWAYS UNLESS OTHERWISE NOTED.
8. PAVING, INCLUDING CONSTRUCTION OF CURB AND GUTTER (WHEN USED), SHALL NOT START UNTIL A PAVEMENT DESIGN REPORT AND SUBGRADE COMPACTION TESTS ARE ACCEPTED BY THE ENGINEERING INSPECTION DIVISION FOR ALL PUBLIC AND PRIVATE ROADS.
9. STANDARD DOUGLAS COUNTY HANDICAP RAMPS ARE TO BE CONSTRUCTED AT ALL CURB RETURNS AND AT MID-BLOCK LOCATIONS OPPOSITE OF ONE OF THE CURB RETURNS OF ALL "T" INTERSECTIONS AS IDENTIFIED ON THESE PLANS.

DRAINAGE GENERAL NOTES

1. PROJECT FACILITIES ARE TO BE LOCATED BASED ON THE SURVEY COORDINATES, ELEVATIONS, DIMENSIONS, AND/OR GEOMETRIC DESIGN DATA PROVIDED ON THE DRAWINGS.
2. THE CONTRACTOR IS SOLELY RESPONSIBLE FOR PROVIDING STABLE EXCAVATIONS AND TEMPORARY SLOPES AND FOR SATISFYING ALL APPLICABLE OSHA, FEDERAL, STATE, AND LOCAL REGULATIONS. TEMPORARY EXCAVATIONS SHALL PROVIDE, AT MINIMUM, THE TRENCH DIMENSIONS AND CLEARANCES SHOWN OR SPECIFIED. TEMPORARY CONSTRUCTION SLOPES SHALL BE SLOPED, SHORED, SHEETED, AND/OR BRACED IN ACCORDANCE WITH STABILITY REQUIREMENTS AND APPLICABLE REGULATIONS, AND SHALL BE NO STEEPER THAN THE SLOPES SHOWN OR SPECIFIED WITHOUT THE APPROVAL OF THE ENGINEER. ANY SUCH APPROVALS BY THE ENGINEER WILL NOT RELIEVE THE CONTRACTOR FROM SOLE RESPONSIBILITY FOR PROVIDING STABLE EXCAVATIONS AND TEMPORARY SLOPES.
3. EXISTING FACILITIES NOT INDICATED TO BE REMOVED SHALL BE PROTECTED IN PLACE OR REMOVED AND REPLACED IN KIND, AS APPROVED BY ENGINEER.
4. THE WORK WILL TAKE PLACE IN AND AROUND DRAINAGE SWALES AND THE HAPPY CANYON CREEK, SUBJECT TO PERIODIC FLOODING. THE CONTRACTOR SHALL BE RESPONSIBLE FOR THE CONTROL OF SURFACE AND SUBSURFACE WATER DURING THE COURSE OF THE WORK. ANY DAMAGE TO THE WORK RESULTING FROM SURFACE FLOWS, BASE FLOWS, OR FLOOD FLOWS INCLUDING BUOYANCY FORCES ON PIPELINES AND OTHER FACILITIES SHALL BE CORRECTED BY THE CONTRACTOR AT THE CONTRACTOR'S SOLE COST. THE CONTRACTOR SHALL BE RESPONSIBLE FOR OBTAINING AND SATISFYING THE REQUIREMENTS OF ANY APPLICABLE PERMITS PERTAINING TO WATER AND EROSION CONTROL.
5. CONTACT THE ENGINEER FOR CLARIFICATIONS OF ANY ABBREVIATIONS SHOWN ON THE DRAWINGS.
6. THE SITE WHERE THE WORK IS TO BE PERFORMED SHALL BE OVERLOT GRADED. TOPSOIL SHALL BE SPREAD IN OPEN SPACE AREAS TO A DEPTH OF APPROXIMATELY 6-INCHES. ALL DISTURBED AREAS SHALL BE SEEDED AND MULCHED, AND SOME AREAS COVERED WITH EROSION CONTROL BLANKETS, UNLESS OTHERWISE DIRECTED IN THE PLANS OR BY THE ENGINEER. CARE SHALL BE TAKEN TO AVOID DISTURBING ANY OPEN SPACE AREAS EXCEPT THE MINIMUM NECESSARY TO PERFORM THE WORK. TOPSOIL IN ANY WORK AREAS OR ACCESS ROADS WITHIN THE OPEN SPACE SHALL BE STRIPPED AND STOCKPILED PRIOR TO THE WORK, PROTECTED FROM MIXING WITH ANY OTHER MATERIALS DURING THE WORK, AND REPLACED TO A LOOSE DEPTH OF 7- TO 8- INCHES (FINAL DEPTH AFTER SETTLEMENT SHALL BE 6- INCHES MINIMUM) AS THE WORK IS BEING COMPLETED. WHERE BLANKETS EXIST, THE MINIMUM AREA OF BLANKET TO ALLOW WORK TO PROGRESS SHALL BE REMOVED AND THEN THE REMOVED OR NEW BLANKET REPLACED AFTER UNDERLYING WORK IS COMPLETE (EXCEPT NO TEMPORARY BLANKET NEEDS TO BE REPLACED OVER ROCK OR COIR BLANKET SHOWN IN THE PLANS). JUST PRIOR TO REPLACEMENT OF TOPSOIL AFTER UNDERLYING WORK IS COMPLETE AND APPROVED, THE UNDERLYING SUBGRADE IN OPEN SPACE AREAS SHALL BE LOOSENED BY TILLING TO A DEPTH OF 12- INCHES UNTIL CLODS ARE NO LARGER THAN 3 INCHES, AND APPROVED BY THE ENGINEER. THIS NOTE ALSO APPLIES TO AREAS WHERE COIR MAT IS TO BE INSTALLED.
7. IT SHALL BE THE CONTRACTOR'S RESPONSIBILITY TO PROTECT ANY COMPLETED WORK FROM DISTURBANCE OR DAMAGE DURING THE COURSE OF THE WORK. IF REQUESTED BY THE CONTRACTOR AND APPROVED BY THE OWNER, SIGNIFICANT COMPLETED SECTIONS OF THE WORK MAY BE ACCEPTED AS FINAL PRIOR TO THE COMPLETION OF THE ENTIRE PROJECT. ANY SUCH EARLY ACCEPTANCE WILL NEED TO BE IN WRITING BY THE ENGINEER AND OWNER AND THOSE PORTIONS OF THE WORK SHALL BE PROTECTED BY THE CONTRACTOR AGAINST VEHICLES RUNNING OVER THE AREA BY ENCIRCLING THE WORK WITH FLAGGING OR FENCING OR BY OTHER MEANS AGREED TO BY THE OWNER AND MAINTAINED BY THE CONTRACTOR UNTIL THE END OF THE P

LAYER LINETYPE LEGEND

	EXISTING	PROPOSED
PHASE LINE		
MATCH LINE		
SECTION LINE		
BOUNDARY LINE		
PROPERTY LINE		
EASEMENT LINE		
RIGHT OF WAY		
R.O.W. A LINE	A	A
CENTERLINE		
CITY LIMITS		
WIRE FENCE	X	X
CHAIN LINK FENCE	O	O
WOOD FENCE	◇	◆
MASONRY FENCE	□	■
GUARDRAIL		
CONC. BARRIER		
CABLE TV	TV	TV
ELECTRIC	E	E
FIBER OPTIC	FO	FO
GAS MAIN	G	G
IRRIGATION MAIN	IR	IR
OIL/PETRO. MAIN	O	O
OVERHEAD UTILITY	OHU	OHU
SANITARY SEWER	S	
STORM DRAIN		
TELEPHONE	T	T
WATER MAIN	W	W
RAW WATER LINE	RWL	RWL
SWALE/WATERWAY FLOWLINE		
DIVERSION DITCH		
DIVERSION CHANNEL		
MAJOR DRAINAGE BASIN		
MINOR DRAINAGE BASIN		
TOP OF SLOPE		
TOE OF SLOPE		
EDGE OF WATER		
INDEX CONTOUR	6100	6100
INTERMEDIATE CONTOUR		
DEPRESSION CONT. (INDEX)	6100	6100
DEPRESSION CONT. (INTER)		
TOP OF CUTS		
TOE OF FILLS		
CUT AND FILL LINE		C/F
SILT FENCE	SF	SF
100 YEAR FLOODPLAIN	100YR	100YR
500 YEAR FLOODPLAIN	500YR	500YR
FLOODWAY	FLDWY	FLDWY
BASE FLOOD ELEVATION		
EDGE OF WETLANDS		
STONE WALL		

LANDSCAPE LEGEND

	EXISTING	PROPOSED
TREE – CONIFEROUS		
TREE – DECIDUOUS		
SHRUB/BUSH		
SHRUBS AND BUSHES		
IRRIGATION BOX		
IRRIGATION SPRINKLER		
IRRIGATION VALVE		
BOLLARD		
FLAGPOLE	FP	

UTILITIES LEGEND

	EXISTING	PROPOSED
STORM SEWER		
MANHOLE		
STORM INLET		
AREA INLET – SQUARE		
AREA INLET – ROUND		
FLARED END SECTION		
RIPRAP		
SANITARY SEWER		
LINE MARKER	Mkr San	
SERVICE MARKER		
CLEAN-OUT		
MANHOLE W/ DIRECTIONAL FLOW ARROW		
WATER LINE		
LINE MARKER	Mkr W	
SERVICE MARKER		
FIRE HYDRANT		
FIRE CONNECTION		
MANHOLE		
BEND		
BLOW-OFF VALVE		
WELL	WELL	WELL
METER		
VALVE		
REDUCER		
THRUST BLOCK		
CROSS		
PLUG W/ THRUST BLOCK		
TEE		
REVERSE ANCHOR		
ANODE		
AIR & VACUUM VALVE ASSEMBLY		
TRANSMISSION BLOW-OFF ASSEMBLY		
GAS LINE		
MARKER	Mkr G	
SERVICE MARKER		
METER		
VALVE		
PLUG		
TEE		
DRY UTILITIES		
CABLE TV MARKER	Mkr TV	
CABLE TELEVISION PEDESTAL	TV	
ELECTRIC MARKER	Mkr E	
ELECTRIC SERVICE MARKER		
ELECTRICAL PEDESTAL	E	
ELECTRICAL METER	E	
ELECTRICAL MANHOLE	E	
FIBER-OPTIC MARKER	Mkr FO	
IRRIGATION PEDESTAL	I	
TELEPHONE MARKER	Mkr T	
TELEPHONE PEDESTAL	T	
TELEPHONE MANHOLE	T	
UTILITY POLE		
GUY ANCHOR		
GUY POLE		
MISC. UTILITIES		
VENT PIPE	VP	VP
TEST HOLE DESIGNATOR	TH# FIRM FIRM/AGENCY	

MONUMENTATION LEGEND

ALUMINUM CAP – FOUND	AC
BRASS CAP – FOUND	BC
BENCHMARK – FOUND	
CROSS – FOUND	
MONUMENT – SET	
MONUMENT – FOUND (DEFAULT)	
MONUMENT – FOUND (ALTERNATE 1)	
MONUMENT – FOUND (ALTERNATE 2)	
MONUMENT – FOUND (ALTERNATE 3)	
MONUMENT – FOUND (ALTERNATE 4)	
MONUMENT – FOUND (ALTERNATE 5)	
MONUMENT – FOUND (ALTERNATE 6)	
MONUMENT – FOUND (ALTERNATE 7)	
NAIL & WASHER – FOUND	NAIL & WASHER
PANEL – FOUND	
PK NAIL – FOUND	PK NAIL
ROW MONUMENT – FOUND	
ROW MARKER – FOUND	
SECTION CORNER – FOUND	
SECTION CORNER – SET	
QUARTER-SECTION CORNER – FOUND	
QUARTER-SECTION CORNER – SET	
SECTION CENTER – FOUND	
SECTION CENTER – FOUND	
CONTROL/TRAVERSE POINT – SET	

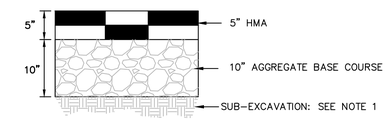

HILLCAMP TR PAVEMENT SECTION

N.T.S.

NOTES:
1. ADDITIONAL SUB-EXCAVATION (3 TO 5 FEET) MAY BE MERITED.
2. ASPHALT, BASE COURSE DEPTH, AND SUBGRADE PREPARATION IS TO BE IN ACCORDANCE WITH GEOTECHNICAL RECOMMENDATIONS.
3. SEE FINAL PAVEMENT DESIGN REPORT PREPARED BY GEOTECHNICAL ENGINEER FOR FINAL PAVEMENT SECTION AND RECOMMENDATIONS.

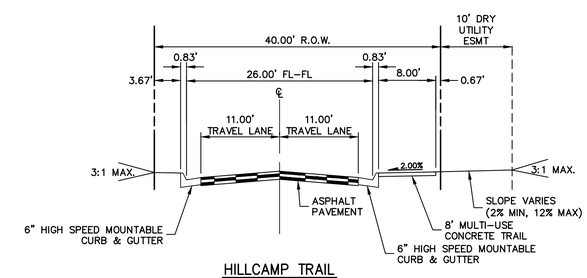

HILLCAMP TRAIL

ENTRY ROAD

Know what's **below.**
Call before you dig.

ENGINEER'S STATEMENT

PREPARED UNDER MY SUPERVISION

KEVIN ROHRBOUGH, PE
COLORADO P.E. 48992
FOR AND ON BEHALF OF JR ENGINEERING, LLC

DATE

COLORADO REGISTERED KEVIN S. ROHRBOUGH 48992 9/4/26 PROFESSIONAL ENGINEER

CITY OF LONE TREE

DATE

THESE CONSTRUCTION PLANS HAVE BEEN REVIEWED BY THE CITY OF LONE TREE FOR STREET AND DRAINAGE, SIGNAGE AND STRIPING IMPROVEMENTS ONLY.

ENGINEERING DIVISION ACCEPTANCE BLOCK

UNTIL SUCH TIME AS THESE DRAWINGS ARE APPROVED BY THE APPROPRIATE REVIEWING AGENCIES, JR ENGINEERING APPROVES THEIR USE ONLY FOR THE PURPOSES DESIGNATED BY WRITTEN AUTHORIZATION.

PREPARED FOR
RAMPART RANGE METRO DISTRICT
2001 16TH STREET
SUITE 1700
DENVER, CO 80202
PHONE: 303-779-5710

J·R ENGINEERING
A Westrian Company
Centennial 303-740-9393 • Colorado Springs 719-593-2593
Fort Collins 970-491-9888 • www.jrengineering.com

No.	REVISION	BY	DATE
0	FOR APPROVAL	KJR	9/2/26

H-SCALE	N/A
V-SCALE	N/A
DATE	9/4/26
DESIGNED BY	N/A
DRAWN BY	KJC
CHECKED BY	

HILLCAMP TRAIL

LEGEND AND STREET SECTION

SHEET 3 OF 80

JOB NO. 15950.18

C:\Users\CrumpK.JRENGINEERING\DC\ACCDocs\JR Engineering\15950.12\Project Files\15950.18 Cabela Drive\Drawings\Sheet Drawings\15950.18 Cabela Drive Col_T\15950.18 CV01.dwg, Legend, 9/8/2026 2:47:14 PM, crumpk

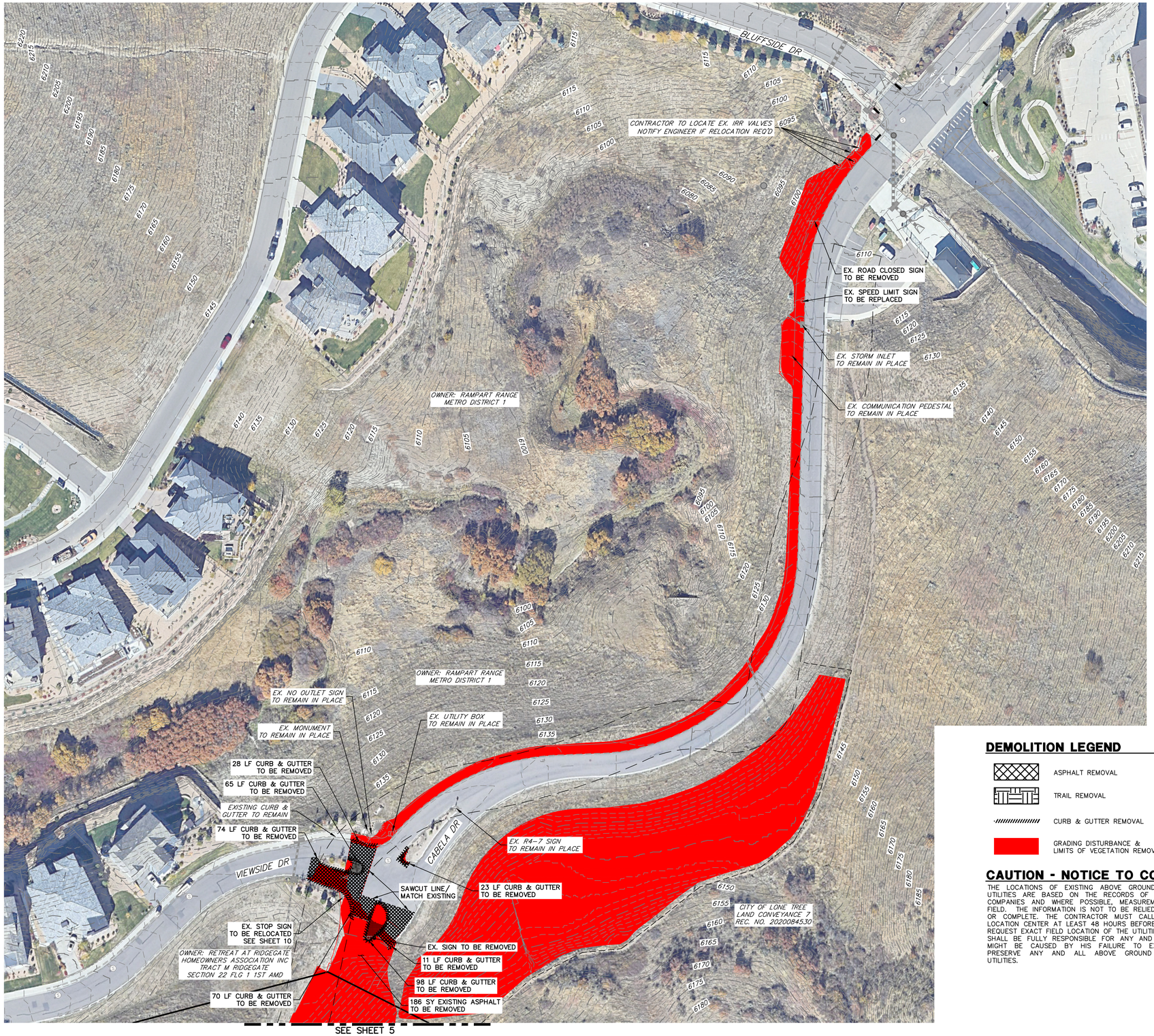

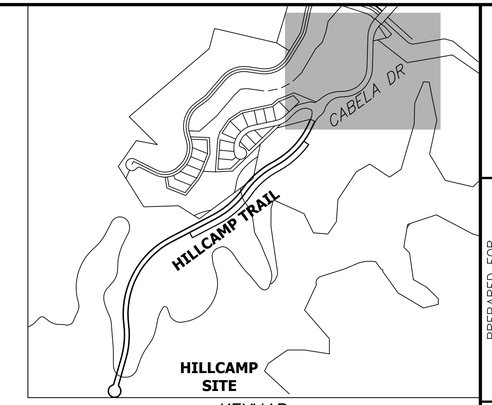

KEYMAP
SCALE: 1" = 600'

DEMOLITION NOTES:

1. NOT ALL REMOVALS WARRANTED FOR SITE CONSTRUCTION MAY BE SHOWN ON THIS PLAN. IT IS THE CONTRACTOR'S RESPONSIBILITY TO IDENTIFY ALL REMOVALS AND/OR RELOCATIONS REQUIRED FOR THE PROJECT CONSTRUCTION. ALL QUESTIONS REGARDING DEMOLITION SHALL BE SUBMITTED TO THE OWNER IN WRITING PRIOR TO BID.
2. ALL DEMOLITION, REMOVAL, DISPOSAL AND ABANDONMENT OF UTILITIES, STRUCTURES, SITE IMPROVEMENTS, AND SITE FURNISHINGS SHALL BE IN ACCORDANCE WITH ALL LOCAL, STATE, AND FEDERAL REQUIREMENTS.
3. ALL EXISTING LANDSCAPING AND IRRIGATION SYSTEMS WITHIN THE PROJECT LIMITS SHALL BE RESET AND REPAIRED TO EXISTING CONDITIONS OR BETTER.
4. CONTRACTOR SHALL VERIFY ALL UTILITY MAIN AND LATERAL LOCATIONS AND EXISTING SITE CONDITIONS PRIOR TO PROCEEDING WITH DEMOLITION. ANY SITE CONDITIONS THAT ARE NOT AS SHOWN ON THE DEMOLITION PLAN SHALL BE REPORTED TO THE OWNER PRIOR TO BID.
5. CONTRACTOR SHALL REMOVE OR RELOCATE EXISTING UTILITIES PER UTILITY COMPANY REQUIREMENTS. CONTRACTOR SHALL COORDINATE ANY REQUIRED REMOVALS, DISCONNECTIONS, AND/OR RELOCATIONS WITH THE APPROPRIATE UTILITY COMPANY PRIOR TO DEMOLITION.
6. CONTRACTOR SHALL PROVIDE ALL NECESSARY TRAFFIC CONTROL (SIGNS, BARRICADES, FLAGMEN, LIGHTS, ETC.) IN ACCORDANCE WITH THE MUTCD, CURRENT EDITION AND THE GOVERNING JURISDICTION'S STANDARDS AND SPECIFICATIONS AS REQUIRED FOR THE WORK.
7. CONTRACTOR SHALL DISPOSE OF AND TRANSPORT DEBRIS TO AREA(S) OBTAINED BY CONTRACTOR. CONTRACTOR SHALL NOT STORE OR BURN MATERIALS ON SITE. CONTRACTOR SHALL HANDLE AND DISPOSE OF ALL DEBRIS IN ACCORDANCE WITH ALL LOCAL STATE AND FEDERAL REGULATIONS. DISPOSAL SHALL BE TRANSPORTED TO AN APPROVED LANDFILL OR OTHER APPROVED FACILITY.
8. CONTRACTOR SHALL OBTAIN ALL PERMITS AND LICENSES REQUIRED FOR DEMOLITION OF WORK SHOWN.
9. CONTRACTOR SHALL PROTECT ALL SURVEY MONUMENTATION AND BENCHMARK(S). CONTRACTOR SHALL HAVE A LICENSED SURVEYOR REPLACE ANY DAMAGED OR DISTURBED MONUMENTATION AT THE CONTRACTOR'S COST.
10. CONTRACTOR SHALL PROTECT ALL EXISTING STRUCTURES, FEATURES, IMPROVEMENTS, AND UTILITIES (OVERHEAD OR UNDERGROUND) AT ALL TIMES DURING DEMOLITION AND CONSTRUCTION. CONTRACTOR WILL BE RESPONSIBLE FOR ALL RESULTANT COSTS DUE TO SUCH DAMAGES.
11. EXISTING SOFT TRACK TRAIL TO BE RELOCATED IN ADVANCE OF ROADWAY GRADING ADJACENT TO THE TRAIL

DEMOLITION LEGEND

- ASPHALT REMOVAL
- TRAIL REMOVAL
- CURB & GUTTER REMOVAL
- GRADING DISTURBANCE & LIMITS OF VEGETATION REMOVAL

50 25 0 50 100
ORIGINAL SCALE: 1" = 50'

Know what's **below.** **Call** before you dig.

CAUTION - NOTICE TO CONTRACTOR

THE LOCATIONS OF EXISTING ABOVE GROUND AND UNDERGROUND UTILITIES ARE BASED ON THE RECORDS OF THE VARIOUS UTILITY COMPANIES AND WHERE POSSIBLE, MEASUREMENTS TAKEN IN THE FIELD. THE INFORMATION IS NOT TO BE RELIED ON AS BEING EXACT OR COMPLETE. THE CONTRACTOR MUST CALL THE LOCAL UTILITY LOCATION CENTER AT LEAST 48 HOURS BEFORE ANY EXCAVATION TO REQUEST EXACT FIELD LOCATION OF THE UTILITIES. THE CONTRACTOR SHALL BE FULLY RESPONSIBLE FOR ANY AND ALL DAMAGES WHICH MIGHT BE CAUSED BY HIS FAILURE TO EXACTLY LOCATE AND PRESERVE ANY AND ALL ABOVE GROUND AND UNDERGROUND UTILITIES.

CITY OF LONE TREE

DATE

THESE CONSTRUCTION PLANS HAVE BEEN REVIEWED BY THE CITY OF LONE TREE FOR STREET AND DRAINAGE, SIGNAGE AND STRIPING IMPROVEMENTS ONLY.

ENGINEERING DIVISION ACCEPTANCE BLOCK

ENGINEER'S STATEMENT

PREPARED UNDER MY SUPERVISION

KEVIN ROHRBOUGH, PE
COLORADO P.E. 48992
FOR AND ON BEHALF OF JR ENGINEERING, LLC

DATE

COLORADO REGISTERED PROFESSIONAL ENGINEER KEVIN J. ROHRBOUGH 48992 9/4/26

UNTIL SUCH TIME AS THESE DRAWINGS ARE APPROVED BY THE APPROPRIATE REVIEWING AGENCIES, JR ENGINEERING APPROVES THEIR USE ONLY FOR THE PURPOSES DESIGNATED BY WRITTEN AUTHORIZATION.

PREPARED FOR
RAMPART RANGE METRO DISTRICT
8390 E CRESCENT PKWY
SUITE 300
GREENWOOD VILLAGE, CO 80111
PHONE: 303-779-5710

J·R ENGINEERING
A Westrian Company
Centennial 303-740-9393 • Colorado Springs 719-593-2593
Fort Collins 970-491-9888 • www.jrengineering.com

No.	REVISION	BY	DATE
1	1ST CoLT SUBMITTAL	KJR	3/20/25
2	2ND CoLT SUBMITTAL	KJR	8/15/25
3	3RD CoLT SUBMITTAL	KJR	11/20/25
4	4TH CoLT SUBMITTAL	KJR	3/27/26

H-SCALE	1"=50'
V-SCALE	N/A
DATE	3/27/26
DESIGNED BY	KAC
DRAWN BY	KAC
CHECKED BY	

HILLCAMP TRAIL

EXISTING CONDITIONS AND DEMOLITION PLAN

SHEET 4 OF 77

JOB NO. 15950.18

C:\Users\Ckrumpk_JR\ENGINEERING\DC\ACCDocs\JR Engineering\15950.18 Cabela Drive\Project Files\15950.18 Cabela Drive\Drawings\Sheet Drawings\15950.18 DM01.dwg, DM00, 9/8/2026 2:47:35 PM, ckrumpk

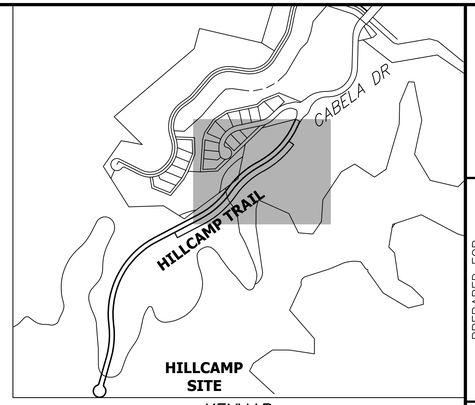

KEYMAP
SCALE: 1" = 600'

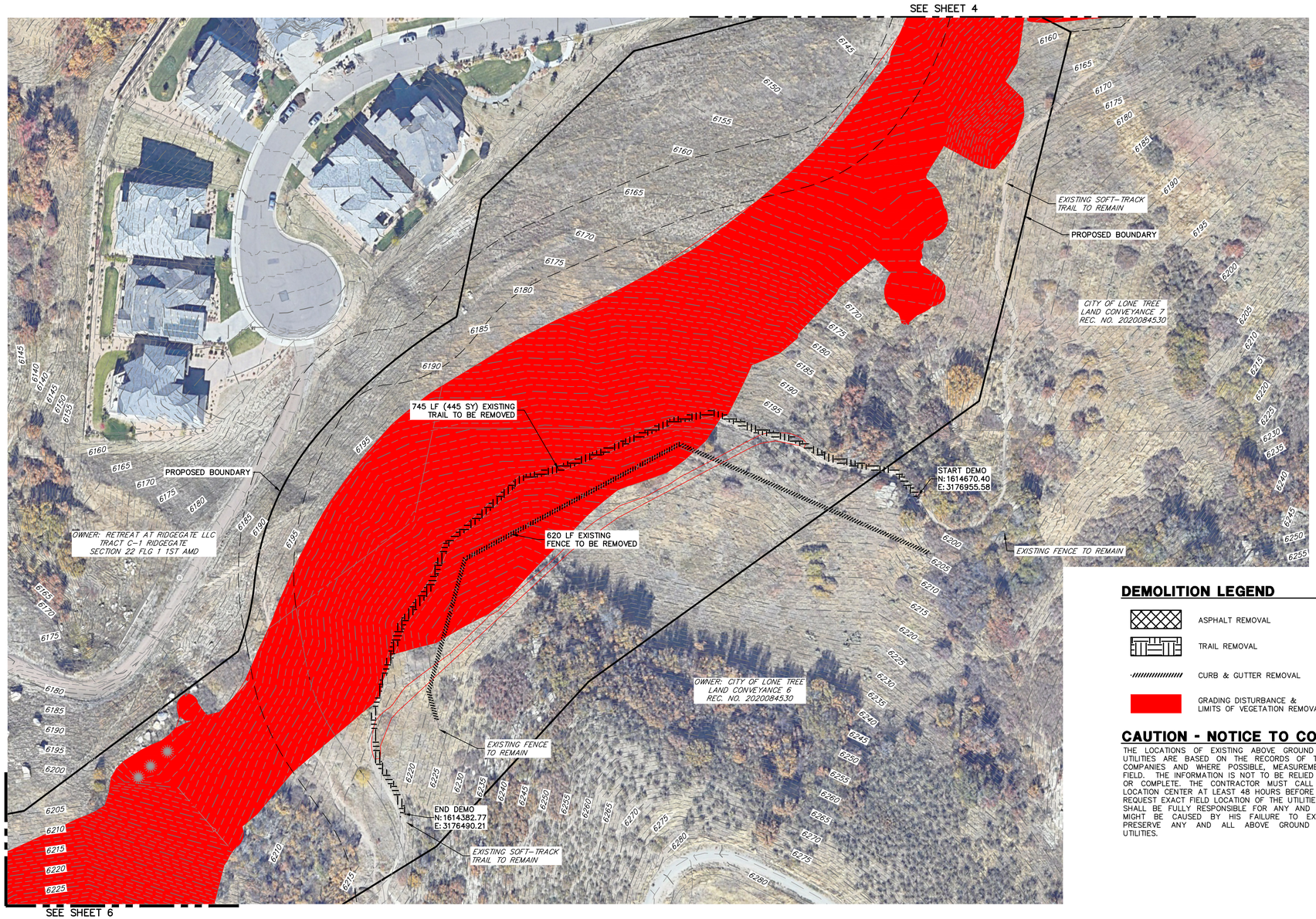

DEMOLITION NOTES:

1. NOT ALL REMOVALS WARRANTED FOR SITE CONSTRUCTION MAY BE SHOWN ON THIS PLAN. IT IS THE CONTRACTOR'S RESPONSIBILITY TO IDENTIFY ALL REMOVALS AND/OR RELOCATIONS REQUIRED FOR THE PROJECT CONSTRUCTION. ALL QUESTIONS REGARDING DEMOLITION SHALL BE SUBMITTED TO THE OWNER IN WRITING PRIOR TO BID.
2. ALL DEMOLITION, REMOVAL, DISPOSAL AND ABANDONMENT OF UTILITIES, STRUCTURES, SITE IMPROVEMENTS, AND SITE FURNISHINGS SHALL BE IN ACCORDANCE WITH ALL LOCAL, STATE, AND FEDERAL REQUIREMENTS.
3. ALL EXISTING LANDSCAPING AND IRRIGATION SYSTEMS WITHIN THE PROJECT LIMITS SHALL BE RESET AND REPAIRED TO EXISTING CONDITIONS OR BETTER.
4. CONTRACTOR SHALL VERIFY ALL UTILITY MAIN AND LATERAL LOCATIONS AND EXISTING SITE CONDITIONS PRIOR TO PROCEEDING WITH DEMOLITION. ANY SITE CONDITIONS THAT ARE NOT AS SHOWN ON THE DEMOLITION PLAN SHALL BE REPORTED TO THE OWNER PRIOR TO BID.
5. CONTRACTOR SHALL REMOVE OR RELOCATE EXISTING UTILITIES PER UTILITY COMPANY REQUIREMENTS. CONTRACTOR SHALL COORDINATE ANY REQUIRED REMOVALS, DISCONNECTIONS, AND/OR RELOCATIONS WITH THE APPROPRIATE UTILITY COMPANY PRIOR TO DEMOLITION.
6. CONTRACTOR SHALL PROVIDE ALL NECESSARY TRAFFIC CONTROL (SIGNS, BARRICADES, FLAGMEN, LIGHTS, ETC.) IN ACCORDANCE WITH THE MUTCD, CURRENT EDITION AND THE GOVERNING JURISDICTION'S STANDARDS AND SPECIFICATIONS AS REQUIRED FOR THE WORK.
7. CONTRACTOR SHALL DISPOSE OF AND TRANSPORT DEBRIS TO AREA(S) OBTAINED BY CONTRACTOR. CONTRACTOR SHALL NOT STORE OR BURN MATERIALS ON SITE. CONTRACTOR SHALL HANDLE AND DISPOSE OF ALL DEBRIS IN ACCORDANCE WITH ALL LOCAL STATE AND FEDERAL REGULATIONS. DISPOSAL SHALL BE TRANSPORTED TO AN APPROVED LANDFILL OR OTHER APPROVED FACILITY.
8. CONTRACTOR SHALL OBTAIN ALL PERMITS AND LICENSES REQUIRED FOR DEMOLITION OF WORK SHOWN.
9. CONTRACTOR SHALL PROTECT ALL SURVEY MONUMENTATION AND BENCHMARK(S). CONTRACTOR SHALL HAVE A LICENSED SURVEYOR REPLACE ANY DAMAGED OR DISTURBED MONUMENTATION AT THE CONTRACTOR'S COST.
10. CONTRACTOR SHALL PROTECT ALL EXISTING STRUCTURES, FEATURES, IMPROVEMENTS, AND UTILITIES (OVERHEAD OR UNDERGROUND) AT ALL TIMES DURING DEMOLITION AND CONSTRUCTION. CONTRACTOR WILL BE RESPONSIBLE FOR ALL RESULTANT COSTS DUE TO SUCH DAMAGES.
11. EXISTING SOFT TRACK TRAIL TO BE RELOCATED IN ADVANCE OF ROADWAY GRADING ADJACENT TO THE TRAIL

DEMOLITION LEGEND

- ASPHALT REMOVAL
- TRAIL REMOVAL
- CURB & GUTTER REMOVAL
- GRADING DISTURBANCE & LIMITS OF VEGETATION REMOVAL

CAUTION - NOTICE TO CONTRACTOR

THE LOCATIONS OF EXISTING ABOVE GROUND AND UNDERGROUND UTILITIES ARE BASED ON THE RECORDS OF THE VARIOUS UTILITY COMPANIES AND WHERE POSSIBLE, MEASUREMENTS TAKEN IN THE FIELD. THE INFORMATION IS NOT TO BE RELIED ON AS BEING EXACT OR COMPLETE. THE CONTRACTOR MUST CALL THE LOCAL UTILITY LOCATION CENTER AT LEAST 48 HOURS BEFORE ANY EXCAVATION TO REQUEST EXACT FIELD LOCATION OF THE UTILITIES. THE CONTRACTOR SHALL BE FULLY RESPONSIBLE FOR ANY AND ALL DAMAGES WHICH MIGHT BE CAUSED BY HIS FAILURE TO EXACTLY LOCATE AND PRESERVE ANY AND ALL ABOVE GROUND AND UNDERGROUND UTILITIES.

50 25 0 50 100
ORIGINAL SCALE: 1" = 50'

Know what's below. Call before you dig.

CITY OF LONE TREE

DATE

THESE CONSTRUCTION PLANS HAVE BEEN REVIEWED BY THE CITY OF LONE TREE FOR STREET AND DRAINAGE, SIGNAGE AND STRIPING IMPROVEMENTS ONLY.

ENGINEERING DIVISION ACCEPTANCE BLOCK

ENGINEER'S STATEMENT

PREPARED UNDER MY SUPERVISION

KEVIN ROHRBOUGH, PE — DATE
COLORADO P.E. 48992
FOR AND ON BEHALF OF JR ENGINEERING, LLC

COLORADO REGISTERED KEVIN ROHRBOUGH 48992 9/4/26 PROFESSIONAL ENGINEER

UNTIL SUCH TIME AS THESE DRAWINGS ARE APPROVED BY THE APPROPRIATE REVIEWING AGENCIES, JR ENGINEERING APPROVES THEIR USE ONLY FOR THE PURPOSES DESIGNATED BY WRITTEN AUTHORIZATION.

PREPARED FOR
RAMPART RANGE METRO DISTRICT
8390 E CRESCENT PKWY
SUITE 300
GREENWOOD VILLAGE, CO 80111
PHONE: 303-779-5710

J·R ENGINEERING
A Westrian Company
Centennial 303-740-9393 • Colorado Springs 719-593-2593
Fort Collins 970-491-9888 • www.jrengineering.com

No.	REVISION	BY	DATE
1	1ST CoLT SUBMITTAL	KJR	3/20/25
2	2ND CoLT SUBMITTAL	KJR	8/15/25
3	3RD CoLT SUBMITTAL	KJR	11/20/25
4	4TH CoLT SUBMITTAL	KJR	3/27/26

H-SCALE	1"=50'
V-SCALE	N/A
DATE	3/27/26
DESIGNED BY	KAC
DRAWN BY	KAC
CHECKED BY	

HILLCAMP TRAIL

EXISTING CONDITIONS AND DEMOLITION PLAN

SHEET 5 OF 77

JOB NO. 15950.18

C:\Users\CrumpK.JRENGINEERING.DC\ACCDocs\JR Engineering\15950.12\Project Files\15950.18 Cabela Drive\Drawings\Sheet Drawings\15950.18 Cabela Drive Col.T\15950.18 DM01.dwg, DM01, 9/8/2026 2:47:53 PM, crumpk

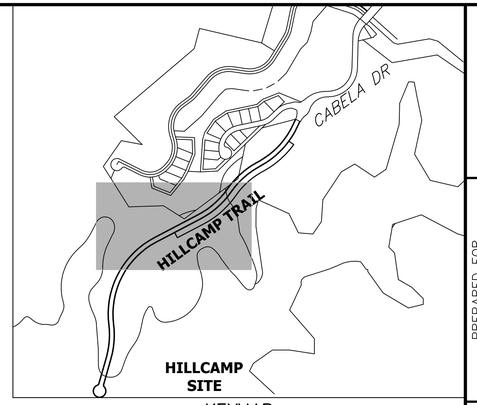

KEYMAP
SCALE: 1" = 600'

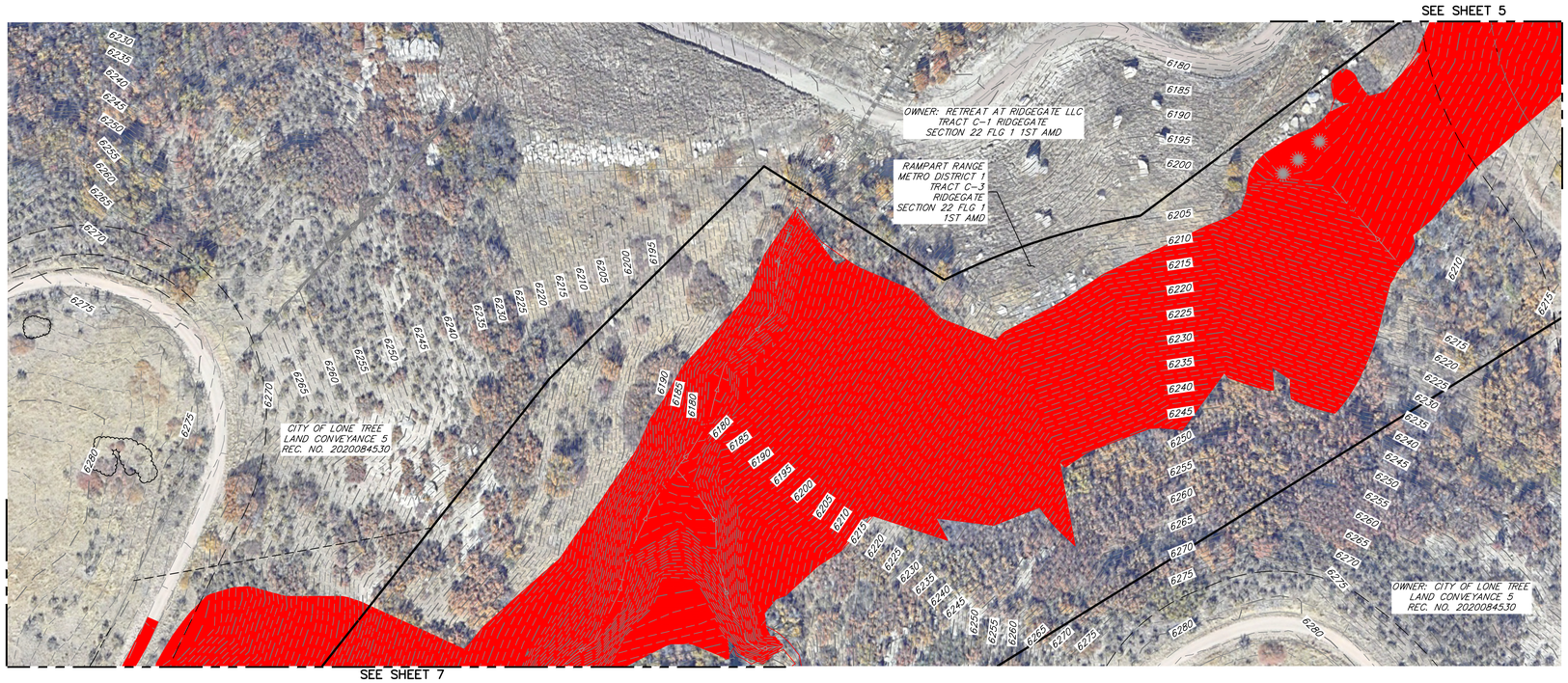

DEMOLITION NOTES:

1. NOT ALL REMOVALS WARRANTED FOR SITE CONSTRUCTION MAY BE SHOWN ON THIS PLAN. IT IS THE CONTRACTOR'S RESPONSIBILITY TO IDENTIFY ALL REMOVALS AND/OR RELOCATIONS REQUIRED FOR THE PROJECT CONSTRUCTION. ALL QUESTIONS REGARDING DEMOLITION SHALL BE SUBMITTED TO THE OWNER IN WRITING PRIOR TO BID.
2. ALL DEMOLITION, REMOVAL, DISPOSAL AND ABANDONMENT OF UTILITIES, STRUCTURES, SITE IMPROVEMENTS, AND SITE FURNISHINGS SHALL BE IN ACCORDANCE WITH ALL LOCAL, STATE, AND FEDERAL REQUIREMENTS.
3. ALL EXISTING LANDSCAPING AND IRRIGATION SYSTEMS WITHIN THE PROJECT LIMITS SHALL BE RESET AND REPAIRED TO EXISTING CONDITIONS OR BETTER.
4. CONTRACTOR SHALL VERIFY ALL UTILITY MAIN AND LATERAL LOCATIONS AND EXISTING SITE CONDITIONS PRIOR TO PROCEEDING WITH DEMOLITION. ANY SITE CONDITIONS THAT ARE NOT AS SHOWN ON THE DEMOLITION PLAN SHALL BE REPORTED TO THE OWNER PRIOR TO BID.
5. CONTRACTOR SHALL REMOVE OR RELOCATE EXISTING UTILITIES PER UTILITY COMPANY REQUIREMENTS. CONTRACTOR SHALL COORDINATE ANY REQUIRED REMOVALS, DISCONNECTIONS, AND/OR RELOCATIONS WITH THE APPROPRIATE UTILITY COMPANY PRIOR TO DEMOLITION.
6. CONTRACTOR SHALL PROVIDE ALL NECESSARY TRAFFIC CONTROL (SIGNS, BARRICADES, FLAGMEN, LIGHTS, ETC.) IN ACCORDANCE WITH THE MUTCD, CURRENT EDITION AND THE GOVERNING JURISDICTION'S STANDARDS AND SPECIFICATIONS AS REQUIRED FOR THE WORK.
7. CONTRACTOR SHALL DISPOSE OF AND TRANSPORT DEBRIS TO AREA(S) OBTAINED BY CONTRACTOR. CONTRACTOR SHALL NOT STORE OR BURN MATERIALS ON SITE. CONTRACTOR SHALL HANDLE AND DISPOSE OF ALL DEBRIS IN ACCORDANCE WITH ALL LOCAL STATE AND FEDERAL REGULATIONS. DISPOSAL SHALL BE TRANSPORTED TO AN APPROVED LANDFILL OR OTHER APPROVED FACILITY.
8. CONTRACTOR SHALL OBTAIN ALL PERMITS AND LICENSES REQUIRED FOR DEMOLITION OF WORK SHOWN.
9. CONTRACTOR SHALL PROTECT ALL SURVEY MONUMENTATION AND BENCHMARK(S). CONTRACTOR SHALL HAVE A LICENSED SURVEYOR REPLACE ANY DAMAGED OR DISTURBED MONUMENTATION AT THE CONTRACTOR'S COST.
10. CONTRACTOR SHALL PROTECT ALL EXISTING STRUCTURES, FEATURES, IMPROVEMENTS, AND UTILITIES (OVERHEAD OR UNDERGROUND) AT ALL TIMES DURING DEMOLITION AND CONSTRUCTION. CONTRACTOR WILL BE RESPONSIBLE FOR ALL RESULTANT COSTS DUE TO SUCH DAMAGES.
11. EXISTING SOFT TRACK TRAIL TO BE RELOCATED IN ADVANCE OF ROADWAY GRADING ADJACENT TO THE TRAIL

DEMOLITION LEGEND

- ASPHALT REMOVAL
- TRAIL REMOVAL
- CURB & GUTTER REMOVAL
- GRADING DISTURBANCE & LIMITS OF VEGETATION REMOVAL

50 25 0 50 100
ORIGINAL SCALE: 1" = 50'

811 Know what's below. Call before you dig.

CAUTION - NOTICE TO CONTRACTOR

THE LOCATIONS OF EXISTING ABOVE GROUND AND UNDERGROUND UTILITIES ARE BASED ON THE RECORDS OF THE VARIOUS UTILITY COMPANIES AND WHERE POSSIBLE, MEASUREMENTS TAKEN IN THE FIELD. THE INFORMATION IS NOT TO BE RELIED ON AS BEING EXACT OR COMPLETE. THE CONTRACTOR MUST CALL THE LOCAL UTILITY LOCATION CENTER AT LEAST 48 HOURS BEFORE ANY EXCAVATION TO REQUEST EXACT FIELD LOCATION OF THE UTILITIES. THE CONTRACTOR SHALL BE FULLY RESPONSIBLE FOR ANY AND ALL DAMAGES WHICH MIGHT BE CAUSED BY HIS FAILURE TO EXACTLY LOCATE AND PRESERVE ANY AND ALL ABOVE GROUND AND UNDERGROUND UTILITIES.

CITY OF LONE TREE

DATE

THESE CONSTRUCTION PLANS HAVE BEEN REVIEWED BY THE CITY OF LONE TREE FOR STREET AND DRAINAGE, SIGNAGE AND STRIPING IMPROVEMENTS ONLY.

ENGINEERING DIVISION ACCEPTANCE BLOCK

ENGINEER'S STATEMENT

PREPARED UNDER MY SUPERVISION

KEVIN ROHRBOUGH, PE
COLORADO P.E. 48992
FOR AND ON BEHALF OF JR ENGINEERING, LLC

DATE

COLORADO REGISTERED KEVIN A. ROHRBOUGH 48992 9/4/26 PROFESSIONAL ENGINEER

UNTIL SUCH TIME AS THESE DRAWINGS ARE APPROVED BY THE APPROPRIATE REVIEWING AGENCIES, JR ENGINEERING APPROVES THEIR USE ONLY FOR THE PURPOSES DESIGNATED BY WRITTEN AUTHORIZATION.

PREPARED FOR
RAMPART RANGE METRO DISTRICT
8390 E CRESCENT PKWY
SUITE 300
GREENWOOD VILLAGE, CO 80111
PHONE: 303-779-5710

J·R ENGINEERING
A Westrian Company
Centennial 303-740-9393 • Colorado Springs 719-593-2593
Fort Collins 970-491-9888 • www.jrengineering.com

No.	REVISION	BY	DATE
1	1ST CoLT SUBMITTAL	KJR	3/20/25
2	2ND CoLT SUBMITTAL	KJR	8/15/25
3	3RD CoLT SUBMITTAL	KJR	11/20/25
4	4TH CoLT SUBMITTAL	KJR	3/27/26

H-SCALE	1"=50'
V-SCALE	N/A
DATE	3/27/26
DESIGNED BY	KAC
DRAWN BY	KAC
CHECKED BY	

HILLCAMP TRAIL

EXISTING CONDITIONS AND DEMOLITION PLAN

SHEET 6 OF 77

JOB NO. 15950.18

C:\Users\CrumpK.JRENGINEERING\DC\ACCDocs\JR Engineering\15950.12\Project Files\15950.18 Cabela Drive\Drawings\Sheet Drawings\15950.18 Cabela Drive Col.T\15950.18 DM01.dwg, DM02, 9/8/2026 2:50:11 PM, crumpk

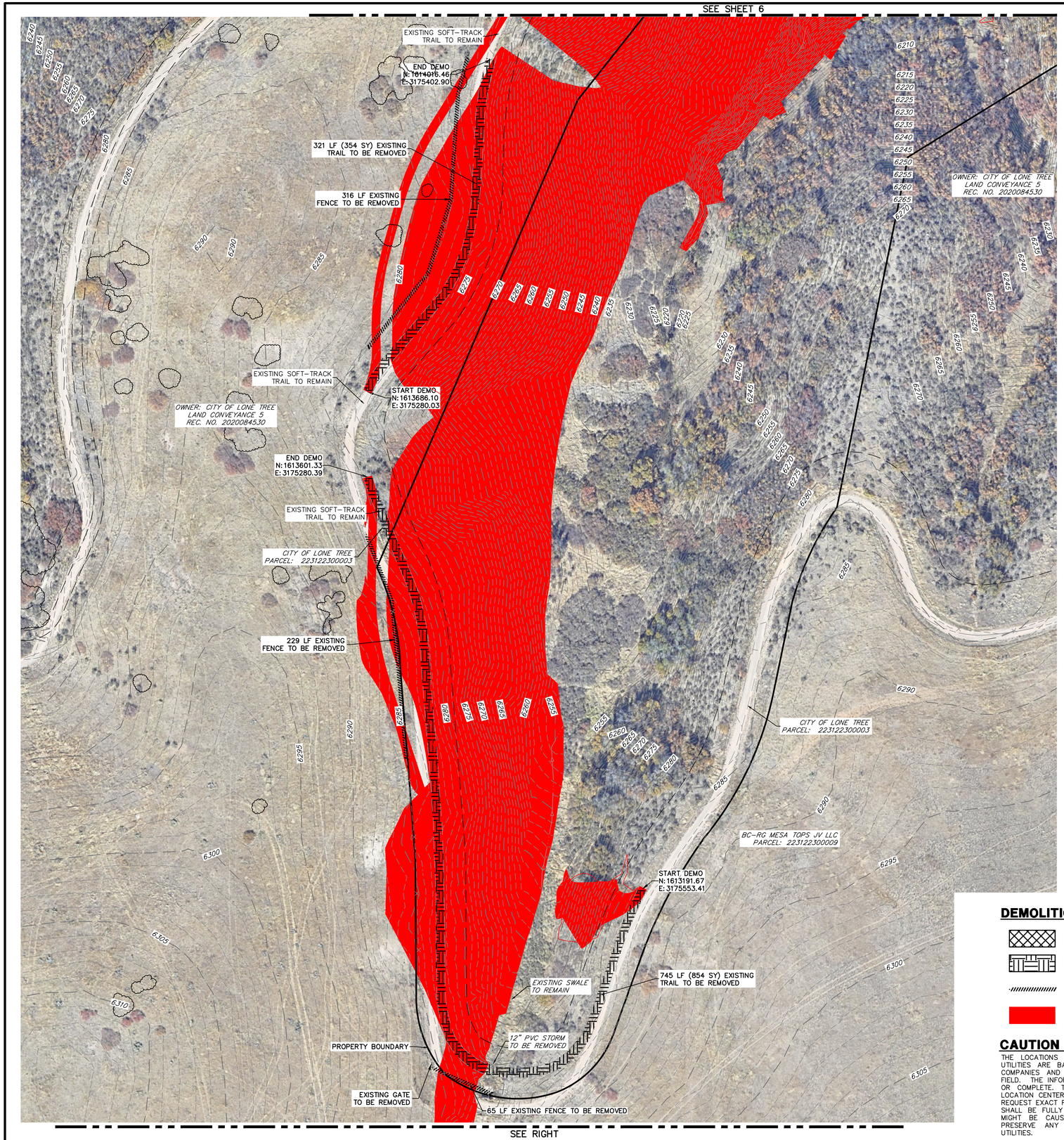

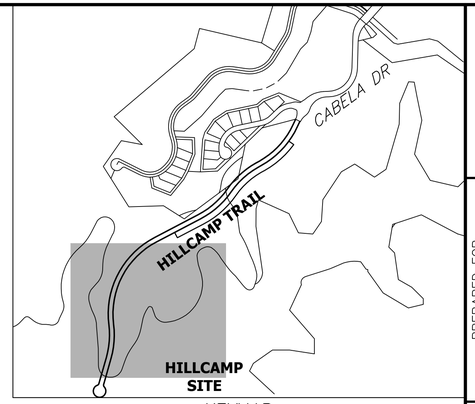

KEYMAP
SCALE: 1" = 600'

DEMOLITION NOTES:

1. NOT ALL REMOVALS WARRANTED FOR SITE CONSTRUCTION MAY BE SHOWN ON THIS PLAN. IT IS THE CONTRACTOR'S RESPONSIBILITY TO IDENTIFY ALL REMOVALS AND/OR RELOCATIONS REQUIRED FOR THE PROJECT CONSTRUCTION. ALL QUESTIONS REGARDING DEMOLITION SHALL BE SUBMITTED TO THE OWNER IN WRITING PRIOR TO BID.
2. ALL DEMOLITION, REMOVAL, DISPOSAL AND ABANDONMENT OF UTILITIES, STRUCTURES, SITE IMPROVEMENTS, AND SITE FURNISHINGS SHALL BE IN ACCORDANCE WITH ALL LOCAL, STATE, AND FEDERAL REQUIREMENTS.
3. ALL EXISTING LANDSCAPING AND IRRIGATION SYSTEMS WITHIN THE PROJECT LIMITS SHALL BE RESET AND REPAIRED TO EXISTING CONDITIONS OR BETTER.
4. CONTRACTOR SHALL VERIFY ALL UTILITY MAIN AND LATERAL LOCATIONS AND EXISTING SITE CONDITIONS PRIOR TO PROCEEDING WITH DEMOLITION. ANY SITE CONDITIONS THAT ARE NOT AS SHOWN ON THE DEMOLITION PLAN SHALL BE REPORTED TO THE OWNER PRIOR TO BID.
5. CONTRACTOR SHALL REMOVE OR RELOCATE EXISTING UTILITIES PER UTILITY COMPANY REQUIREMENTS. CONTRACTOR SHALL COORDINATE ANY REQUIRED REMOVALS, DISCONNECTIONS, AND/OR RELOCATIONS WITH THE APPROPRIATE UTILITY COMPANY PRIOR TO DEMOLITION.
6. CONTRACTOR SHALL PROVIDE ALL NECESSARY TRAFFIC CONTROL (SIGNS, BARRICADES, FLAGMEN, LIGHTS, ETC.) IN ACCORDANCE WITH THE MUTCD, CURRENT EDITION AND THE GOVERNING JURISDICTION'S STANDARDS AND SPECIFICATIONS AS REQUIRED FOR THE WORK.
7. CONTRACTOR SHALL DISPOSE OF AND TRANSPORT DEBRIS TO AREA(S) OBTAINED BY CONTRACTOR. CONTRACTOR SHALL NOT STORE OR BURN MATERIALS ON SITE. CONTRACTOR SHALL HANDLE AND DISPOSE OF ALL DEBRIS IN ACCORDANCE WITH ALL LOCAL STATE AND FEDERAL REGULATIONS. DISPOSAL SHALL BE TRANSPORTED TO AN APPROVED LANDFILL OR OTHER APPROVED FACILITY.
8. CONTRACTOR SHALL OBTAIN ALL PERMITS AND LICENSES REQUIRED FOR DEMOLITION OF WORK SHOWN.
9. CONTRACTOR SHALL PROTECT ALL SURVEY MONUMENTATION AND BENCHMARK(S). CONTRACTOR SHALL HAVE A LICENSED SURVEYOR REPLACE ANY DAMAGED OR DISTURBED MONUMENTATION AT THE CONTRACTOR'S COST.
10. CONTRACTOR SHALL PROTECT ALL EXISTING STRUCTURES, FEATURES, IMPROVEMENTS, AND UTILITIES (OVERHEAD OR UNDERGROUND) AT ALL TIMES DURING DEMOLITION AND CONSTRUCTION. CONTRACTOR WILL BE RESPONSIBLE FOR ALL RESULTANT COSTS DUE TO SUCH DAMAGES.
11. EXISTING SOFT TRACK TRAIL TO BE RELOCATED IN ADVANCE OF ROADWAY GRADING ADJACENT TO THE TRAIL

SEE LEFT

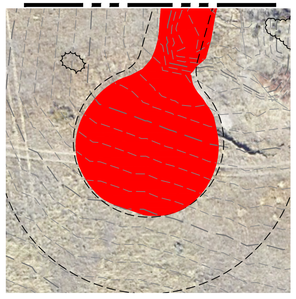

DEMOLITION LEGEND

- ASPHALT REMOVAL
- TRAIL REMOVAL
- CURB & GUTTER REMOVAL
- GRADING DISTURBANCE & LIMITS OF VEGETATION REMOVAL

CAUTION - NOTICE TO CONTRACTOR

THE LOCATIONS OF EXISTING ABOVE GROUND AND UNDERGROUND UTILITIES ARE BASED ON THE RECORDS OF THE VARIOUS UTILITY COMPANIES AND WHERE POSSIBLE, MEASUREMENTS TAKEN IN THE FIELD. THE INFORMATION IS NOT TO BE RELIED ON AS BEING EXACT OR COMPLETE. THE CONTRACTOR MUST CALL THE LOCAL UTILITY LOCATION CENTER AT LEAST 48 HOURS BEFORE ANY EXCAVATION TO REQUEST EXACT FIELD LOCATION OF THE UTILITIES. THE CONTRACTOR SHALL BE FULLY RESPONSIBLE FOR ANY AND ALL DAMAGES WHICH MIGHT BE CAUSED BY HIS FAILURE TO EXACTLY LOCATE AND PRESERVE ANY AND ALL ABOVE GROUND AND UNDERGROUND UTILITIES.

N

50 25 0 50 100
ORIGINAL SCALE: 1" = 50'

811 Know what's below. Call before you dig.

CITY OF LONE TREE

DATE

THESE CONSTRUCTION PLANS HAVE BEEN REVIEWED BY THE CITY OF LONE TREE FOR STREET AND DRAINAGE, SIGNAGE AND STRIPING IMPROVEMENTS ONLY.

ENGINEERING DIVISION ACCEPTANCE BLOCK

ENGINEER'S STATEMENT

PREPARED UNDER MY SUPERVISION

KEVIN J. ROHRBOUGH, PE
COLORADO P.E. 48992
FOR AND ON BEHALF OF JR ENGINEERING, LLC

DATE

COLORADO REGISTERED PROFESSIONAL ENGINEER KEVIN J. ROHRBOUGH 48992 9/4/26

UNTIL SUCH TIME AS THESE DRAWINGS ARE APPROVED BY THE APPROPRIATE REVIEWING AGENCIES, JR ENGINEERING APPROVES THEIR USE ONLY FOR THE PURPOSES DESIGNATED BY WRITTEN AUTHORIZATION.

PREPARED FOR
RAMPART RANGE METRO DISTRICT
8390 E CRESCENT PKWY
SUITE 300
GREENWOOD VILLAGE, CO 80111
PHONE: 303-779-5710

J·R ENGINEERING
A Westrian Company
Centennial 303-740-9393 • Colorado Springs 719-593-2593
Fort Collins 970-491-9888 • www.jrengineering.com

No.	REVISION	BY	DATE
1	1ST CoLT SUBMITTAL	KJR	3/20/25
2	2ND CoLT SUBMITTAL	KJR	8/15/25
3	3RD CoLT SUBMITTAL	KJR	11/20/25
4	4TH CoLT SUBMITTAL	KJR	3/27/26

H-SCALE	1"=50'
V-SCALE	N/A
DATE	3/27/26
DESIGNED BY	KAC
DRAWN BY	KAC
CHECKED BY	

HILLCAMP TRAIL

EXISTING CONDITIONS AND DEMOLITION PLAN

SHEET 7 OF 77

JOB NO. 15950.18

C:\Users\Crumpk\JRENGINEERING\DC\ACCDocs\JR Engineering\15950\12\Project Files\15950\18 Cabela Drive\Drawings\Sheet Drawings\15950\18 Cabela Drive CoLT\15950\18 DM01.dwg, DM03, 9/8/2026 2:49:36 PM, crumpk

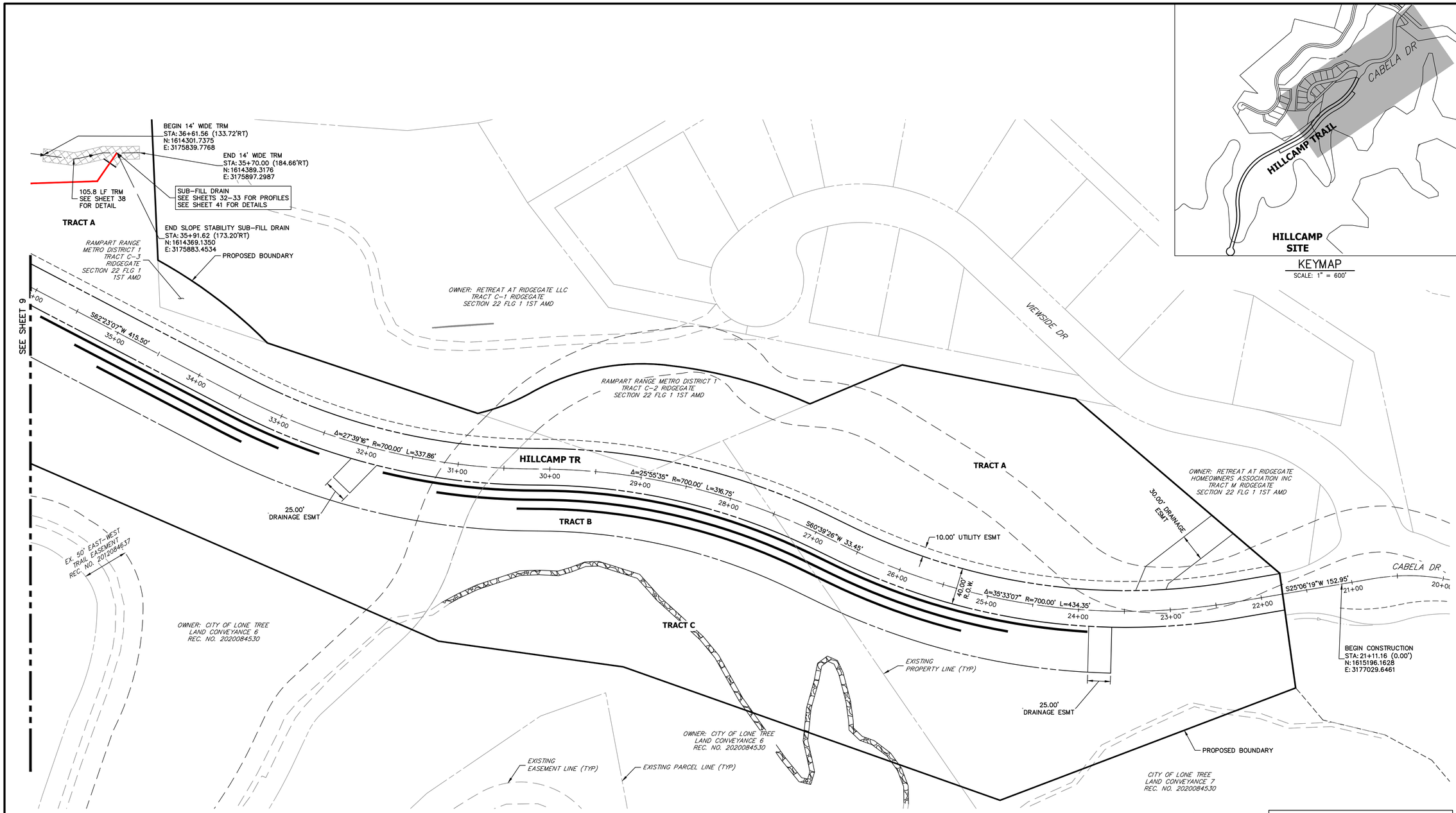

KEYMAP
SCALE: 1" = 600'

CITY OF LONE TREE

DATE

THESE CONSTRUCTION PLANS HAVE BEEN REVIEWED BY THE CITY OF LONE TREE FOR STREET AND DRAINAGE, SIGNAGE AND STRIPING IMPROVEMENTS ONLY.

ENGINEERING DIVISION ACCEPTANCE BLOCK

811
Know what's **below.**
Call before you dig.

ENGINEER'S STATEMENT

PREPARED UNDER MY SUPERVISION

KEVIN J. ROHRBOUGH
48992
9/4/26

KEVIN ROHRBOUGH, PE — DATE
COLORADO P.E. 48992
FOR AND ON BEHALF OF JR ENGINEERING, LLC

UNTIL SUCH TIME AS THESE DRAWINGS ARE APPROVED BY THE APPROPRIATE REVIEWING AGENCIES, JR ENGINEERING APPROVES THEIR USE ONLY FOR THE PURPOSES DESIGNATED BY WRITTEN AUTHORIZATION.

PREPARED FOR
RAMPART RANGE METRO DISTRICT
2001 16TH STREET
SUITE 1700
DENVER, CO 80202
PHONE: 303-779-5710

J·R ENGINEERING
A Westrian Company
Centennial 303-740-9393 • Colorado Springs 719-593-2593
Fort Collins 970-491-9888 • www.jrengineering.com

No.	REVISION	BY	DATE
0	FOR APPROVAL	KJR	9/2/26

H-SCALE	1"=50'
V-SCALE	N/A
DATE	9/4/26
DESIGNED BY	KAC
DRAWN BY	KAC
CHECKED BY	

HILLCAMP TRAIL

HORIZONTAL CONTROL PLAN

SHEET 8 OF 80

JOB NO. 15950.18

C:\Users\CrumpK.JRENGINEERING\DC\ACCDocs\JR Engineering\15950129\Project Files\15950 18 Cabela Drive\Drawings\Sheet Drawings\15950 18 Cabela Drive Col.T\15950 18 HC01.dwg, HC01, 9/8/2026 2:50:49 PM, crumpk

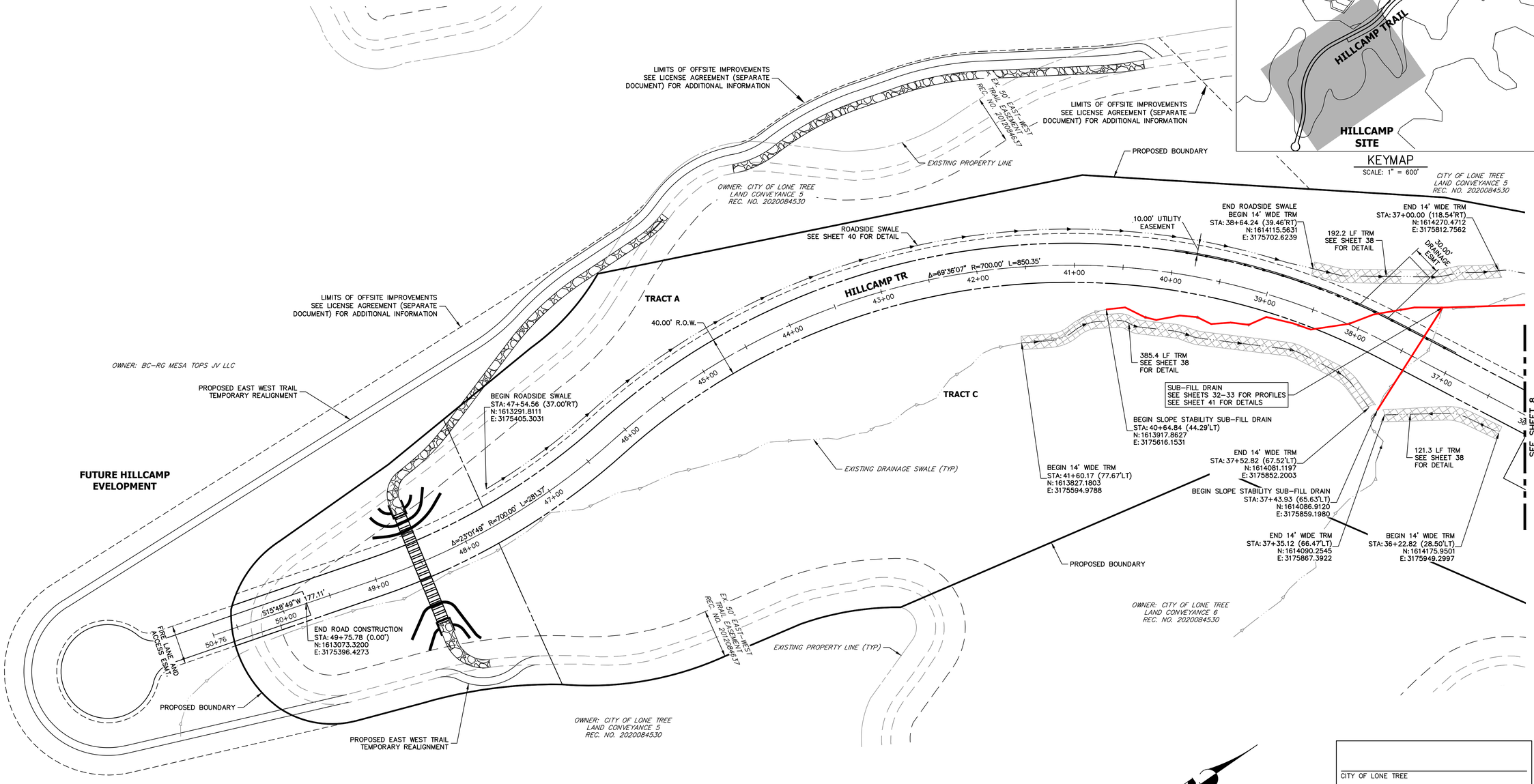

Know what's below. Call before you dig.

CITY OF LONE TREE

DATE

THESE CONSTRUCTION PLANS HAVE BEEN REVIEWED BY THE CITY OF LONE TREE FOR STREET AND DRAINAGE, SIGNAGE AND STRIPING IMPROVEMENTS ONLY.

ENGINEERING DIVISION ACCEPTANCE BLOCK

ENGINEER'S STATEMENT

PREPARED UNDER MY SUPERVISION

KEVIN ROHRBOUGH, PE
COLORADO P.E. 48992
FOR AND ON BEHALF OF JR ENGINEERING, LLC

DATE

COLORADO REGISTERED PROFESSIONAL ENGINEER KEVIN J. ROHRBOUGH 48992 9/4/26

UNTIL SUCH TIME AS THESE DRAWINGS ARE APPROVED BY THE APPROPRIATE REVIEWING AGENCIES, JR ENGINEERING APPROVES THEIR USE ONLY FOR THE PURPOSES DESIGNATED BY WRITTEN AUTHORIZATION.

PREPARED FOR
RAMPART RANGE METRO DISTRICT
2001 16TH STREET
SUITE 1700
DENVER, CO 80202
PHONE: 303-779-5710

J·R ENGINEERING
A Westrian Company
Centennial 303-740-9393 • Colorado Springs 719-593-2593
Fort Collins 970-491-9888 • www.jrengineering.com

No.	REVISION	BY	DATE
0	FOR APPROVAL	KJR	9/2/26

H-SCALE	1"=50'
V-SCALE	N/A
DATE	9/4/26
DESIGNED BY	KAC
DRAWN BY	KAC
CHECKED BY	

HILLCAMP TRAIL

HORIZONTAL CONTROL PLAN

SHEET 9 OF 80

JOB NO. 15950.18

C:\Users\CrumpK.JRENGINEERING\DC\ACCDocs\JR Engineering\15950129\Project Files\15950-18 Cabela Drive\Drawings\Sheet Drawings\15950-18 Cabela Drive CoLT\15950-18 HC01.dwg, HC02, 9/8/2026 2:46:32 PM, crumpk

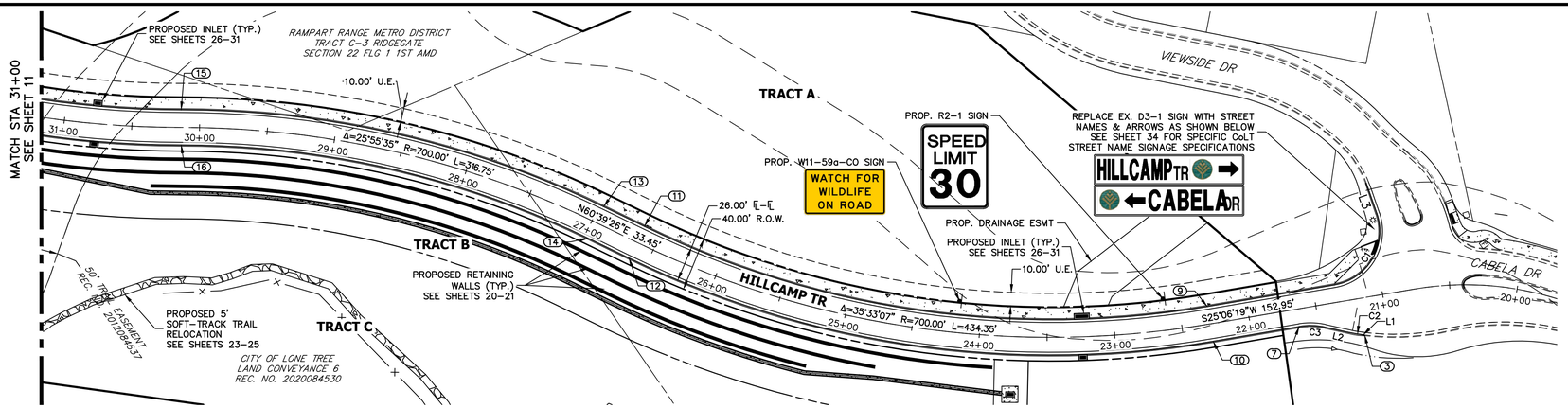

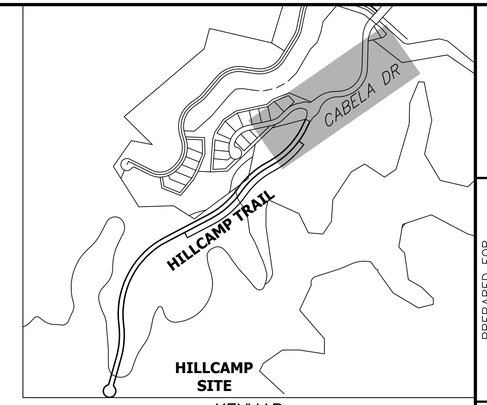

KEYMAP
SCALE: 1" = 600'

HILLCAMP TRAIL PROFILE
STA 21+00.00 TO 31+00.00

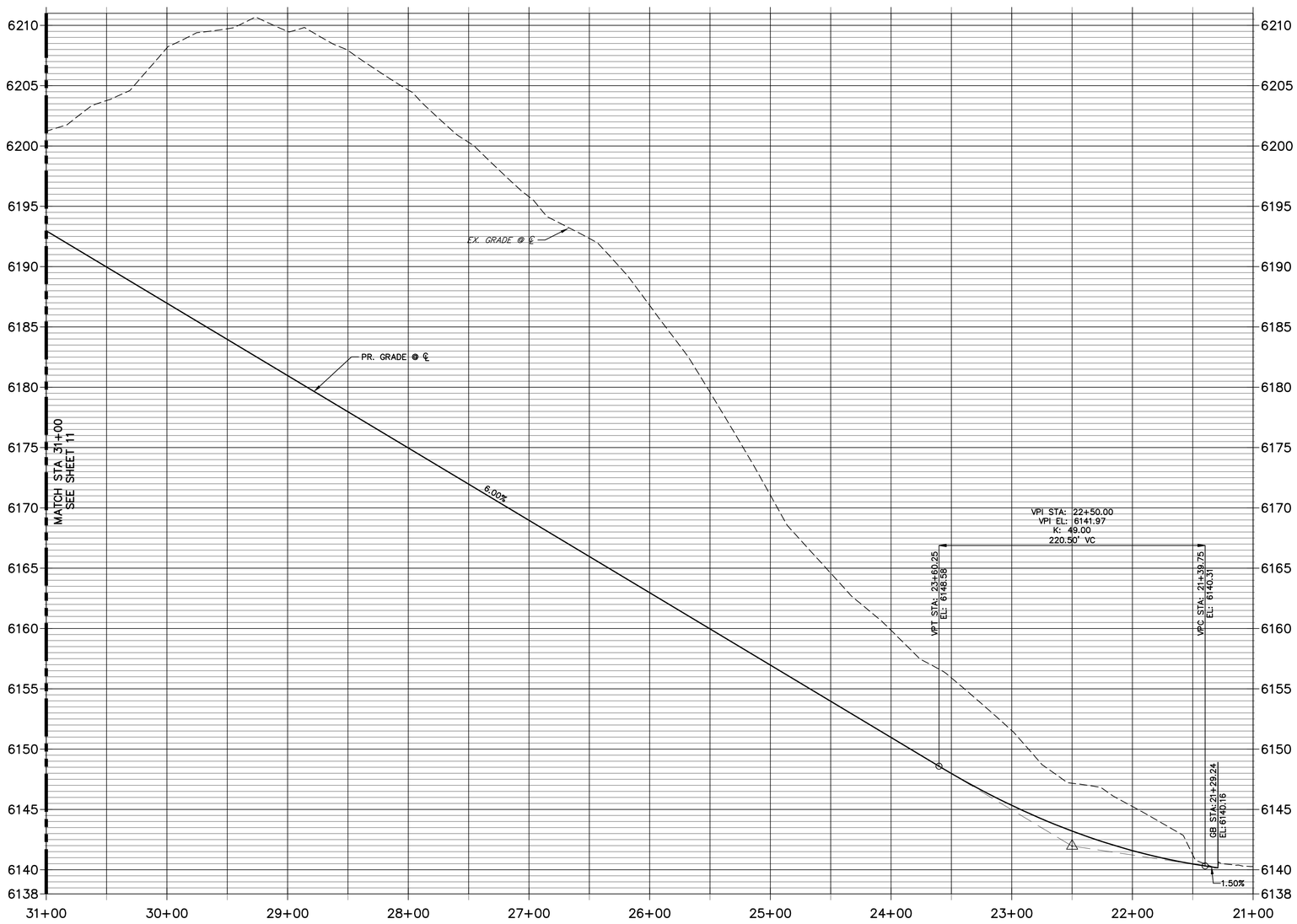

CURVE TABLE			
CURVE	DELTA	RADIUS	LENGTH
C1	99°15'28"	40.03'	69.35'
C2	5°45'39"	91.29'	9.18'
C3	22°07'02"	50.00'	19.30'

LINE TABLE		
LINE	BEARING	DISTANCE
L1	N42°02'00"E	2.18'
L2	S47°13'21"W	18.49'

POINT TABLULATION					
POINT NUMBER	STATION	OFFSET	ALIGNMENT	ELEVATION	DESCRIPTION
1	20+98.05	83.22' (RT)	HILLCAMP DRIVE	6138.47	MATCH EX C&G
2	20+94.14	59.51' (RT)	HILLCAMP DRIVE	6138.59	PC
3	21+18.00	27.30' (LT)	HILLCAMP DRIVE	6139.66	MATCH EX C&G
4	21+20.09	26.66' (LT)	HILLCAMP DRIVE	6139.68	PC
5	21+28.75	23.64' (LT)	HILLCAMP DRIVE	6139.78	PT
6	21+45.88	16.68' (LT)	HILLCAMP DRIVE	6140.10	PC
7	21+64.70	13.00' (LT)	HILLCAMP DRIVE	6140.36	PT
8	21+33.60	13.00' (RT)	HILLCAMP DRIVE	6139.83	PT
9	22+29.05	13.00' (RT)	HILLCAMP DRIVE	6142.08	PC
10	22+29.05	13.00' (LT)	HILLCAMP DRIVE	6142.08	PC
11	26+63.39	13.00' (RT)	HILLCAMP DRIVE	6166.38	PT
12	26+63.39	13.00' (LT)	HILLCAMP DRIVE	6166.38	PT
13	26+96.84	13.00' (RT)	HILLCAMP DRIVE	6168.39	PC
14	26+96.84	13.00' (LT)	HILLCAMP DRIVE	6168.39	PC
15	30+13.59	13.00' (RT)	HILLCAMP DRIVE	6187.40	PRC
16	30+13.59	13.00' (LT)	HILLCAMP DRIVE	6187.40	PRC

ROADWAY NOTES

1. ALL PROFILE ELEVATIONS AND STATIONING ARE CENTERLINE UNLESS OTHERWISE NOTED.
2. ALL POINT TABULATIONS ARE FLOWLINE UNLESS OTHERWISE NOTED.
3. SEE COVER SHEET FOR BENCHMARK.
4. SEE SHEET 3 FOR LEGEND.
5. SEE SHEET 3 FOR TYPICAL STREET SECTION.
6. SIDEWALK SHALL BE A DEPTH OF 6 INCHES.
7. SEE SHEETS 20-21 FOR RETAINING WALL PLANS.

811 Know what's below. Call before you dig.

50 25 0 50 100
ORIGINAL SCALE: 1" = 50'

CITY OF LONE TREE

DATE

THESE CONSTRUCTION PLANS HAVE BEEN REVIEWED BY THE CITY OF LONE TREE FOR STREET AND DRAINAGE, SIGNAGE AND STRIPING IMPROVEMENTS ONLY.

ENGINEERING DIVISION ACCEPTANCE BLOCK

ENGINEER'S STATEMENT

PREPARED UNDER MY SUPERVISION

KEVIN ROHRBOUGH, PE
COLORADO P.E. 48992
FOR AND ON BEHALF OF JR ENGINEERING, LLC

DATE

COLORADO REGISTERED PROFESSIONAL ENGINEER KEVIN J. ROHRBOUGH 48992 9/4/26

UNTIL SUCH TIME AS THESE DRAWINGS ARE APPROVED BY THE APPROPRIATE REVIEWING AGENCIES, JR ENGINEERING APPROVES THEIR USE ONLY FOR THE PURPOSES DESIGNATED BY WRITTEN AUTHORIZATION.

PREPARED FOR
RAMPART RANGE METRO DISTRICT
2001 16TH STREET
SUITE 1700
DENVER, CO 80202
PHONE: 303-779-5710

J·R ENGINEERING
A Westrian Company
Centennial 303-740-9393 • Colorado Springs 719-593-2593
Fort Collins 970-491-9888 • www.jrengineering.com

No.	REVISION	BY	DATE
0	FOR APPROVAL	KJR	9/2/26

H-SCALE	1"=50'		
V-SCALE	1"=5'		
DATE	9/4/26		
DESIGNED BY	KAC		
DRAWN BY	KAC		
CHECKED BY			

HILLCAMP TRAIL
ROADWAY PLANS AND PROFILES AND SIGNAGE PLANS

SHEET 10 OF 80

JOB NO. 15950.18

C:\Users\Crumpk_JR\ENGINEERING\DC\ACCDocs\JR Engineering\15950\Project Files\15950\Cabela Drive\Drawings\Sheet Drawings\15950 Cabela Drive CoLT\15950 SI01.dwg, SI01, 9/8/2026 2:49:23 PM, crumpk

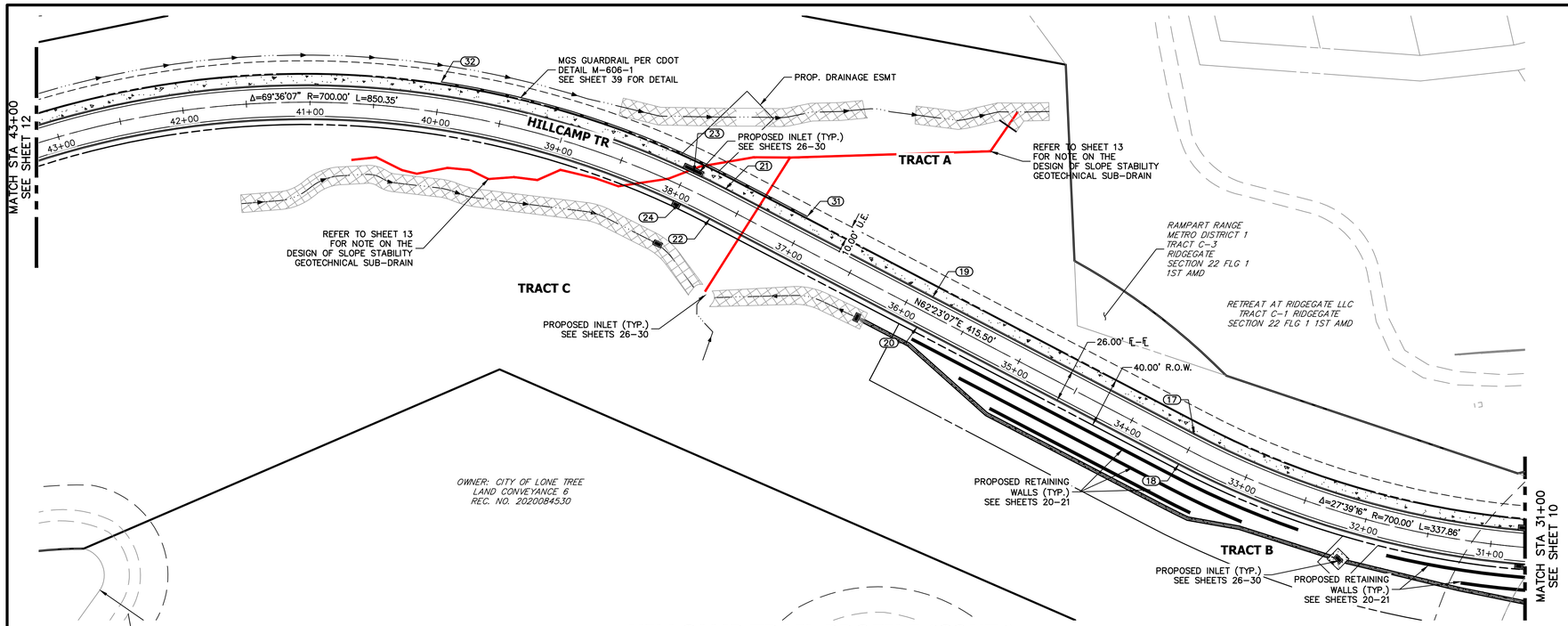

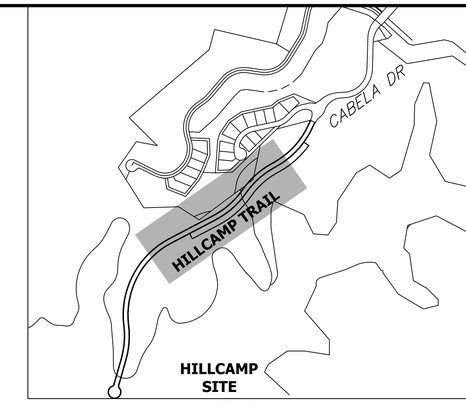

KEYMAP
SCALE: 1" = 600'

POINT TABLULATION					
POINT NUMBER	STATION	OFFSET	ALIGNMENT	ELEVATION	DESCRIPTION
17	33+51.45	13.00' (RT)	HILLCAMP DRIVE	6207.67	PT
18	33+51.45	13.00' (LT)	HILLCAMP DRIVE	6207.67	PT
19	35+83.41	13.00' (RT)	HILLCAMP DRIVE	6215.96	HIGH PT
20	35+83.41	13.00' (LT)	HILLCAMP DRIVE	6215.96	HIGH PT
21	37+66.96	13.00' (RT)	HILLCAMP DRIVE	6213.44	PC
22	37+66.96	13.00' (LT)	HILLCAMP DRIVE	6213.44	PC
23	37+94.22	13.00' (RT)	HILLCAMP DRIVE	6213.37	LOW PT
24	37+94.22	13.00' (LT)	HILLCAMP DRIVE	6213.37	LOW PT
31	37+00.00	23.83' (RT)	HILLCAMP DRIVE	6214.77	START GUARDRAIL
32	40+00.00	23.83' (RT)	HILLCAMP DRIVE	6218.44	END GUARDRAIL

HILLCAMP TRAIL PROFILE (CONT.)
STA 31+00.00 TO 43+00.00

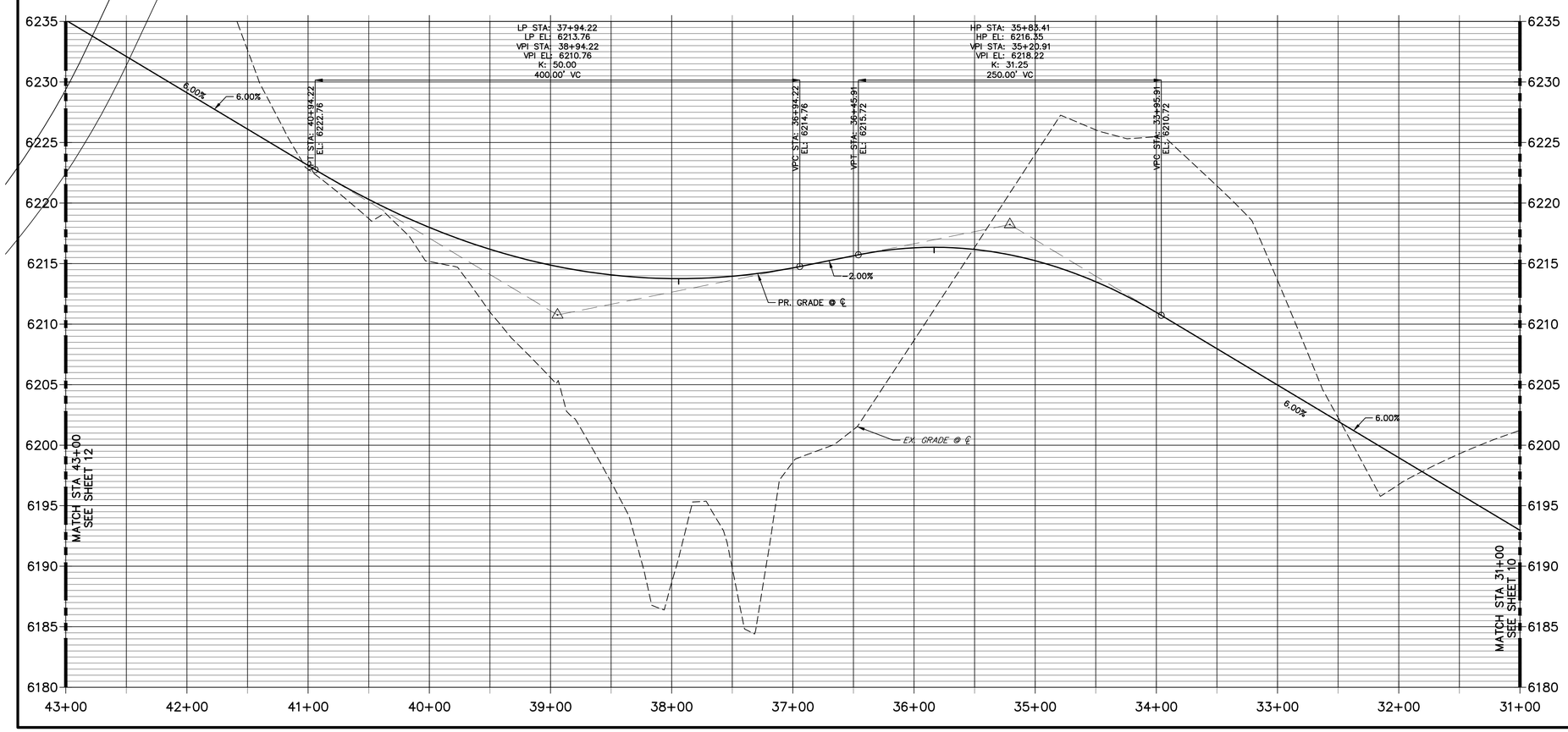

ROADWAY NOTES

1. ALL PROFILE ELEVATIONS AND STATIONING ARE CENTERLINE UNLESS OTHERWISE NOTED.
2. ALL POINT TABULATIONS ARE FLOWLINE UNLESS OTHERWISE NOTED.
3. SEE COVER SHEET FOR BENCHMARK.
4. SEE SHEET 3 FOR LEGEND.
5. SEE SHEET 3 FOR TYPICAL STREET SECTION.
6. SIDEWALK SHALL BE A DEPTH OF 6 INCHES.
7. SEE SHEETS 20-21 FOR RETAINING WALL PLANS.

50 25 0 50 100
ORIGINAL SCALE: 1" = 50'

811 Know what's below. Call before you dig.

CITY OF LONE TREE

DATE

THESE CONSTRUCTION PLANS HAVE BEEN REVIEWED BY THE CITY OF LONE TREE FOR STREET AND DRAINAGE, SIGNAGE AND STRIPING IMPROVEMENTS ONLY.

ENGINEERING DIVISION ACCEPTANCE BLOCK

ENGINEER'S STATEMENT

PREPARED UNDER MY SUPERVISION

COLORADO REGISTERED KEVIN J. ROHRBOUGH 48992 9/4/26 PROFESSIONAL ENGINEER

KEVIN ROHRBOUGH, PE — DATE
COLORADO P.E. 48992
FOR AND ON BEHALF OF JR ENGINEERING, LLC

UNTIL SUCH TIME AS THESE DRAWINGS ARE APPROVED BY THE APPROPRIATE REVIEWING AGENCIES, JR ENGINEERING APPROVES THEIR USE ONLY FOR THE PURPOSES DESIGNATED BY WRITTEN AUTHORIZATION.

PREPARED FOR
RAMPART RANGE METRO DISTRICT
2001 16TH STREET
SUITE 1700
DENVER, CO 80202
PHONE: 303-779-5710

J·R ENGINEERING
A Westrian Company
Centennial 303-740-9393 • Colorado Springs 719-593-2593
Fort Collins 970-491-9888 • www.jrengineering.com

No.	REVISION	BY	DATE
0	FOR APPROVAL	KJR	9/2/26

H-SCALE	1"=50'
V-SCALE	1"=5'
DATE	9/4/26
DESIGNED BY	KAC
DRAWN BY	KAC
CHECKED BY	

HILLCAMP TRAIL
ROADWAY PLANS AND PROFILES AND SIGNAGE PLANS

SHEET 11 OF 80
JOB NO. 15950.18

C:\Users\CrumpK.JRENGINEERING\DC\ACCDocs\JR Engineering\15950\12\Project Files\15950\18 Cabela Drive\Drawings\Sheet Drawings\15950\18 Cabela Drive CoLT\15950\18 SI01.dwg, SI02, 9/8/2026 2:47:10 PM, crumpk

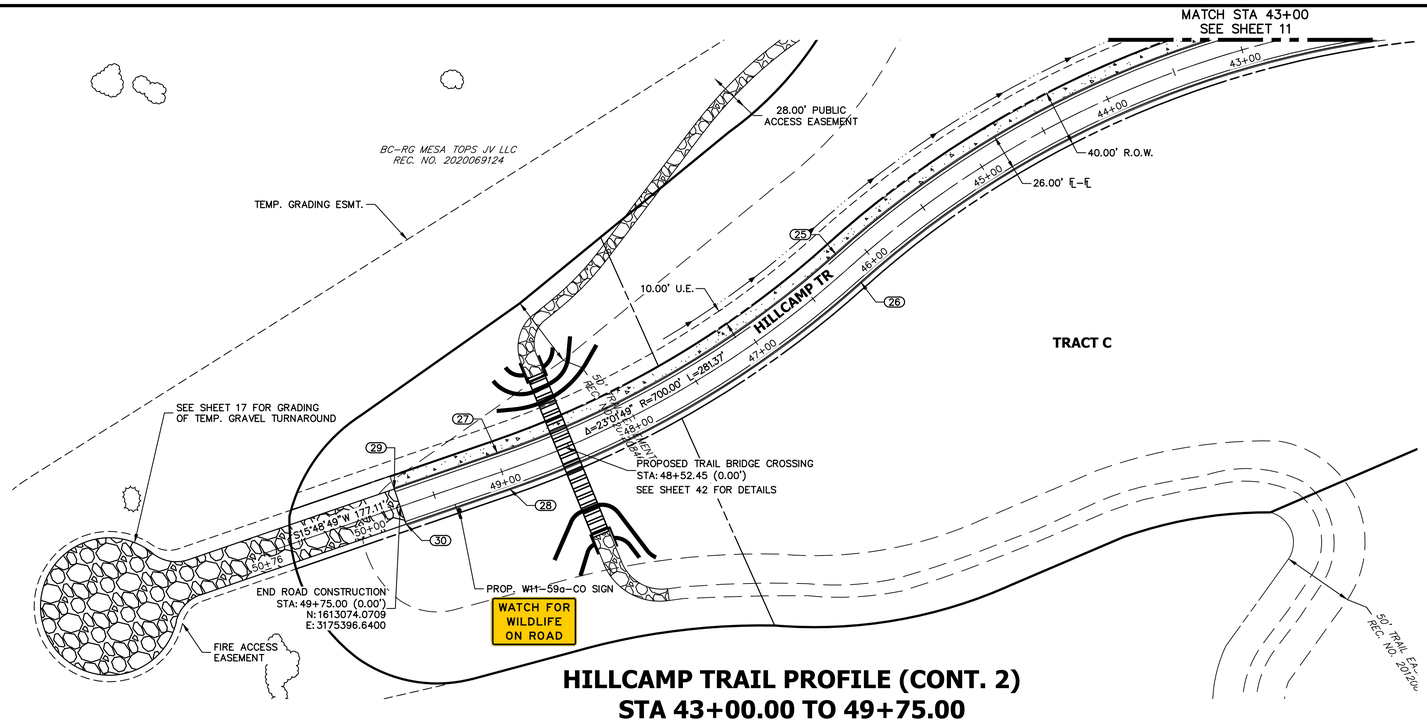

HILLCAMP TRAIL PROFILE (CONT. 2)
STA 43+00.00 TO 49+75.00

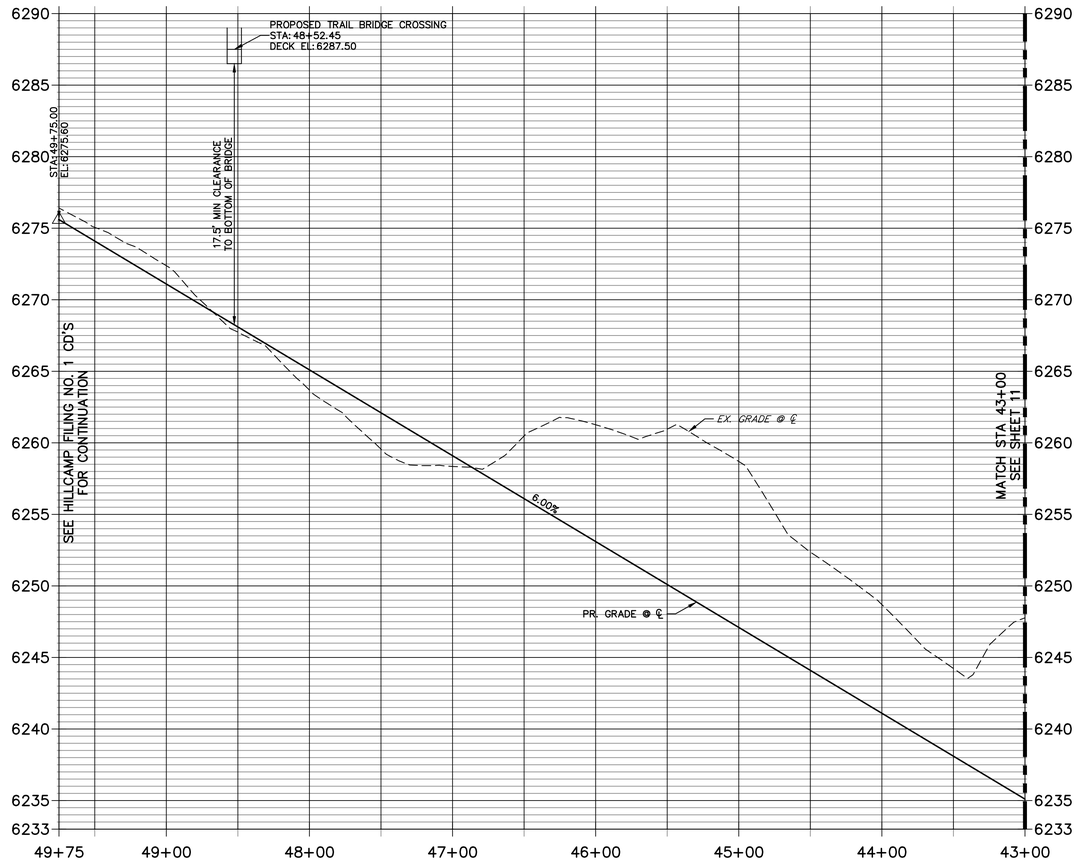

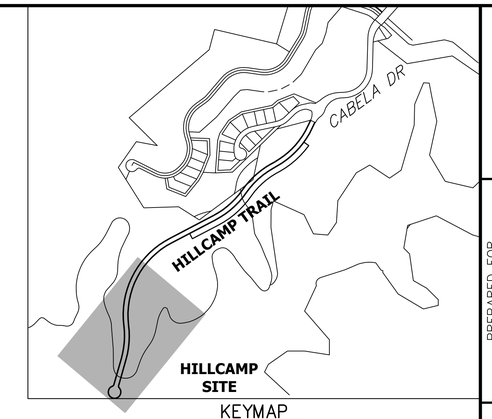

KEYMAP
SCALE: 1" = 600'

POINT TABLULATION					
POINT NUMBER	STATION	OFFSET	ALIGNMENT	ELEVATION	DESCRIPTION
25	46+17.30	13.00' (RT)	HILLCAMP DRIVE	6253.75	PRC
26	46+17.30	13.00' (LT)	HILLCAMP DRIVE	6253.75	PRC
27	48+98.67	13.00' (RT)	HILLCAMP DRIVE	6270.64	PT
28	48+98.67	13.00' (LT)	HILLCAMP DRIVE	6270.64	PT
29	49+75.00	13.00' (RT)	HILLCAMP DRIVE	6275.22	END C&G
30	49+75.00	13.00' (LT)	HILLCAMP DRIVE	6275.22	END C&G

ROADWAY NOTES

1. ALL PROFILE ELEVATIONS AND STATIONING ARE CENTERLINE UNLESS OTHERWISE NOTED.
2. ALL POINT TABULATIONS ARE FLOWLINE UNLESS OTHERWISE NOTED.
3. SEE COVER SHEET FOR BENCHMARK.
4. SEE SHEET 3 FOR LEGEND.
5. SEE SHEET 3 FOR TYPICAL STREET SECTION.
6. SIDEWALK SHALL BE A DEPTH OF 6 INCHES.
7. SEE SHEETS 20-21 FOR RETAINING WALL PLANS.

50 25 0 50 100
ORIGINAL SCALE: 1" = 50'

Know what's **below.** **Call** before you dig.

CITY OF LONE TREE

DATE

THESE CONSTRUCTION PLANS HAVE BEEN REVIEWED BY THE CITY OF LONE TREE FOR STREET AND DRAINAGE, SIGNAGE AND STRIPING IMPROVEMENTS ONLY.

ENGINEERING DIVISION ACCEPTANCE BLOCK

ENGINEER'S STATEMENT

PREPARED UNDER MY SUPERVISION

COLORADO REGISTERED KEVIN J. ROHRBOUGH 48992 9/4/26 PROFESSIONAL ENGINEER

KEVIN ROHRBOUGH, PE
COLORADO P.E. 48992
FOR AND ON BEHALF OF JR ENGINEERING, LLC

DATE

UNTIL SUCH TIME AS THESE DRAWINGS ARE APPROVED BY THE APPROPRIATE REVIEWING AGENCIES, JR ENGINEERING APPROVES THEIR USE ONLY FOR THE PURPOSES DESIGNATED BY WRITTEN AUTHORIZATION.

PREPARED FOR
RAMPART RANGE METRO DISTRICT
2001 16TH STREET
SUITE 1700
DENVER, CO 80202
PHONE: 303-779-5710

J·R ENGINEERING
A Westrian Company
Centennial 303-740-9393 • Colorado Springs 719-593-2593
Fort Collins 970-491-9888 • www.jrengineering.com

No.	REVISION	BY	DATE
0	FOR APPROVAL	KJR	9/2/26

H-SCALE	1"=50'
V-SCALE	1"=5'
DATE	9/4/26
DESIGNED BY	KAC
DRAWN BY	KAC
CHECKED BY	

HILLCAMP TRAIL

ROADWAY PLANS AND PROFILES AND SIGNAGE PLANS

SHEET 12 OF 80

JOB NO. 15950.18

C:\Users\CrumpK.JRENGINEERING\DC\ACCDocs\JR Engineering\15950122\Project Files\15950018 Cabela Drive\Drawings\Sheet Drawings\15950018 Cabela Drive Col.T\15950018 3d01.dwg, SI03, 9/8/2026 2:49:58 PM, crumpk

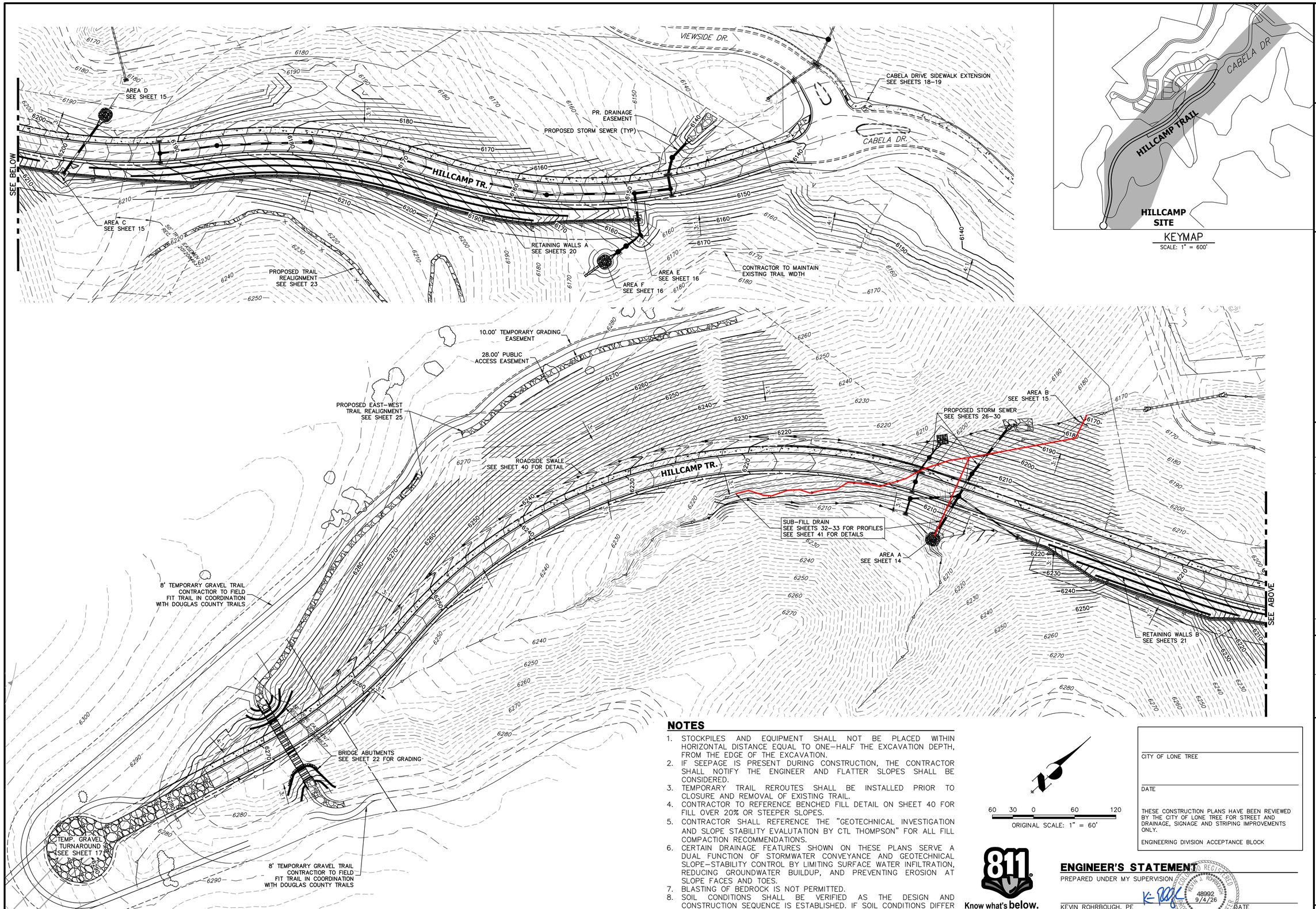

KEYMAP
SCALE: 1" = 600'

NOTES

1. STOCKPILES AND EQUIPMENT SHALL NOT BE PLACED WITHIN HORIZONTAL DISTANCE EQUAL TO ONE–HALF THE EXCAVATION DEPTH, FROM THE EDGE OF THE EXCAVATION.
2. IF SEEPAGE IS PRESENT DURING CONSTRUCTION, THE CONTRACTOR SHALL NOTIFY THE ENGINEER AND FLATTER SLOPES SHALL BE CONSIDERED.
3. TEMPORARY TRAIL REROUTES SHALL BE INSTALLED PRIOR TO CLOSURE AND REMOVAL OF EXISTING TRAIL.
4. CONTRACTOR TO REFERENCE BENCHED FILL DETAIL ON SHEET 40 FOR FILL OVER 20% OR STEEPER SLOPES.
5. CONTRACTOR SHALL REFERENCE THE "GEOTECHNICAL INVESTIGATION AND SLOPE STABILITY EVALUTATION BY CTL THOMPSON" FOR ALL FILL COMPACTION RECOMMENDATIONS.
6. CERTAIN DRAINAGE FEATURES SHOWN ON THESE PLANS SERVE A DUAL FUNCTION OF STORMWATER CONVEYANCE AND GEOTECHNICAL SLOPE–STABILITY CONTROL BY LIMITING SURFACE WATER INFILTRATION, REDUCING GROUNDWATER BUILDUP, AND PREVENTING EROSION AT SLOPE FACES AND TOES.
7. BLASTING OF BEDROCK IS NOT PERMITTED.
8. SOIL CONDITIONS SHALL BE VERIFIED AS THE DESIGN AND CONSTRUCTION SEQUENCE IS ESTABLISHED. IF SOIL CONDITIONS DIFFER FROM THOSE ANALYZED IN THE GEOTECHNICAL STUDIES, THE CONTRACTOR SHALL STOP ALL GRADING ACTIVITIES AND CONSULT THE GEOTECHNICAL AND CIVIL ENGINEER IMMEDIATELY.

60 30 0 60 120
ORIGINAL SCALE: 1" = 60'

811
Know what's **below.**
Call before you dig.

CITY OF LONE TREE

DATE

THESE CONSTRUCTION PLANS HAVE BEEN REVIEWED BY THE CITY OF LONE TREE FOR STREET AND DRAINAGE, SIGNAGE AND STRIPING IMPROVEMENTS ONLY.

ENGINEERING DIVISION ACCEPTANCE BLOCK

ENGINEER'S STATEMENT

PREPARED UNDER MY SUPERVISION

KEVIN ROHRBOUGH, PE — DATE
COLORADO P.E. 48992
FOR AND ON BEHALF OF JR ENGINEERING, LLC

COLORADO REGISTERED PROFESSIONAL ENGINEER KEVIN J. ROHRBOUGH 48992 9/4/26

UNTIL SUCH TIME AS THESE DRAWINGS ARE APPROVED BY THE APPROPRIATE REVIEWING AGENCIES, JR ENGINEERING APPROVES THEIR USE ONLY FOR THE PURPOSES DESIGNATED BY WRITTEN AUTHORIZATION.

PREPARED FOR
RAMPART RANGE METRO DISTRICT
2001 16TH STREET
SUITE 1700
DENVER, CO 80202
PHONE: 303–779–5710

J·R ENGINEERING
A Westrian Company
Centennial 303–740–9393 • Colorado Springs 719–593–2593
Fort Collins 970–491–9888 • www.jrengineering.com

No.	REVISION	BY	DATE
0	FOR APPROVAL	KJR	9/2/26

H–SCALE	1"=60'
V–SCALE	N/A
DATE	9/4/26
DESIGNED BY	KAC
DRAWN BY	JJ
CHECKED BY	

HILLCAMP TRAIL

OVERALL GRADING PLAN

SHEET 13 OF 80

JOB NO. 15950.18

C:\Users\Crumpk_JR\ENGINEERING\DC\ACCDocs\JR Engineering\15950\12\Project Files\15950\18 Cabela Drive\Drawings\Sheet Drawings\15950\18 Cabela Drive CoLT\15950\18 GR01-1.dwg, Overall Grading, 9/8/2026 2:49:40 PM, crumpk

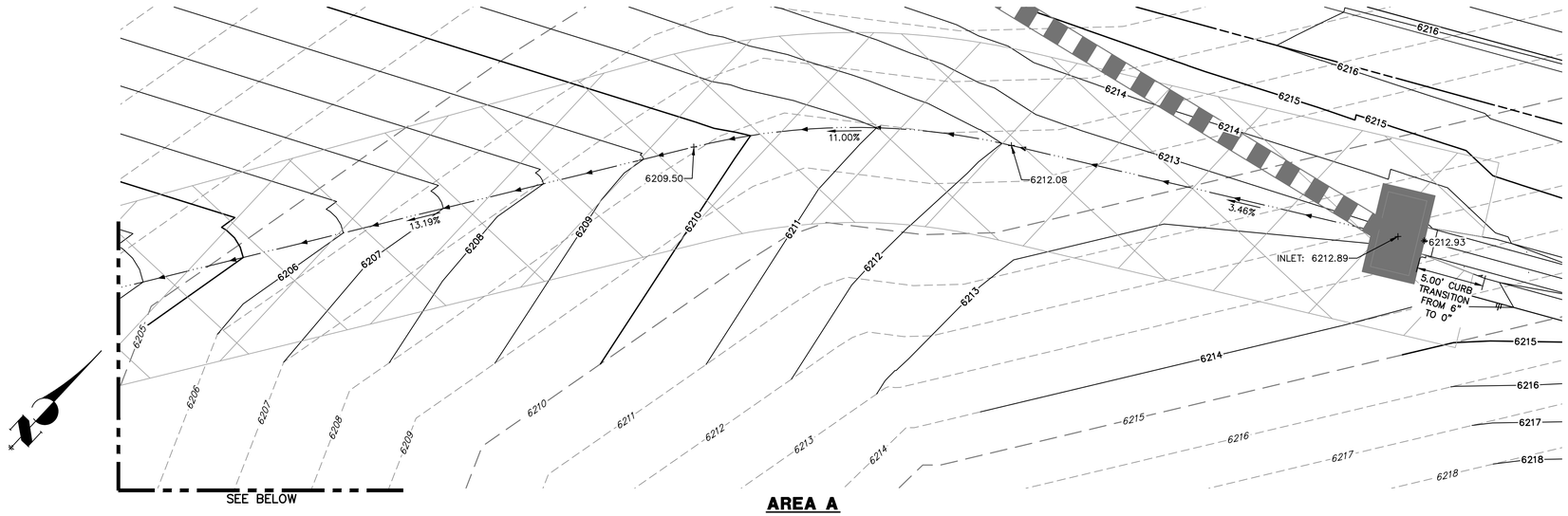

AREA A

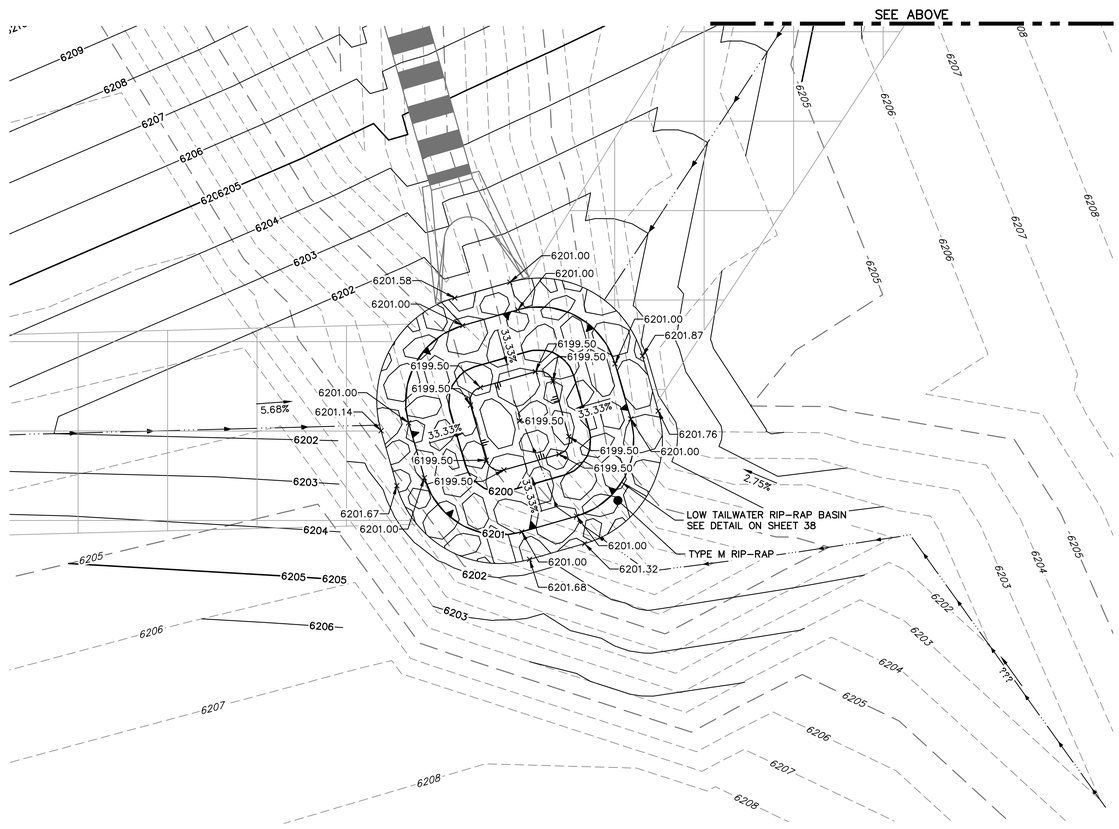

AREA A (CONTINUED)

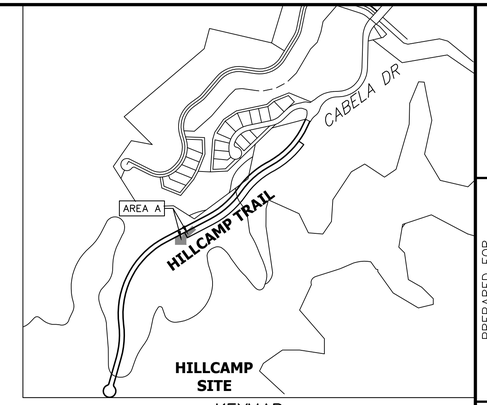

KEYMAP
SCALE: 1" = 600'

UNTIL SUCH TIME AS THESE DRAWINGS ARE APPROVED BY THE APPROPRIATE REVIEWING AGENCIES, JR ENGINEERING APPROVES THEIR USE ONLY FOR THE PURPOSES DESIGNATED BY WRITTEN AUTHORIZATION.

PREPARED FOR
RAMPART RANGE METRO DISTRICT
2001 16TH STREET
SUITE 1700
DENVER, CO 80202
PHONE: 303-779-5710

J·R ENGINEERING
A Westrian Company
Centennial 303-740-9393 • Colorado Springs 719-593-2593
Fort Collins 970-491-9888 • www.jrengineering.com

5 2.5 0 5 10
ORIGINAL SCALE: 1" = 5'

CITY OF LONE TREE

DATE

THESE CONSTRUCTION PLANS HAVE BEEN REVIEWED BY THE CITY OF LONE TREE FOR STREET AND DRAINAGE, SIGNAGE AND STRIPING IMPROVEMENTS ONLY.

ENGINEERING DIVISION ACCEPTANCE BLOCK

Know what's **below.**
Call before you dig.

ENGINEER'S STATEMENT
PREPARED UNDER MY SUPERVISION

KEVIN ROHRBOUGH, PE
COLORADO P.E. 48992
FOR AND ON BEHALF OF JR ENGINEERING, LLC

DATE

COLORADO REGISTERED KEVIN J. ROHRBOUGH 48992 9/4/26 PROFESSIONAL ENGINEER

No.	REVISION	BY	DATE
0	FOR APPROVAL	KJR	9/2/26

H-SCALE	1"=5'
V-SCALE	N/A
DATE	9/4/26
DESIGNED BY	KAC
DRAWN BY	JJ
CHECKED BY	

HILLCAMP TRAIL

DETAILED GRADING PLAN

SHEET 14 OF 80

JOB NO. 15950.18

C:\Users\CrumpK.JRENGINEERING\DC\ACCDocs\JR Engineering\15950\12\Project Files\15950\18 Cabela Drive\Drawings\Sheet Drawings\15950\18 Cabela Drive ColT\15950\18 GR01.dwg, Detailed Grading, 9/8/2026 2:49:54 PM, crumpk

AREA B

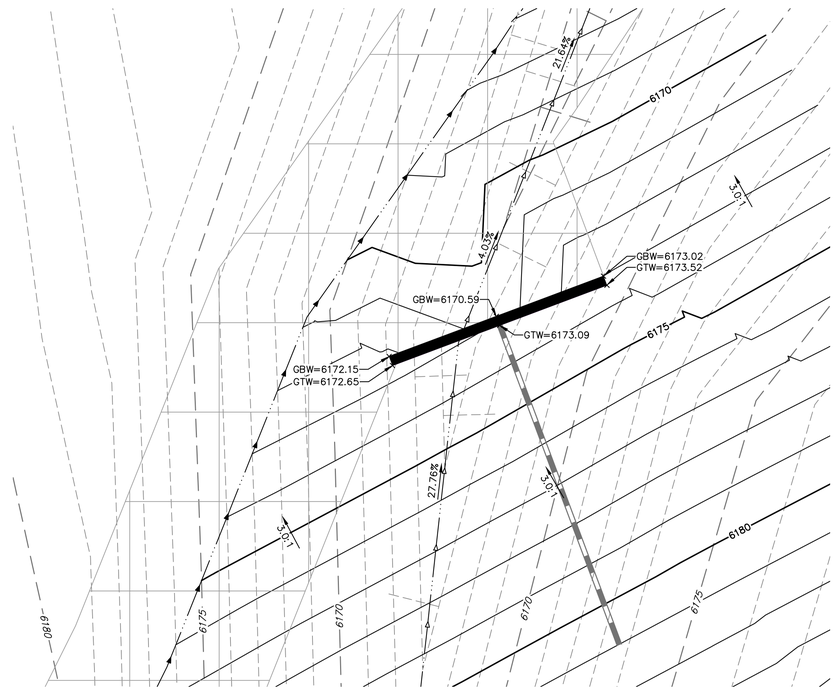

AREA C

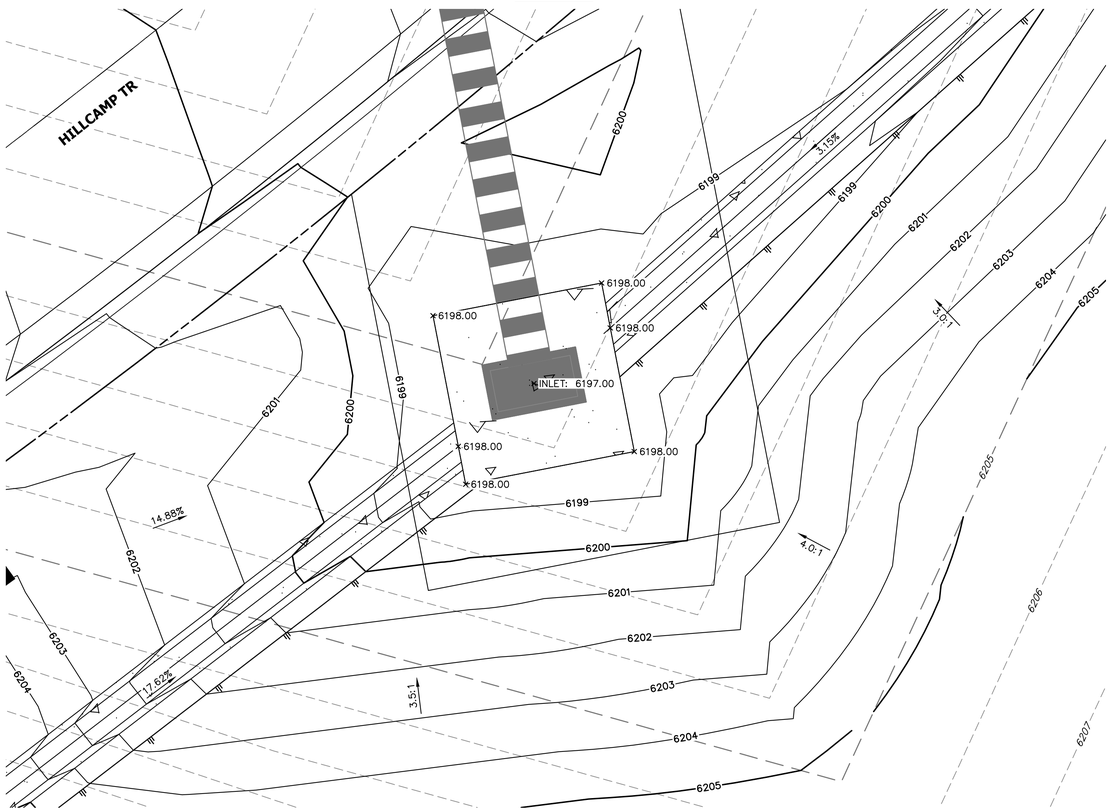

AREA D

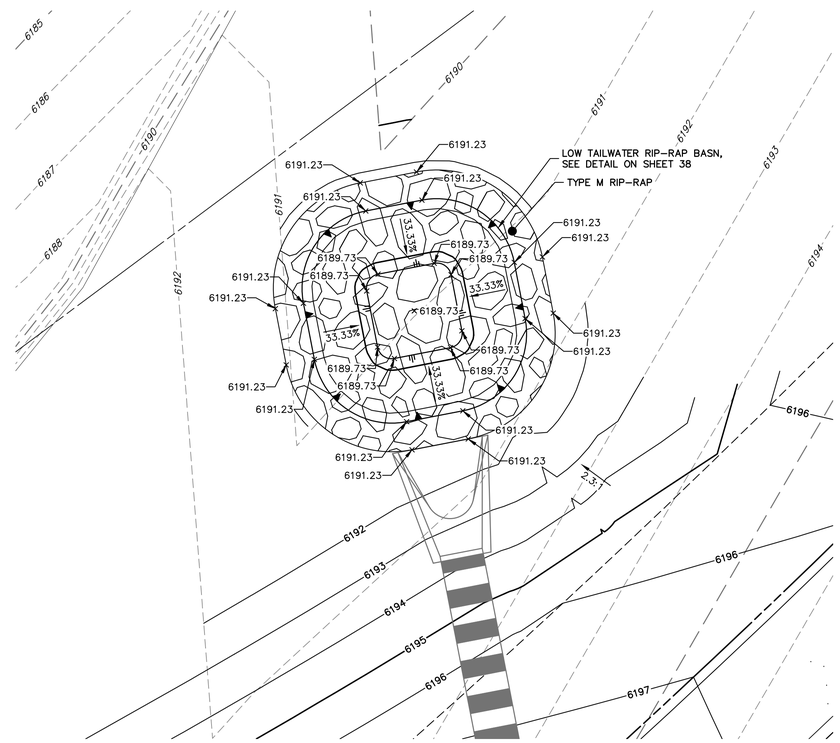

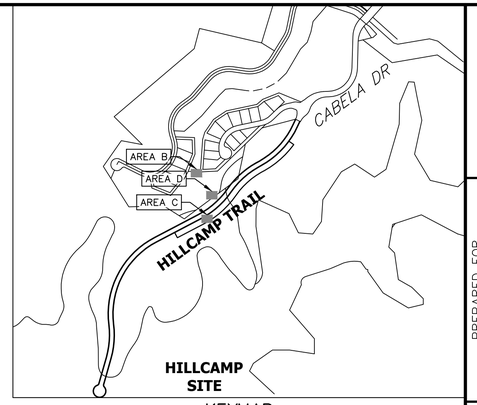

KEYMAP

SCALE: 1" = 600'

N

5 2.5 0 5 10

ORIGINAL SCALE: 1" = 5'

Know what's **below.**
Call before you dig.

CITY OF LONE TREE

DATE

THESE CONSTRUCTION PLANS HAVE BEEN REVIEWED BY THE CITY OF LONE TREE FOR STREET AND DRAINAGE, SIGNAGE AND STRIPING IMPROVEMENTS ONLY.

ENGINEERING DIVISION ACCEPTANCE BLOCK

ENGINEER'S STATEMENT

PREPARED UNDER MY SUPERVISION

KEVIN ROHRBOUGH, PE — DATE
COLORADO P.E. 48992
FOR AND ON BEHALF OF JR ENGINEERING, LLC

COLORADO REGISTERED PROFESSIONAL ENGINEER KEVIN J. ROHRBOUGH 48992 9/4/26

UNTIL SUCH TIME AS THESE DRAWINGS ARE APPROVED BY THE APPROPRIATE REVIEWING AGENCIES, JR ENGINEERING APPROVES THEIR USE ONLY FOR THE PURPOSES DESIGNATED BY WRITTEN AUTHORIZATION.

PREPARED FOR
RAMPART RANGE METRO DISTRICT
2001 16TH STREET
SUITE 1700
DENVER, CO 80202
PHONE: 303-779-5710

J·R ENGINEERING
A Westrian Company
Centennial 303-740-9393 • Colorado Springs 719-593-2593
Fort Collins 970-491-9888 • www.jrengineering.com

No.	REVISION	BY	DATE
0	FOR APPROVAL	KJR	9/2/26

H-SCALE	1"=5'
V-SCALE	N/A
DATE	9/4/26
DESIGNED BY	KAC
DRAWN BY	JJ
CHECKED BY	

HILLCAMP TRAIL

DETAILED GRADING PLAN

SHEET 15 OF 80

JOB NO. 15950.18

C:\Users\Crumpk_JR\ENGINEERING\DC\ACCDocs\JR Engineering\15950.18 Cabela Drive\Drawings\Sheet Drawings\15950.18 Cabela Drive CoLT\15950.18 GR01.dwg, Detailed Grading 2, 9/8/2026 2:48:12 PM, crumpk

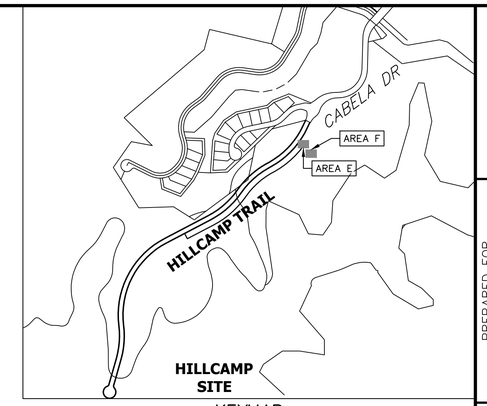

KEYMAP
SCALE: 1" = 600'

AREA F

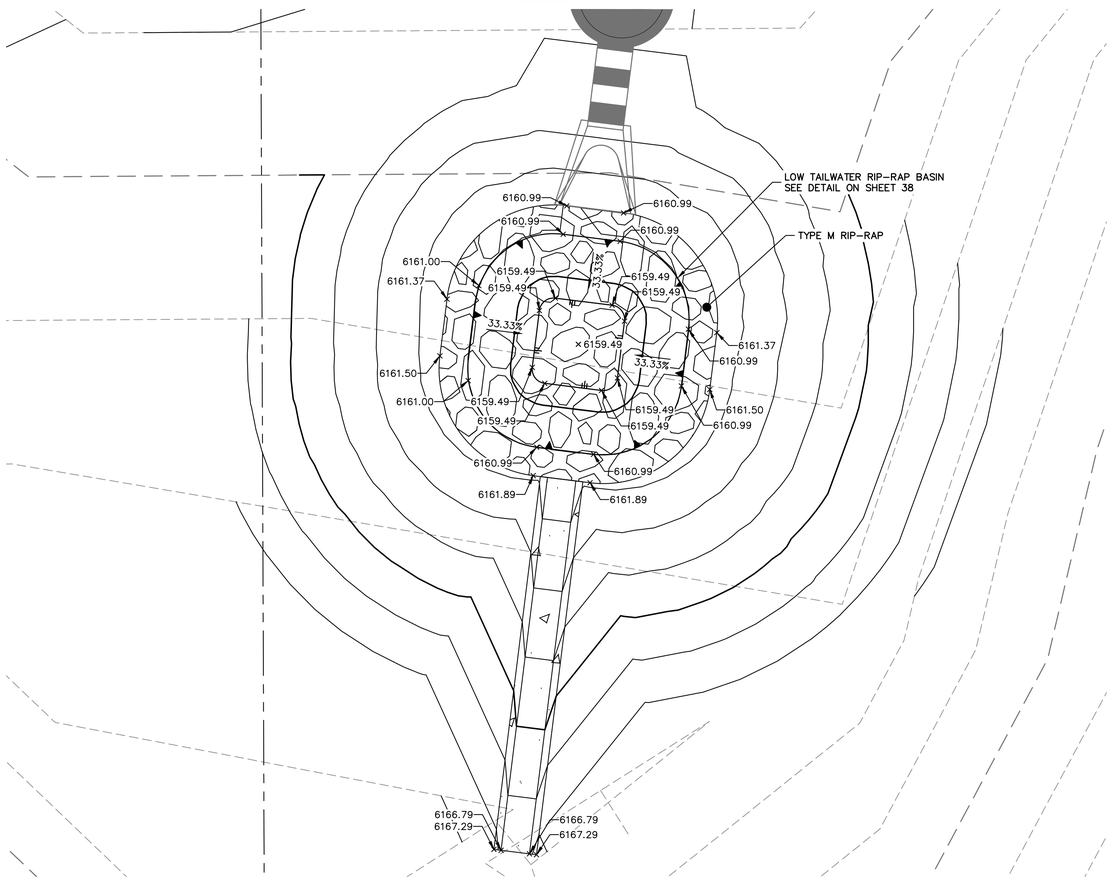

AREA E

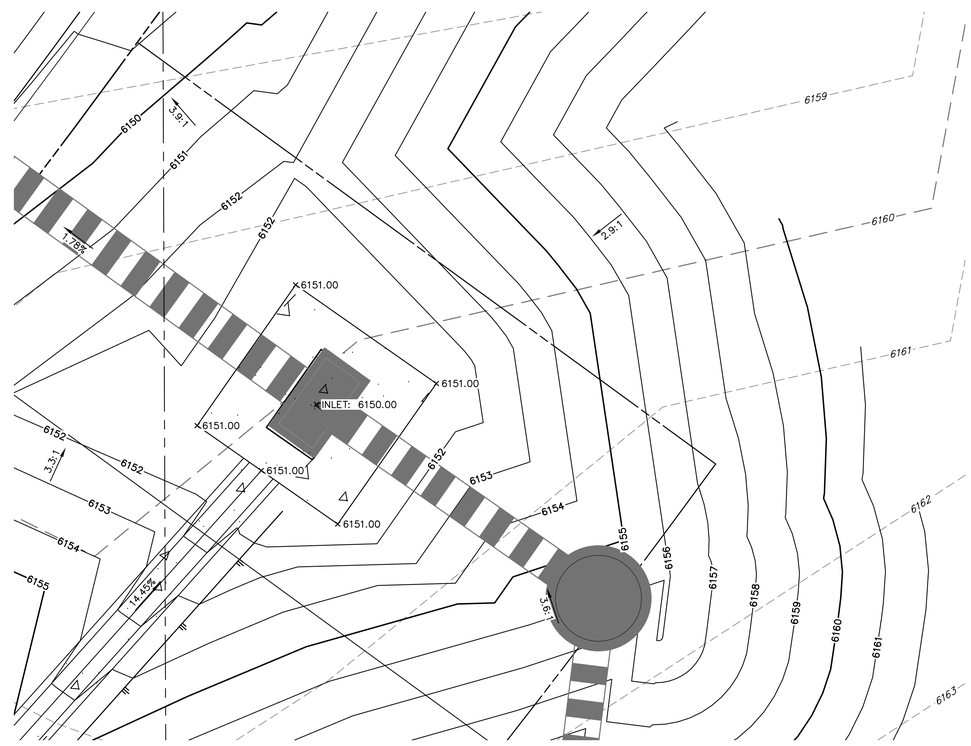

5 2.5 0 5 10
ORIGINAL SCALE: 1" = 5'

Know what's **below.**
Call before you dig.

CITY OF LONE TREE

DATE

THESE CONSTRUCTION PLANS HAVE BEEN REVIEWED BY THE CITY OF LONE TREE FOR STREET AND DRAINAGE, SIGNAGE AND STRIPING IMPROVEMENTS ONLY.

ENGINEERING DIVISION ACCEPTANCE BLOCK

ENGINEER'S STATEMENT
PREPARED UNDER MY SUPERVISION

KEVIN ROHRBOUGH, PE — DATE
COLORADO P.E. 48992
FOR AND ON BEHALF OF JR ENGINEERING, LLC

COLORADO REGISTERED KEVIN S. ROHRBOUGH 48992 9/4/26 PROFESSIONAL ENGINEER

UNTIL SUCH TIME AS THESE DRAWINGS ARE APPROVED BY THE APPROPRIATE REVIEWING AGENCIES, JR ENGINEERING APPROVES THEIR USE ONLY FOR THE PURPOSES DESIGNATED BY WRITTEN AUTHORIZATION.

PREPARED FOR
RAMPART RANGE METRO DISTRICT
2001 16TH STREET
SUITE 1700
DENVER, CO 80202
PHONE: 303-779-5710

J·R ENGINEERING
A Westrian Company
Centennial 303-740-9393 • Colorado Springs 719-593-2593
Fort Collins 970-491-9888 • www.jrengineering.com

No.	REVISION	BY	DATE
0	FOR APPROVAL	KJR	9/2/26

H-SCALE	1"=5'
V-SCALE	N/A
DATE	9/4/26
DESIGNED BY	KAC
DRAWN BY	JJ
CHECKED BY	

HILLCAMP TRAIL

DETAILED GRADING PLAN

SHEET 16 OF 80

JOB NO. 15950.18

C:\Users\CrumpK.JRENGINEERING\DC\ACCDocs\JR Engineering\15950.12\Project Files\15950.18 Cabela Drive\Drawings\Sheet Drawings\15950.18 Cabela Drive Col.T15950.18 GR01.dwg, Detailed Grading 3, 9/8/2026 2:50:37 PM, crumpk

AREA G

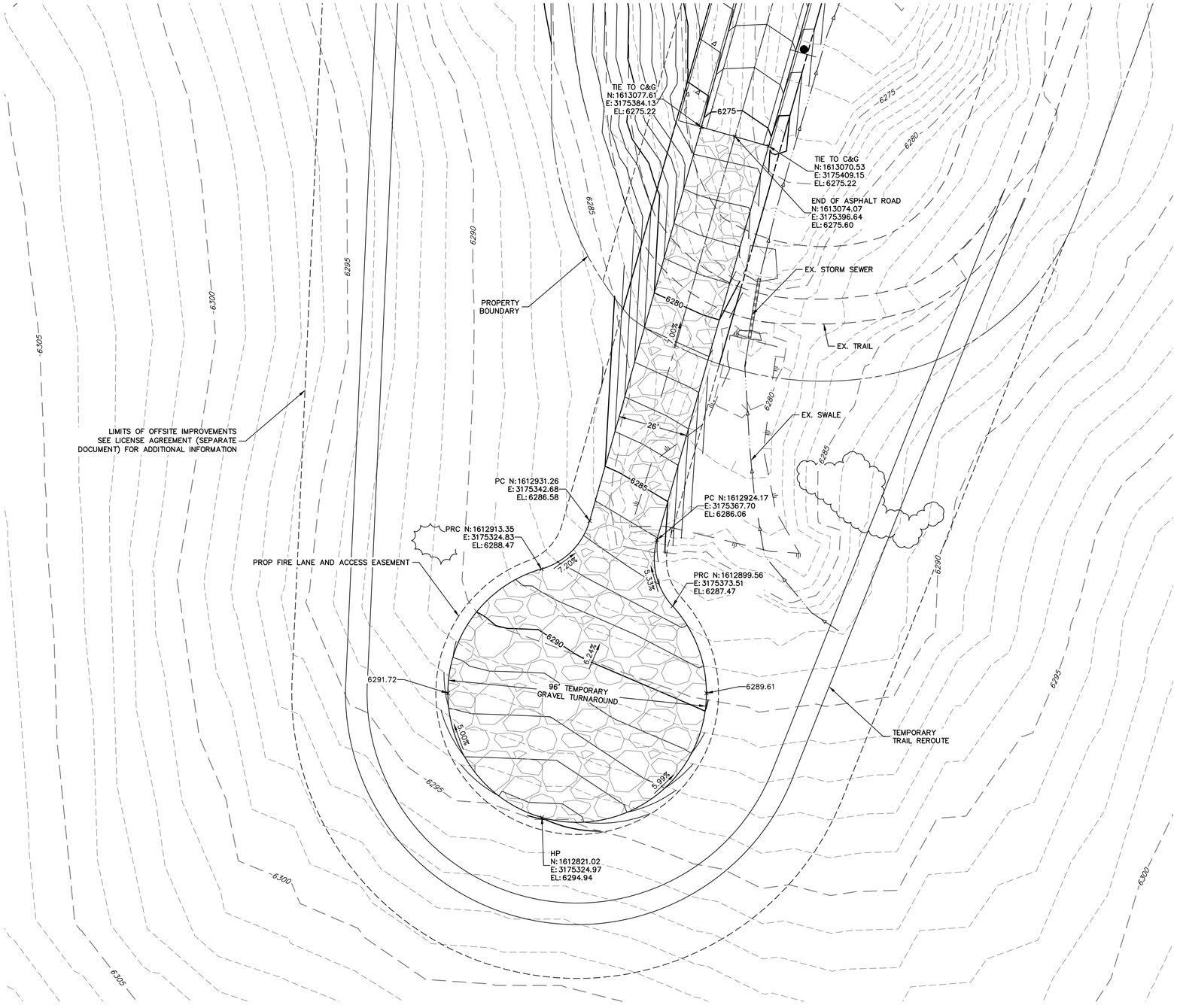

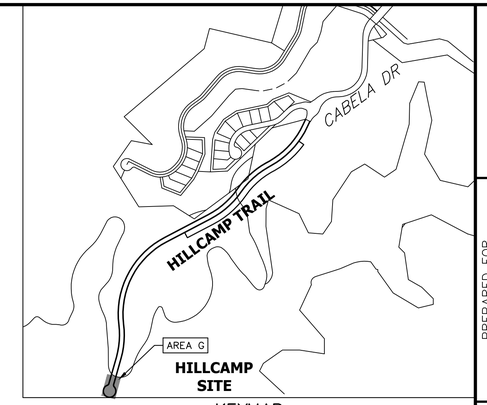

KEYMAP
SCALE: 1" = 600'

NOTE

TEMPORARY GRAVEL TURNAROUND SHALL MEET ALL IFC REQUIREMENTS AND BE CAPABLE OF SUPPORTING THE IMPOSED LOAD OF FIRE APPARATUS WEIGHING UP TO 75,000 POUNDS.

20 10 0 20 40
ORIGINAL SCALE: 1" = 20'

Know what's **below.**
Call before you dig.

CITY OF LONE TREE

DATE

THESE CONSTRUCTION PLANS HAVE BEEN REVIEWED BY THE CITY OF LONE TREE FOR STREET AND DRAINAGE, SIGNAGE AND STRIPING IMPROVEMENTS ONLY.

ENGINEERING DIVISION ACCEPTANCE BLOCK

ENGINEER'S STATEMENT

PREPARED UNDER MY SUPERVISION

KEVIN ROHRBOUGH, PE
COLORADO P.E. 48992
FOR AND ON BEHALF OF JR ENGINEERING, LLC

DATE

COLORADO REGISTERED PROFESSIONAL ENGINEER KEVIN J. ROHRBOUGH 48992 9/4/26

UNTIL SUCH TIME AS THESE DRAWINGS ARE APPROVED BY THE APPROPRIATE REVIEWING AGENCIES, JR ENGINEERING APPROVES THEIR USE ONLY FOR THE PURPOSES DESIGNATED BY WRITTEN AUTHORIZATION.

PREPARED FOR
RAMPART RANGE METRO DISTRICT
2001 16TH STREET
SUITE 1700
DENVER, CO 80202
PHONE: 303-779-5710

J·R ENGINEERING
A Westrian Company
Centennial 303-740-9393 • Colorado Springs 719-593-2593
Fort Collins 970-491-9888 • www.jrengineering.com

No.	REVISION	BY	DATE
0	FOR APPROVAL	KJR	9/2/26

H-SCALE	1"=20'
V-SCALE	N/A
DATE	9/4/26
DESIGNED BY	KAC
DRAWN BY	JJ
CHECKED BY	

HILLCAMP TRAIL

TEMPORARY TURNAROUND GRADING PLAN

SHEET 17 OF 80

JOB NO. 15950.18

C:\Users\Crumpk\JRENGINEERING\DC\ACCDocs\JR Engineering\1595012\Project Files\15950018 Cabela Drive\Drawings\Sheet Drawings\15950018 Cabela Drive CoLT\15950018 GR01.dwg, Temp Turnaround Grading, 9/8/2026 2:46:23 PM, crumpk

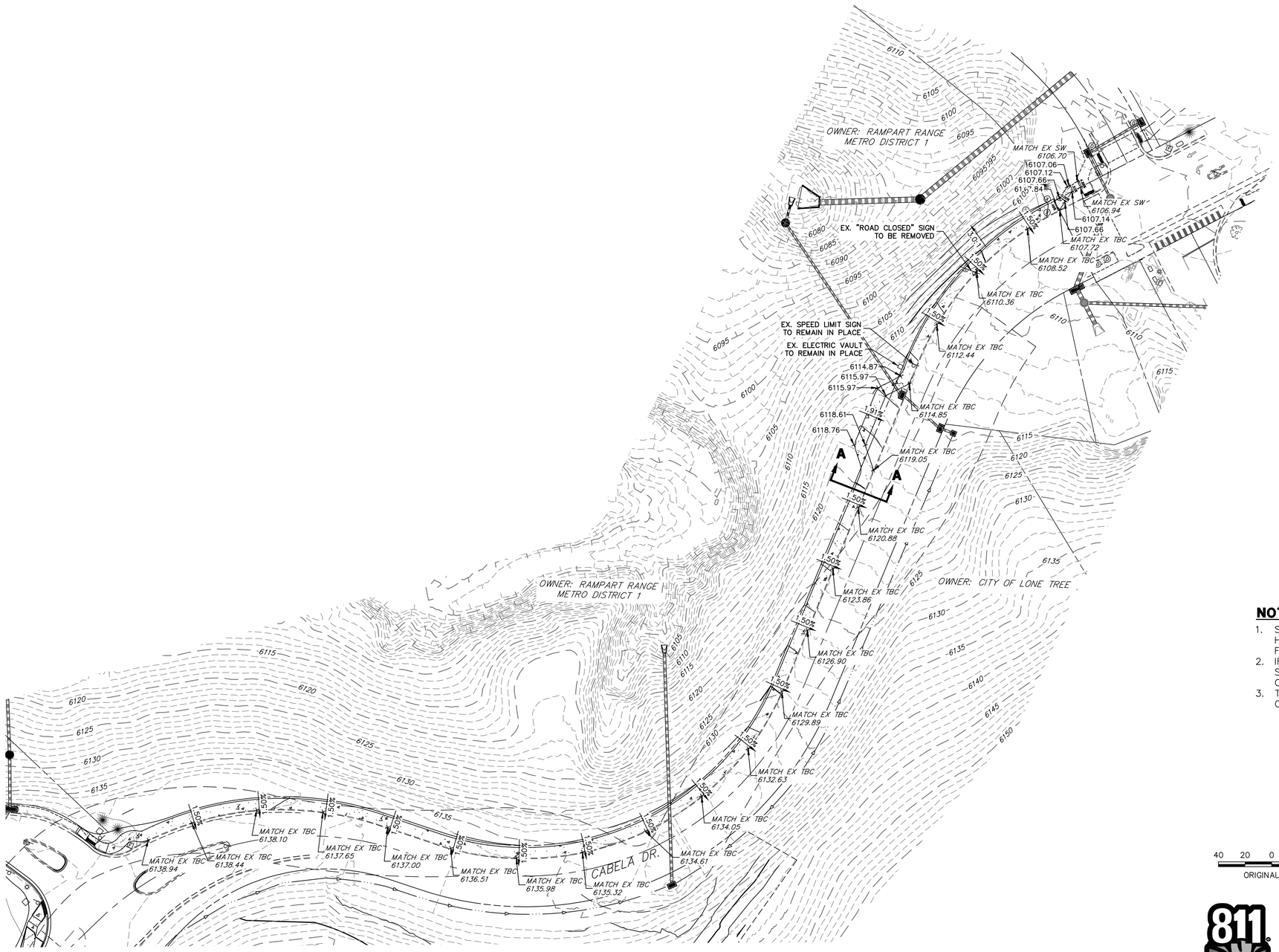

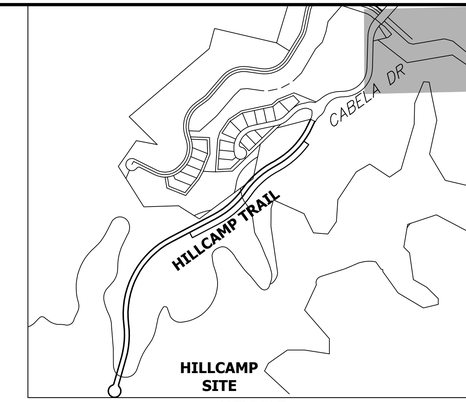

KEYMAP
SCALE: 1" = 600'

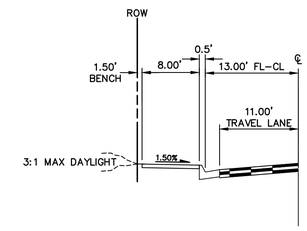

SECTION A–A
CABELA DR. SIDEWALK EXTENSION

NOTES

1. STOCKPILES AND EQUIPMENT SHALL NOT BE PLACED WITHIN HORIZONTAL DISTANCE EQUAL TO ONE–HALF THE EXCAVATION DEPTH, FROM THE EDGE OF THE EXCAVATION.
2. IF SEEPAGE IS PRESENT DURING CONSTRUCTION, THE CONTRACTOR SHALL NOTIFY THE ENGINEER AND FLATTER SLOPES SHALL BE CONSIDERED.
3. TEMPORARY TRAIL REROUTES SHALL BE INSTALLED PRIOR TO CLOSURE AND REMOVAL OF EXISTING TRAIL.

40 20 0 40 80
ORIGINAL SCALE: 1" = 40'

CITY OF LONE TREE

DATE

THESE CONSTRUCTION PLANS HAVE BEEN REVIEWED BY THE CITY OF LONE TREE FOR STREET AND DRAINAGE, SIGNAGE AND STRIPING IMPROVEMENTS ONLY.

ENGINEERING DIVISION ACCEPTANCE BLOCK

811 Know what's below. Call before you dig.

ENGINEER'S STATEMENT

PREPARED UNDER MY SUPERVISION

KEVIN ROHRBOUGH, PE
COLORADO P.E. 48992
FOR AND ON BEHALF OF JR ENGINEERING, LLC

DATE

COLORADO REGISTERED KEVIN J. ROHRBOUGH 48992 9/4/26 PROFESSIONAL ENGINEER

UNTIL SUCH TIME AS THESE DRAWINGS ARE APPROVED BY THE APPROPRIATE REVIEWING AGENCIES, JR ENGINEERING APPROVES THEIR USE ONLY FOR THE PURPOSES DESIGNATED BY WRITTEN AUTHORIZATION.

PREPARED FOR
RAMPART RANGE METRO DISTRICT
8390 E CRESCENT PKWY
SUITE 300
GREENWOOD VILLAGE, CO 80111
PHONE: 303–779–5710

J·R ENGINEERING
A Westrian Company
Centennial 303–740–9393 • Colorado Springs 719–593–2593
Fort Collins 970–491–9888 • www.jrengineering.com

No.	REVISION	BY	DATE

H–SCALE	1"=40'
V–SCALE	N/A
DATE	3/27/26
DESIGNED BY	KAC
DRAWN BY	KF
CHECKED BY	

HILLCAMP TRAIL

SIDEWALK EXTENSION GRADING PLAN

SHEET 18 OF 77

JOB NO. 15950.18

C:\Users\CrumpK.JRENGINEERING\DC\ACCDocs\JR Engineering\15950\12\Project Files\15950\18 Cabela Drive\Drawings\Sheet Drawings\15950\18 Cabela Drive CoLTI\15950\18-SW GR01-1.dwg, Overall Grading, 9/8/2026 2:51:03 PM, crumpk

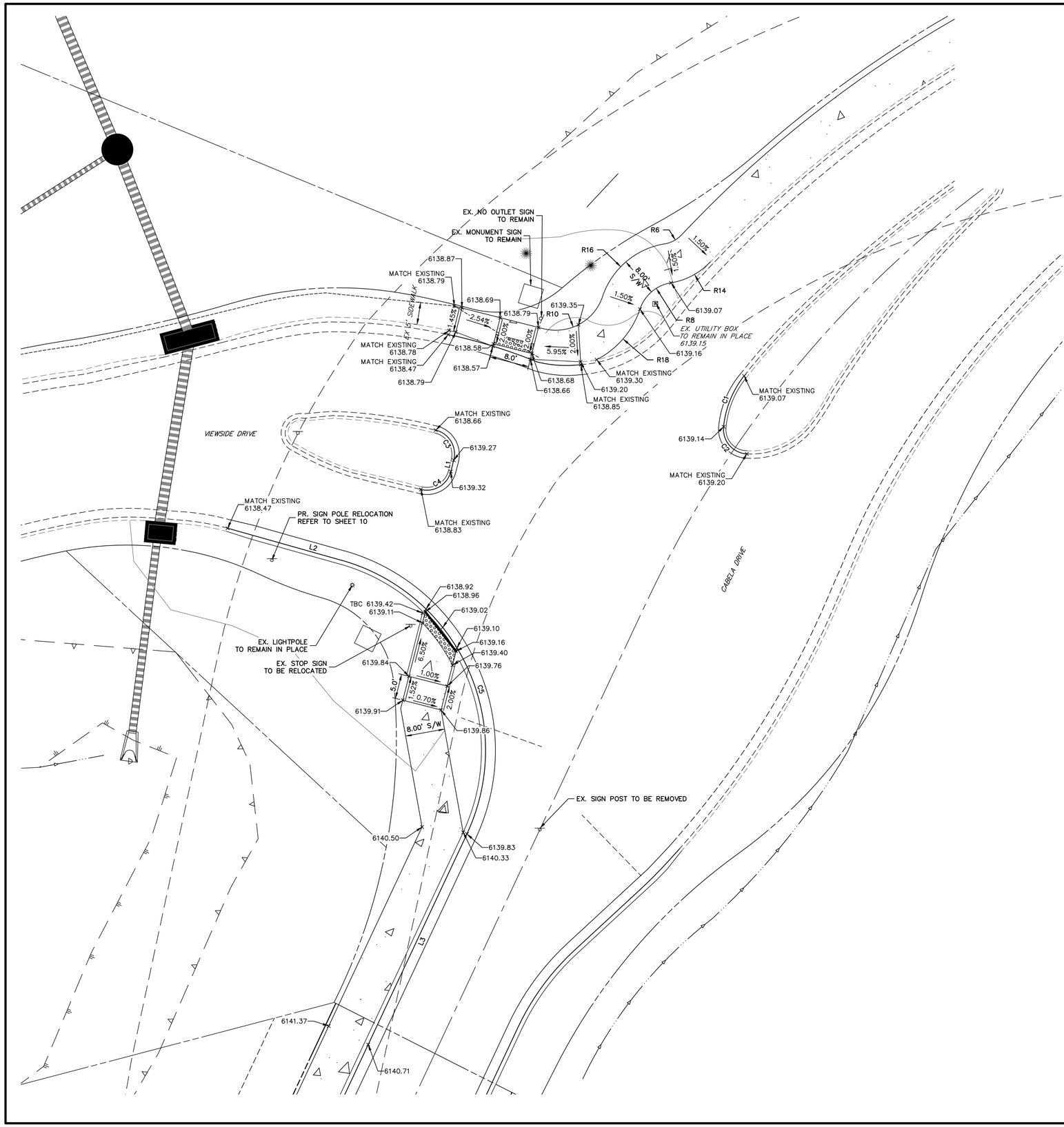

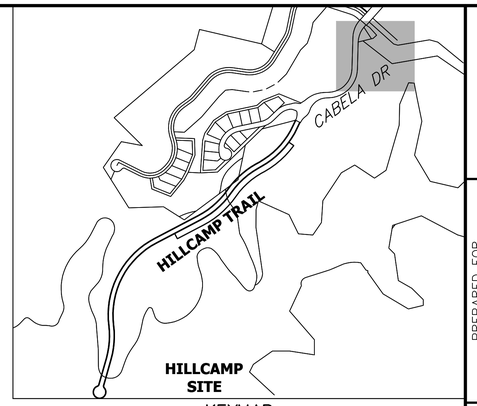

KEYMAP
SCALE: 1" = 600'

LEGEND:

DETECTABLE WARNING AREA

PROPOSED SIDEWALK

CURVE TABLE			
CURVE	DELTA	RADIUS	LENGTH
C1	32°14'28"	20.00'	11.25'
C2	92°32'40"	5.00'	8.08'
C3	90°18'58"	5.00'	7.88'
C4	89°49'20"	5.00'	7.84'
C5	99°22'04"	40.00'	69.37'

LINE TABLE		
LINE	BEARING	DISTANCE
L1	N14°16'34"E	2.38'
L2	S74°15'45"E	24.03'
L3	S25°06'19"W	47.15'

CITY OF LONE TREE

DATE

THESE CONSTRUCTION PLANS HAVE BEEN REVIEWED BY THE CITY OF LONE TREE FOR STREET AND DRAINAGE, SIGNAGE AND STRIPING IMPROVEMENTS ONLY.

ENGINEERING DIVISION ACCEPTANCE BLOCK

Know what's **below.**
Call before you dig.

10 5 0 10 20
ORIGINAL SCALE: 1" = 10'

ENGINEER'S STATEMENT

PREPARED UNDER MY SUPERVISION

KEVIN J. ROHRBOUGH, PE — DATE
COLORADO P.E. 48992
FOR AND ON BEHALF OF JR ENGINEERING, LLC

COLORADO REGISTERED PROFESSIONAL ENGINEER KEVIN J. ROHRBOUGH 48992 9/4/26

UNTIL SUCH TIME AS THESE DRAWINGS ARE APPROVED BY THE APPROPRIATE REVIEWING AGENCIES, JR ENGINEERING APPROVES THEIR USE ONLY FOR THE PURPOSES DESIGNATED BY WRITTEN AUTHORIZATION.

PREPARED FOR
RAMPART RANGE METRO DISTRICT
8390 E CRESCENT PKWY
SUITE 300
GREENWOOD VILLAGE, CO 80111
PHONE: 303-779-5710

J·R ENGINEERING
A Westrian Company
Centennial 303-740-9393 • Colorado Springs 719-593-2593
Fort Collins 970-491-9888 • www.jrengineering.com

No.	REVISION	BY	DATE

H-SCALE	1"=10'
V-SCALE	N/A
DATE	3/27/26
DESIGNED BY	KAC
DRAWN BY	KF
CHECKED BY	

HILLCAMP TRAIL

SIDEWALK EXTENSION INTERSECTION PLAN

SHEET 19 OF 77

JOB NO. 15950.18

C:\Users\CrumpK.JRENGINEERING\OD\ACCDocs\JR Engineering\15950.12\Project Files\15950.18 Cabela Drive\Drawings\Sheet Drawings\15950.18 Cabela Drive Col.T\15950.18-SW Intersection Plan.dwg, RA-1.0, 9/8/2026 2:26:26 PM, crumpk

NOTES:

1. SEE SHEET 1 FOR BENCHMARK AND SHEET 3 FOR LEGEND.
2. RETAINING WALL SHALL BE TIERED ROSETTA STONE. SEE DETAIL ON SHEET 52.
3. WALLS GREATER THAN 4' FROM BOTTOM OF FOOTING TO TOP OF WALL REQUIRE A SEPARATE SUBMITTAL FOR A BUILDING PERMIT. CONTACT THE BUILDING DEPARTMENT FOR WALL PERMIT REQUIREMENTS.
4. RETAINING WALLS WILL REQUIRE 3RD PARTY INSPECTION.
5. THE HORIZONTAL ALIGNMENT OF THE WALLS ARE SHOWN ON THESE PLANS ALONG WITH THE GRADE AT TOP AND GRADE AT BOTTOM OF THE RETAINED EARTH ENVELOPE. NO PORTIONS OF THE WALL WHICH MAY BE REQUIRED BELOW (BURIED COURSE, TOP CAP, ETC.) THE RETAINED EARTH ENVELOPE IS ACCOUNTED FOR WITHIN THE ELEVATIONS PROVIDED. SEE STRUCTURAL RETAINING WALL PLANS FOR STRUCTURAL RETAINING WALL DESIGN.
6. DRAINAGE SWALE AT TOP OF RETAINING WALL TO BE CONSTRUCTED OF CONCRETE TO DIVERT WATER AWAY FROM DRAINAGE/REINFORCED MATERIAL. REFER TO RETAINING WALL STRUCTURAL PLANS.
7. RETAINING WALL HEIGHT IS TO BE NO MORE THAN 8 FEET FROM GRADE AT BOTTOM OF WALL TO GRADE AT TOP OF WALL, UNLESS WARRANTED BY THE FINAL STRUCTURAL RETAINING WALL PLANS. WHEN MULTIPLE TIERED WALLS ARE PROPOSED, A TERRACE OF A MINIMUM OF 4 FEET IN WIDTH MUST BE PROVIDED BETWEEN TIERED WALLS.

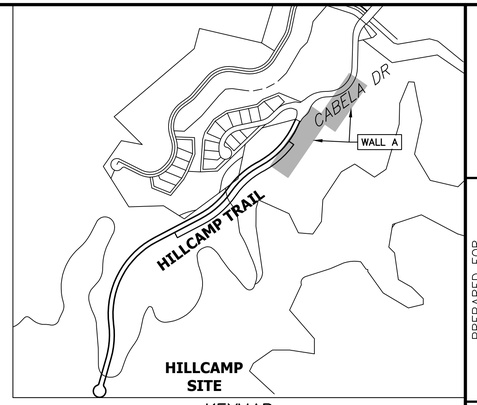

KEYMAP
SCALE: 1" = 600'

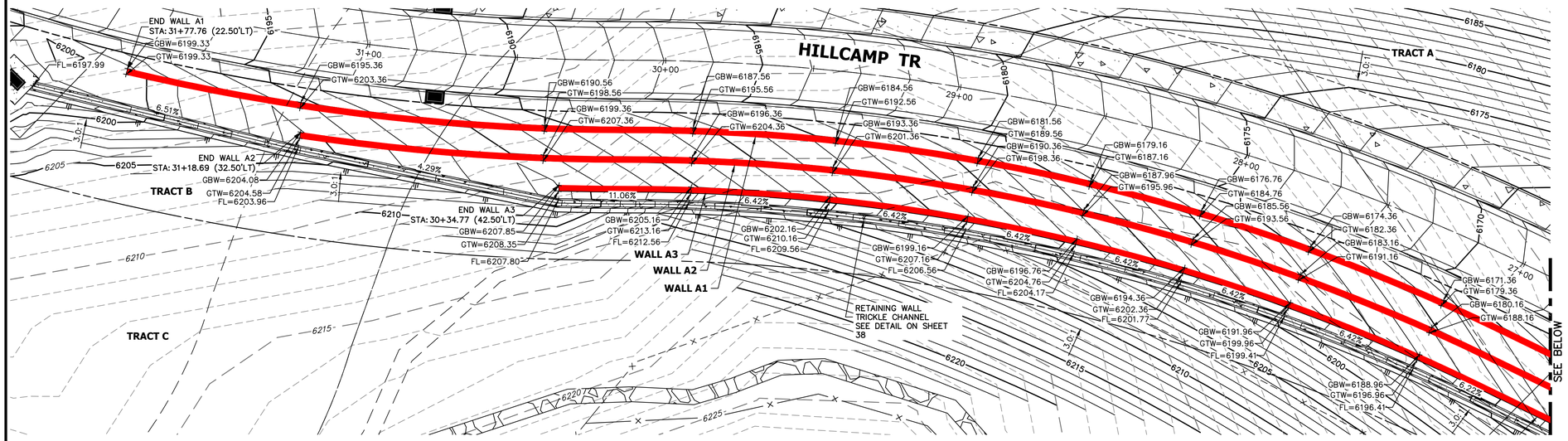

WALL A

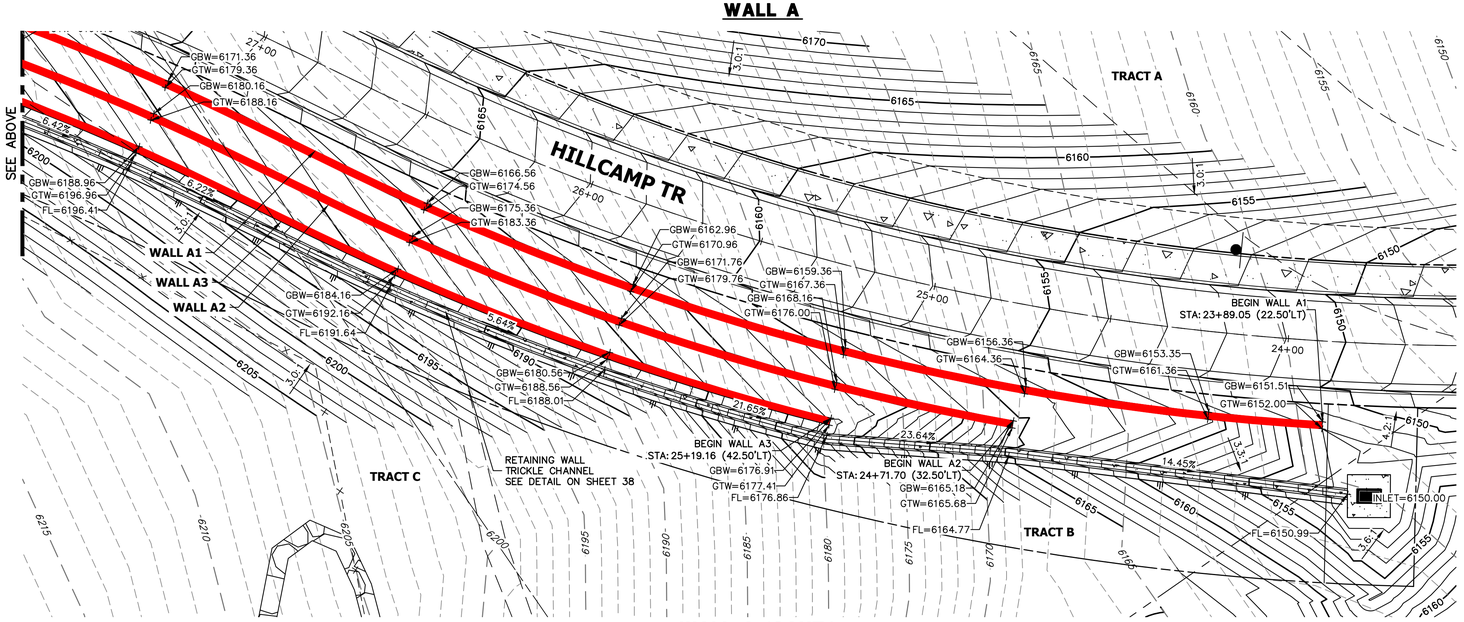

WALL A (CONT.)

LEGEND:

GTW = GRADE AT TOP OF WALL

GBW = GRADE AT BOTTOM OF WALL

FL = FLOWLINE

20 10 0 20 40

ORIGINAL SCALE: 1" = 20'

Know what's below. Call before you dig.

CITY OF LONE TREE

DATE

THESE CONSTRUCTION PLANS HAVE BEEN REVIEWED BY THE CITY OF LONE TREE FOR STREET AND DRAINAGE, SIGNAGE AND STRIPING IMPROVEMENTS ONLY.

ENGINEERING DIVISION ACCEPTANCE BLOCK

ENGINEER'S STATEMENT

PREPARED UNDER MY SUPERVISION

KEVIN ROHRBOUGH, PE
COLORADO P.E. 48992
FOR AND ON BEHALF OF JR ENGINEERING, LLC

DATE

COLORADO REGISTERED PROFESSIONAL ENGINEER KEVIN J. ROHRBOUGH 48992 9/4/26

UNTIL SUCH TIME AS THESE DRAWINGS ARE APPROVED BY THE APPROPRIATE REVIEWING AGENCIES, JR ENGINEERING APPROVES THEIR USE ONLY FOR THE PURPOSES DESIGNATED BY WRITTEN AUTHORIZATION.

PREPARED FOR
RAMPART RANGE METRO DISTRICT
2001 16TH STREET
SUITE 1700
DENVER, CO 80202
PHONE: 303-779-5710

J·R ENGINEERING
A Westrian Company
Centennial 303-740-9393 • Colorado Springs 719-593-2593
Fort Collins 970-491-9888 • www.jrengineering.com

No.	REVISION	BY	DATE
0	FOR APPROVAL	KJR	9/2/26

H-SCALE	1"=20'
V-SCALE	N/A
DATE	9/4/26
DESIGNED BY	KAC
DRAWN BY	KAC
CHECKED BY	

HILLCAMP TRAIL

RETAINING WALL PLANS

SHEET 20 OF 80

JOB NO. 15950.18

C:\Users\Ocumpk.JRENGINEERING\DC\ACCDocs\JR Engineering\15950\12\Project Files\15950\18 Cabela Drive\Drawings\Sheet Drawings\15950\18 Cabela Drive Col.TI15950\18 Retaining Walls.dwg, Wall 01, 9/8/2026 2:47:04 PM, ocumpk

NOTES:

1. SEE SHEET 1 FOR BENCHMARK AND SHEET 3 FOR LEGEND.
2. RETAINING WALL SHALL BE TIERED ROSETTA STONE. SEE DETAIL ON SHEET 52.
3. WALLS GREATER THAN 4' FROM BOTTOM OF FOOTING TO TOP OF WALL REQUIRE A SEPARATE SUBMITTAL FOR A BUILDING PERMIT. CONTACT THE BUILDING DEPARTMENT FOR WALL PERMIT REQUIREMENTS.
4. RETAINING WALLS WILL REQUIRE 3RD PARTY INSPECTION.
5. THE HORIZONTAL ALIGNMENT OF THE WALLS ARE SHOWN ON THESE PLANS ALONG WITH THE GRADE AT TOP AND GRADE AT BOTTOM OF THE RETAINED EARTH ENVELOPE. NO PORTIONS OF THE WALL WHICH MAY BE REQUIRED BELOW (BURIED COURSE, TOP CAP, ETC.) THE RETAINED EARTH ENVELOPE IS ACCOUNTED FOR WITHIN THE ELEVATIONS PROVIDED. SEE STRUCTURAL RETAINING WALL PLANS FOR STRUCTURAL RETAINING WALL DESIGN.
6. DRAINAGE SWALE AT TOP OF RETAINING WALL TO BE CONSTRUCTED OF CONCRETE TO DIVERT WATER AWAY FROM DRAINAGE/REINFORCED MATERIAL. REFER TO RETAINING WALL STRUCTURAL PLANS.
7. RETAINING WALL HEIGHT IS TO BE NO MORE THAN 8 FEET FROM GRADE AT BOTTOM OF WALL TO GRADE AT TOP OF WALL, UNLESS WARRANTED BY THE FINAL STRUCTURAL RETAINING WALL PLANS. WHEN MULTIPLE TIERED WALLS ARE PROPOSED, A TERRACE OF A MINIMUM OF 4 FEET IN WIDTH MUST BE PROVIDED BETWEEN TIERED WALLS.

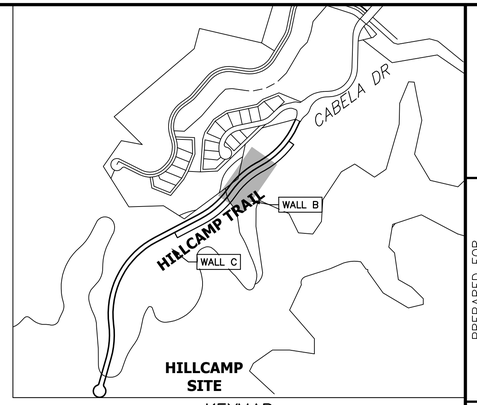

KEYMAP
SCALE: 1" = 600'

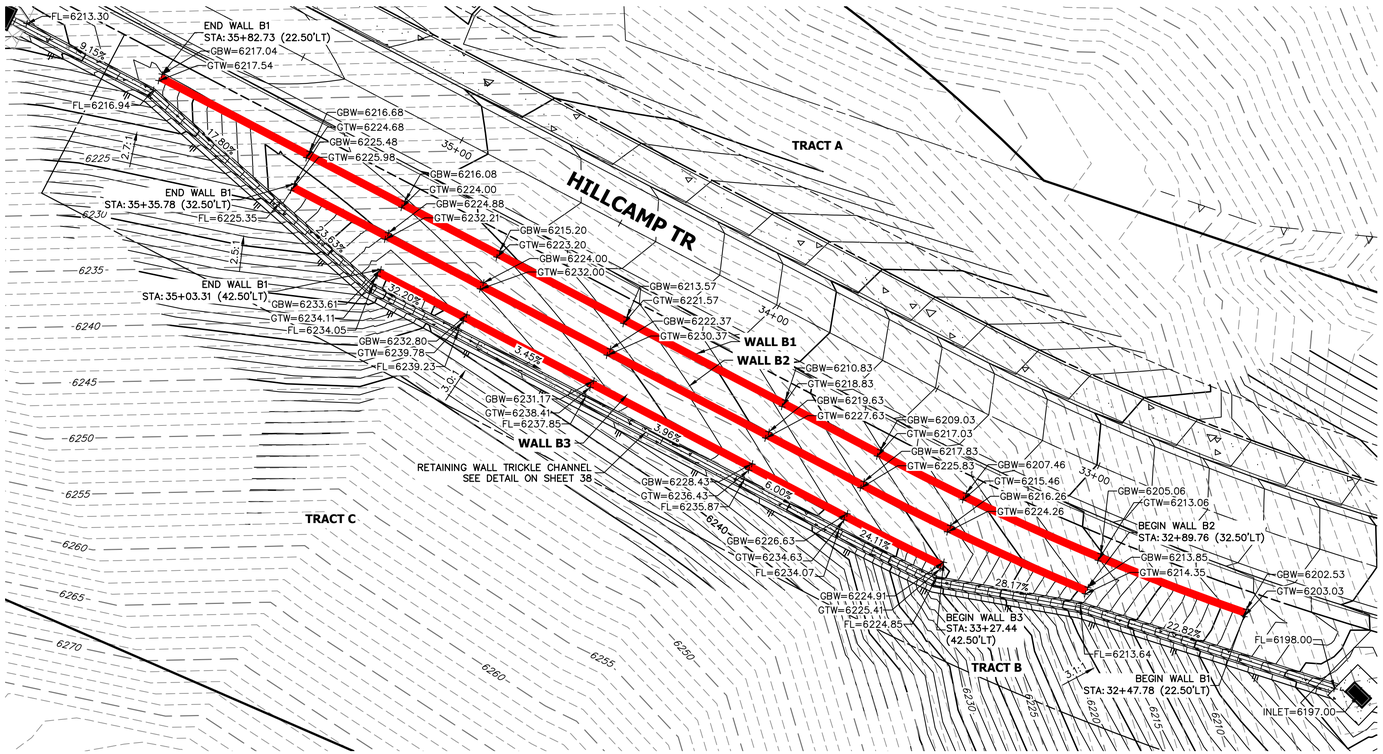

WALL B

LEGEND:

GTW = GRADE AT TOP OF WALL

GBW = GRADE AT BOTTOM OF WALL

FL = FLOWLINE

20 10 0 20 40

ORIGINAL SCALE: 1" = 20'

CITY OF LONE TREE

DATE

THESE CONSTRUCTION PLANS HAVE BEEN REVIEWED BY THE CITY OF LONE TREE FOR STREET AND DRAINAGE, SIGNAGE AND STRIPING IMPROVEMENTS ONLY.

ENGINEERING DIVISION ACCEPTANCE BLOCK

Know what's **below.** **Call** before you dig.

ENGINEER'S STATEMENT

PREPARED UNDER MY SUPERVISION

KEVIN J. ROHRBOUGH, PE — DATE
COLORADO P.E. 48992
FOR AND ON BEHALF OF JR ENGINEERING, LLC

COLORADO REGISTERED PROFESSIONAL ENGINEER KEVIN J. ROHRBOUGH 48992 9/4/26

UNTIL SUCH TIME AS THESE DRAWINGS ARE APPROVED BY THE APPROPRIATE REVIEWING AGENCIES, JR ENGINEERING APPROVES THEIR USE ONLY FOR THE PURPOSES DESIGNATED BY WRITTEN AUTHORIZATION.

PREPARED FOR
RAMPART RANGE METRO DISTRICT
2001 16TH STREET
SUITE 1700
DENVER, CO 80202
PHONE: 303-779-5710

J·R ENGINEERING
A Westrian Company
Centennial 303-740-9393 • Colorado Springs 719-593-2593
Fort Collins 970-491-9888 • www.jrengineering.com

No.	REVISION	BY	DATE
0	FOR APPROVAL	KJR	9/2/26

H-SCALE	1"=20'
V-SCALE	N/A
DATE	9/4/26
DESIGNED BY	KAC
DRAWN BY	KAC
CHECKED BY	

HILLCAMP TRAIL

RETAINING WALL PLANS

SHEET 21 OF 80

JOB NO. 15950.18

C:\Users\CrumpK.JRENGINEERING\DC\ACCDocs\JR Engineering\15950\12\Project Files\15950\18 Cabela Drive\Drawings\Sheet Drawings\15950\18 Cabela Drive CoLT\15950\18 Retaining Walls.dwg, Wall 02, 9/8/2026 2:48:52 PM, crumpk

BRIDGE ABUTMENTS

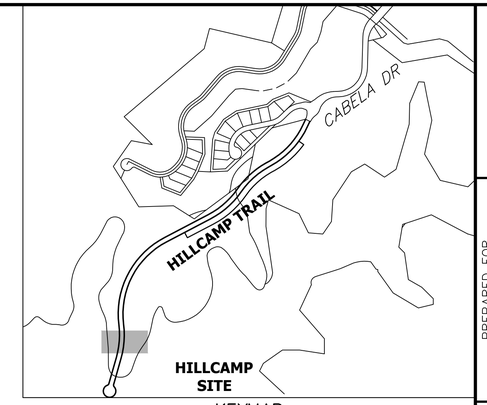

KEYMAP
SCALE: 1" = 600'

NOTES:

1. SEE SHEET 1 FOR BENCHMARK AND SHEET 3 FOR LEGEND.
2. RETAINING WALL SHALL BE TIERED ROSETTA STONE. SEE DETAIL ON SHEET 52.
3. WALLS GREATER THAN 4' FROM BOTTOM OF FOOTING TO TOP OF WALL REQUIRE A SEPARATE SUBMITTAL FOR A BUILDING PERMIT. CONTACT THE BUILDING DEPARTMENT FOR WALL PERMIT REQUIREMENTS.
4. RETAINING WALLS WILL REQUIRE 3RD PARTY INSPECTION.
5. THE HORIZONTAL ALIGNMENT OF THE WALLS ARE SHOWN ON THESE PLANS ALONG WITH THE GRADE AT TOP AND GRADE AT BOTTOM OF THE RETAINED EARTH ENVELOPE. NO PORTIONS OF THE WALL WHICH MAY BE REQUIRED BELOW (BURIED COURSE, TOP CAP, ETC.) THE RETAINED EARTH ENVELOPE IS ACCOUNTED FOR WITHIN THE ELEVATIONS PROVIDED. SEE STRUCTURAL RETAINING WALL PLANS FOR STRUCTURAL RETAINING WALL DESIGN.
6. DRAINAGE SWALE AT TOP OF RETAINING WALL TO BE CONSTRUCTED OF CONCRETE TO DIVERT WATER AWAY FROM DRAINAGE/REINFORCED MATERIAL. REFER TO RETAINING WALL STRUCTURAL PLANS.
7. RETAINING WALL HEIGHT IS TO BE NO MORE THAN 8 FEET FROM GRADE AT BOTTOM OF WALL TO GRADE AT TOP OF WALL, UNLESS WARRANTED BY THE FINAL STRUCTURAL RETAINING WALL PLANS. WHEN MULTIPLE TIERED WALLS ARE PROPOSED, A TERRACE OF A MINIMUM OF 4 FEET IN WIDTH MUST BE PROVIDED BETWEEN TIERED WALLS.
8. SEE SHEET 40 FOR EASTERN WALL ABUTMENT DETAIL INCLUDING SCOUR PROTECTION.

LEGEND:

GTW = GRADE AT TOP OF WALL

GBW = GRADE AT BOTTOM OF WALL

FL = FLOWLINE

N

10 5 0 10 20
ORIGINAL SCALE: 1" = 10'

CITY OF LONE TREE

DATE

THESE CONSTRUCTION PLANS HAVE BEEN REVIEWED BY THE CITY OF LONE TREE FOR STREET AND DRAINAGE, SIGNAGE AND STRIPING IMPROVEMENTS ONLY.

ENGINEERING DIVISION ACCEPTANCE BLOCK

811 Know what's below. Call before you dig.

ENGINEER'S STATEMENT

PREPARED UNDER MY SUPERVISION

KEVIN ROHRBOUGH, PE
COLORADO P.E. 48992
FOR AND ON BEHALF OF JR ENGINEERING, LLC

DATE

COLORADO REGISTERED PROFESSIONAL ENGINEER
KEVIN J. ROHRBOUGH
48992
9/4/26

UNTIL SUCH TIME AS THESE DRAWINGS ARE APPROVED BY THE APPROPRIATE REVIEWING AGENCIES, JR ENGINEERING APPROVES THEIR USE ONLY FOR THE PURPOSES DESIGNATED BY WRITTEN AUTHORIZATION.

PREPARED FOR
RAMPART RANGE METRO DISTRICT
2001 16TH STREET
SUITE 1700
DENVER, CO 80202
PHONE: 303-779-5710

J·R ENGINEERING
A Westrian Company
Centennial 303-740-9393 • Colorado Springs 719-593-2593
Fort Collins 970-491-9888 • www.jrengineering.com

No.	REVISION	BY	DATE
0	FOR APPROVAL	KJR	9/2/26

H-SCALE	1"=10'
V-SCALE	N/A
DATE	9/4/26
DESIGNED BY	KAC
DRAWN BY	KAC
CHECKED BY	

HILLCAMP TRAIL

RETAINING WALL PLANS

SHEET 22 OF 80

JOB NO. 15950.18

C:\Users\Ccrumpk.JRENGINEERING\DC\ACCDocs\JR Engineering\15950.18 Cabela Drive\Drawings\Sheet Drawings\15950.18 Cabela Drive Col.T\15950.18 Retaining Walls.dwg, Wall 03, 9/8/2026 2:46:44 PM, ccrumpk

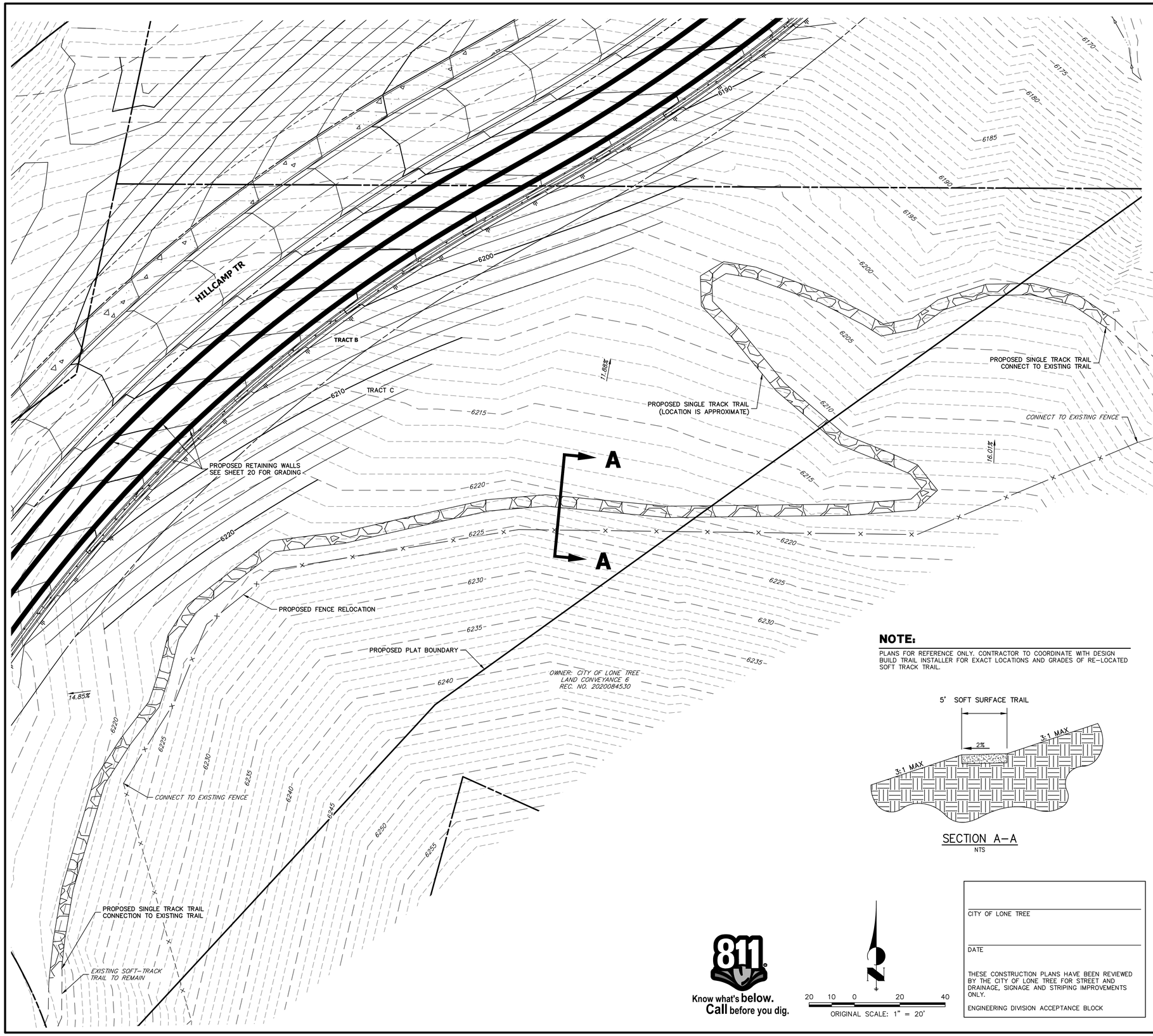

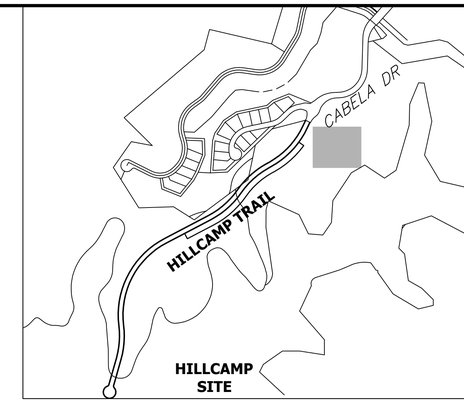

KEYMAP
SCALE: 1" = 600'

SINGLE TRACK AND NATURAL SURFACE TRAIL SPECIFICATIONS/NOTES

1. FINAL TRAIL DESIGN SHALL BE DONE BY PROFESSIONAL TRAILBUILDERS ASSOCIATION (PTBA) MEMBER COMPANIES. DESIGNER SHALL HAVE EXPERIENCE IN DESIGNING SUSTAINABLE, NATURAL SURFACE TRAILS. EVIDENCE SHALL BE SUBMITTED TO THE CITY BY THE DEVELOPER OR CONTRACTOR PRIOR TO COMMENCING TRAIL CONSTRUCTION.

2. FINAL TRAIL DESIGN SHALL INCLUDE FIELD FLAGGING APPROXIMATELY EVERY 15-25' CONSISTING OF PIN FLAGS AND/OR FLAGGING TAPE TIED IN VEGETATION. AFTER FLAGGING, TRAIL DESIGNER SHALL COLLECT GPS FINAL TRACKS AND PRODUCE GIS MAPS AND GPX TRACKS FOR THE TRAIL BUILDER TO FOLLOW. THE GIS MAPS SHALL IDENTIFY ANY ANTICIPATED REMOVAL OF EXISTING STANDS OF WOODY VEGETATION.

2.1. THE DEVELOPER OR CONTRACTOR SHALL PROVIDE THE CITY AN OPPORTUNITY TO REVIEW THE FLAGGING AND MAPS. THE CITY SHALL PROVIDE APPROVAL OR REQUESTED MODIFICATIONS WITHIN 14 DAYS.

3. FLAGGING REPRESENTS A 20' WIDE CORRIDOR, WITHIN WHICH THE TRAILBUILDER HAS THE FLEXIBILITY TO ADJUST TRAIL ALIGNMENT WITHOUT ACQUIRING ADDITIONAL REVIEWS OR APPROVALS. FLAGGING SHALL BE PLACED ON THE DOWNHILL SIDE OF THE PROPOSED TRAIL; CORNERS/TURNS ARE TYPICALLY FLAGGED TO DENOTE THE DOWNHILL TRAIL EDGE(S) AND THE APPROX. APEX OF THE CURVE. DEVIATIONS BEYOND THE 20' WIDE CORRIDOR SHOULD BE SUBMITTED TO THE DEVELOPER AND CITY FOR APPROVAL PRIOR TO BUILDING THOSE SECTIONS OF TRAIL.

4. TRAILBUILDER SHALL BE A PTBA MEMBER COMPANY. TRAILBUILDER SHALL HAVE EXPERIENCE BUILDING SUSTAINABLE, NATURAL SURFACE TRAILS INTENDED FOR BOTH HIKING AND MOUNTAIN BIKING.

5. TRAIL GUIDELINES:

5.1. ALL NATURAL SURFACE TRAILS ARE INTENDED TO BE:
5.1.1. SUSTAINABLE, ROLLING CONTOUR DESIGN TRAILS SUITABLE FOR HIKING AND MOUNTAIN BIKING
5.1.2. BI-DIRECTIONAL, EASY TO INTERMEDIATE DIFFICULTY TRAILS.
5.1.3. DESIGNED TO LIMIT AND MAINTAIN BIKE SPEEDS THAT ARE CONDUCIVE TO MULTIPLE USER TYPES.

5.2. TRAILS SHOULD GENERALLY BE WITHIN 4-8% SLOPE, ALTHOUGH THEY WILL LIKELY BE SLIGHTLY STEEPER WHEN CROSSING DRAINAGES. WHEN CROSSING DRAINAGES, TRAILS STILL NEED TO AVOID FALL-LINE ALIGNMENTS.

5.3. WHERE POSSIBLE, LOCATE CLIMBING TURNS WITHIN STANDS OF VEGETATION TO PROVIDE STRUCTURED CORNERS THAT ARE DIFFICULT TO SHORTCUT. REMOVE AS LITTLE VEGETATION AS POSSIBLE DURING TRAIL CONSTRUCTION.

5.4. IN ADDITION TO THE CRITERIA LISTED ABOVE, THE SINGLE TRACK TRAILS CAN BE FURTHER OPTIMIZED FOR BIKE USERS AS LONG AS THE TRAILS ARE STILL ENJOYABLE FOR HIKERS. THIS INCLUDES LIMITING SPEED AND MAINTAINING ADEQUATE SIGHT LINES TO AVOID USER CONFLICTS.

5.5. TRAIL INTERSECTIONS SHOULD EITHER BE TRIANGLES OR ENLARGED PLATFORMS. BOTH STRATEGIES SHOULD FOLLOW THE NATURAL FLOW OF MOVING FROM ONE TRAIL TO THE OTHER IN ORDER TO AVOID SOCIAL SHORTCUTTING.

5.6. FIELD MODIFICATIONS TO TRAIL ALIGNMENT SHALL MINIMIZE VEGETATION REMOVAL AND OVERALL GROUND DISTURBANCE WHILE REMAINING CONSISTENT WITH THE APPROVED TRAIL DESIGN INTENT.

5.7. REMOVAL OF STANDS OF WOODY VEGETATION OR EXISTING NATURALLY OCCURRING ROCK FEATURES WILL BE MINIMIZED, AND WILL BE A FACTOR OF CONSIDERATION FOR THE CITY WHEN REVIEWING AND APPROVING OF THE PROPOSED, FLAGGED TRAIL CORRIDORS PRIOR TO CONSTRUCTION.

5.8. VEGETATION CLEARING LIMITS SHALL GENERALLY BE LIMITED TO 1' BEYOND EACH SIDE OF THE TRAIL. SINGLE TRACK TRAILS SHALL INCLUDE A 2' TREAD WITH 1' CLEARING ZONE ON EACH SIDE. 6' NATURAL SURFACE TRAILS SHALL INCLUDE A 1' CLEARING ZONE ON EACH SIDE.

6. DEVIATIONS BEYOND THE 20' WIDE CORRIDOR SHOULD BE SUBMITTED TO THE DEVELOPER AND CITY FOR APPROVAL PRIOR TO BUILDING THOSE SECTIONS OF TRAIL. THE CONTRACTOR SHALL:
6.1. NOTIFY THE DEVELOPER AND CITY OF THE DESIRE TO ADJUST THE TRAIL CORRIDOR.
6.2. LEAVE ORIGINAL FLAGS AND FLAG PROPOSED RE-ROUTE IN A DIFFERENT COLOR.
6.3. ARRANGE A SITE VISIT TO REVIEW MODIFICATIONS IN-FIELD, WRITTEN APPROVAL FROM THE DEVELOPER AND CITY SHALL BE PROVIDED IN WRITING.

7. AFTER TRAIL CONSTRUCTION THE CONTRACTOR SHALL SCHEDULE A SITE WALK WITH THE DEVELOPER AND CITY FOR ACCEPTANCE OF THE TRAIL IMPROVEMENTS.

8. CONTRACTOR SHALL PROVIDE A FINAL GIS MAP AND GPX TRACTS SHOWING THE FINAL LOCATION OF THE TRAILS.

NOTE:

PLANS FOR REFERENCE ONLY. CONTRACTOR TO COORDINATE WITH DESIGN BUILD TRAIL INSTALLER FOR EXACT LOCATIONS AND GRADES OF RE-LOCATED SOFT TRACK TRAIL.

SECTION A-A
NTS

811
Know what's **below.**
Call before you dig.

N

20 10 0 20 40
ORIGINAL SCALE: 1" = 20'

CITY OF LONE TREE

DATE

THESE CONSTRUCTION PLANS HAVE BEEN REVIEWED BY THE CITY OF LONE TREE FOR STREET AND DRAINAGE, SIGNAGE AND STRIPING IMPROVEMENTS ONLY.

ENGINEERING DIVISION ACCEPTANCE BLOCK

ENGINEER'S STATEMENT

PREPARED UNDER MY SUPERVISION

KEVIN ROHRBOUGH, PE
COLORADO P.E. 48992
FOR AND ON BEHALF OF JR ENGINEERING, LLC

DATE

COLORADO REGISTERED PROFESSIONAL ENGINEER KEVIN J. ROHRBOUGH 48992 9/4/26

UNTIL SUCH TIME AS THESE DRAWINGS ARE APPROVED BY THE APPROPRIATE REVIEWING AGENCIES, JR ENGINEERING APPROVES THEIR USE ONLY FOR THE PURPOSES DESIGNATED BY WRITTEN AUTHORIZATION.

PREPARED FOR
RAMPART RANGE METRO DISTRICT
2001 16TH STREET
SUITE 1700
DENVER, CO 80202
PHONE: 303-779-5710

J·R ENGINEERING
A Westrian Company
Centennial 303-740-9393 • Colorado Springs 719-593-2593
Fort Collins 970-491-9888 • www.jrengineering.com

No.	REVISION	BY	DATE
0	FOR APPROVAL	KJR	9/2/26

H-SCALE	1"=20'
V-SCALE	N/A
DATE	9/4/26
DESIGNED BY	KAC
DRAWN BY	KAC
CHECKED BY	

HILLCAMP TRAIL

TRAIL REALIGNMENT AND GRADING PLAN

SHEET 23 OF 80

JOB NO. 15950.18

C:\Users\CrumpK.JRENGINEERING\DC\ACCDocs\JR Engineering\15950\12\Project Files\15950\18 Cabela Drive\Drawings\Sheet Drawings\15950\18 Cabela Drive Col.T\15950\18 TRAIL01.dwg, TRAIL01, 9/8/2026 2:47:54 PM, crumpk

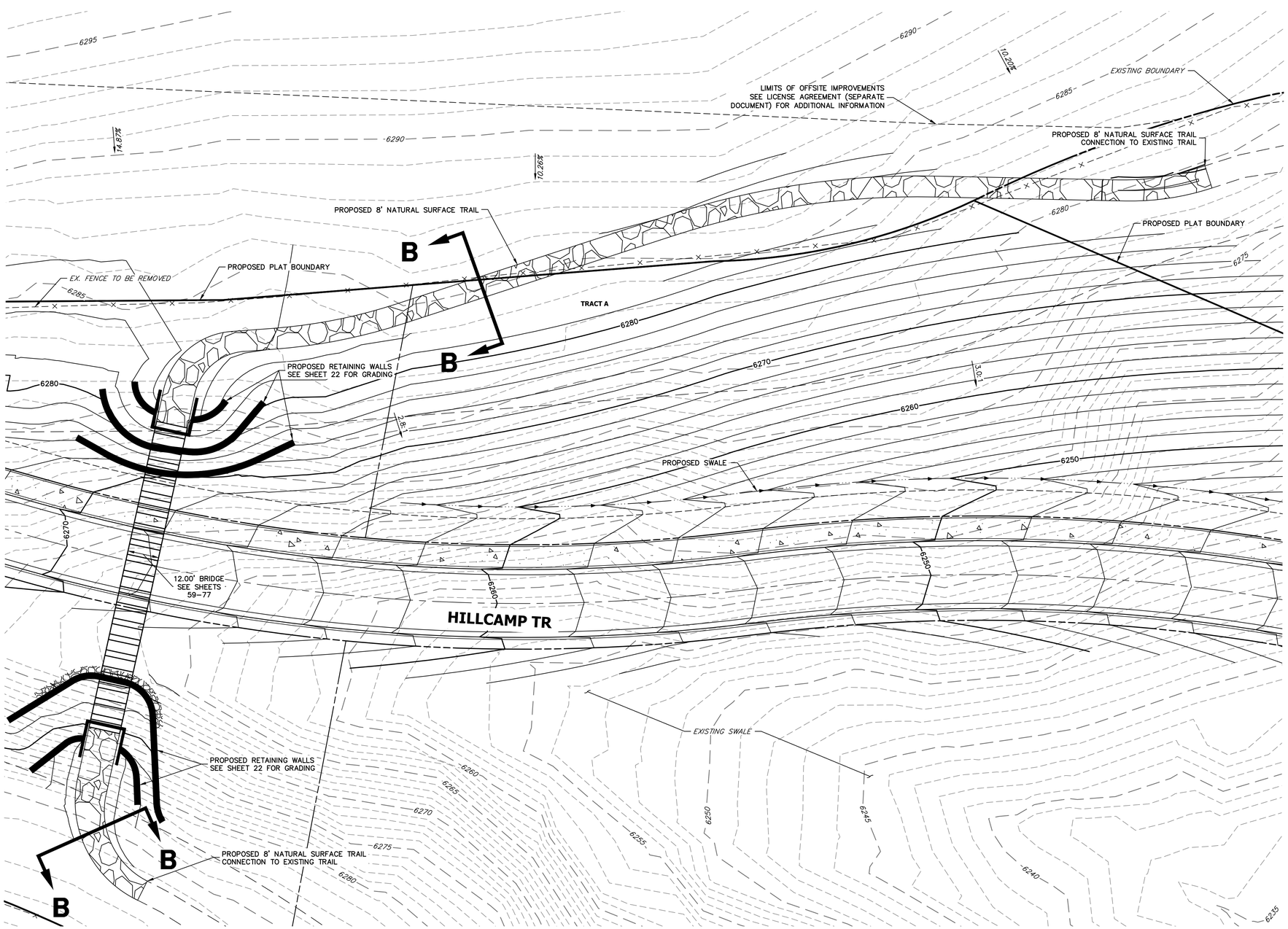

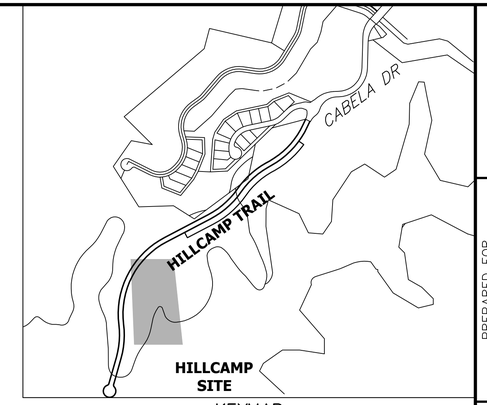

KEYMAP
SCALE: 1" = 600'

SINGLE TRACK AND NATURAL SURFACE TRAIL SPECIFICATIONS/NOTES

1. FINAL TRAIL DESIGN SHALL BE DONE BY PROFESSIONAL TRAILBUILDERS ASSOCIATION (PTBA) MEMBER COMPANIES. DESIGNER SHALL HAVE EXPERIENCE IN DESIGNING SUSTAINABLE, NATURAL SURFACE TRAILS. EVIDENCE SHALL BE SUBMITTED TO THE CITY BY THE DEVELOPER OR CONTRACTOR PRIOR TO COMMENCING TRAIL CONSTRUCTION.

2. FINAL TRAIL DESIGN SHALL INCLUDE FIELD FLAGGING APPROXIMATELY EVERY 15-25' CONSISTING OF PIN FLAGS AND/OR FLAGGING TAPE TIED IN VEGETATION. AFTER FLAGGING, TRAIL DESIGNER SHALL COLLECT GPS FINAL TRACKS AND PRODUCE GIS MAPS AND GPX TRACKS FOR THE TRAIL BUILDER TO FOLLOW. THE GIS MAPS SHALL IDENTIFY ANY ANTICIPATED REMOVAL OF EXISTING STANDS OF WOODY VEGETATION.

2.1. THE DEVELOPER OR CONTRACTOR SHALL PROVIDE THE CITY AN OPPORTUNITY TO REVIEW THE FLAGGING AND MAPS. THE CITY SHALL PROVIDE APPROVAL OR REQUESTED MODIFICATIONS WITHIN 14 DAYS.

3. FLAGGING REPRESENTS A 20' WIDE CORRIDOR, WITHIN WHICH THE TRAILBUILDER HAS THE FLEXIBILITY TO ADJUST TRAIL ALIGNMENT WITHOUT ACQUIRING ADDITIONAL REVIEWS OR APPROVALS. FLAGGING SHALL BE PLACED ON THE DOWNHILL SIDE OF THE PROPOSED TRAIL; CORNERS/TURNS ARE TYPICALLY FLAGGED TO DENOTE THE DOWNHILL TRAIL EDGE(S) AND THE APPROX. APEX OF THE CURVE. DEVIATIONS BEYOND THE 20' WIDE CORRIDOR SHOULD BE SUBMITTED TO THE DEVELOPER AND CITY FOR APPROVAL PRIOR TO BUILDING THOSE SECTIONS OF TRAIL.

4. TRAILBUILDER SHALL BE A PTBA MEMBER COMPANY. TRAILBUILDER SHALL HAVE EXPERIENCE BUILDING SUSTAINABLE, NATURAL SURFACE TRAILS INTENDED FOR BOTH HIKING AND MOUNTAIN BIKING.

5. TRAIL GUIDELINES:

5.1. ALL NATURAL SURFACE TRAILS ARE INTENDED TO BE:
5.1.1. SUSTAINABLE, ROLLING CONTOUR DESIGN TRAILS SUITABLE FOR HIKING AND MOUNTAIN BIKING
5.1.2. BI-DIRECTIONAL, EASY TO INTERMEDIATE DIFFICULTY TRAILS.
5.1.3. DESIGNED TO LIMIT AND MAINTAIN BIKE SPEEDS THAT ARE CONDUCIVE TO MULTIPLE USER TYPES.

5.2. TRAILS SHOULD GENERALLY BE WITHIN 4-8% SLOPE, ALTHOUGH THEY WILL LIKELY BE SLIGHTLY STEEPER WHEN CROSSING DRAINAGES. WHEN CROSSING DRAINAGES, TRAILS STILL NEED TO AVOID FALL-LINE ALIGNMENTS.

5.3. WHERE POSSIBLE, LOCATE CLIMBING TURNS WITHIN STANDS OF VEGETATION TO PROVIDE STRUCTURED CORNERS THAT ARE DIFFICULT TO SHORTCUT. REMOVE AS LITTLE VEGETATION AS POSSIBLE DURING TRAIL CONSTRUCTION.

5.4. IN ADDITION TO THE CRITERIA LISTED ABOVE, THE SINGLE TRACK TRAILS CAN BE FURTHER OPTIMIZED FOR BIKE USERS AS LONG AS THE TRAILS ARE STILL ENJOYABLE FOR HIKERS. THIS INCLUDES LIMITING SPEED AND MAINTAINING ADEQUATE SIGHT LINES TO AVOID USER CONFLICTS.

5.5. TRAIL INTERSECTIONS SHOULD EITHER BE TRIANGLES OR ENLARGED PLATFORMS. BOTH STRATEGIES SHOULD FOLLOW THE NATURAL FLOW OF MOVING FROM ONE TRAIL TO THE OTHER IN ORDER TO AVOID SOCIAL SHORTCUTTING.

5.6. FIELD MODIFICATIONS TO TRAIL ALIGNMENT SHALL MINIMIZE VEGETATION REMOVAL AND OVERALL GROUND DISTURBANCE WHILE REMAINING CONSISTENT WITH THE APPROVED TRAIL DESIGN INTENT.

5.7. REMOVAL OF STANDS OF WOODY VEGETATION OR EXISTING NATURALLY OCCURRING ROCK FEATURES WILL BE MINIMIZED, AND WILL BE A FACTOR OF CONSIDERATION FOR THE CITY WHEN REVIEWING AND APPROVING OF THE PROPOSED, FLAGGED TRAIL CORRIDORS PRIOR TO CONSTRUCTION.

5.8. VEGETATION CLEARING LIMITS SHALL GENERALLY BE LIMITED TO 1' BEYOND EACH SIDE OF THE TRAIL. SINGLE TRACK TRAILS SHALL INCLUDE A 2' TREAD WITH 1' CLEARING ZONE ON EACH SIDE. 6' NATURAL SURFACE TRAILS SHALL INCLUDE A 1' CLEARING ZONE ON EACH SIDE.

6. DEVIATIONS BEYOND THE 20' WIDE CORRIDOR SHOULD BE SUBMITTED TO THE DEVELOPER AND CITY FOR APPROVAL PRIOR TO BUILDING THOSE SECTIONS OF TRAIL. THE CONTRACTOR SHALL:
6.1. NOTIFY THE DEVELOPER AND CITY OF THE DESIRE TO ADJUST THE TRAIL CORRIDOR.
6.2. LEAVE ORIGINAL FLAGS AND FLAG PROPOSED RE-ROUTE IN A DIFFERENT COLOR.
6.3. ARRANGE A SITE VISIT TO REVIEW MODIFICATIONS IN-FIELD, WRITTEN APPROVAL FROM THE DEVELOPER AND CITY SHALL BE PROVIDED IN WRITING.

7. AFTER TRAIL CONSTRUCTION THE CONTRACTOR SHALL SCHEDULE A SITE WALK WITH THE DEVELOPER AND CITY FOR ACCEPTANCE OF THE TRAIL IMPROVEMENTS.

8. CONTRACTOR SHALL PROVIDE A FINAL GIS MAP AND GPX TRACTS SHOWING THE FINAL LOCATION OF THE TRAILS.

NOTE:

PLANS FOR REFERENCE ONLY. CONTRACTOR TO COORDINATE WITH DESIGN BUILD TRAIL INSTALLER FOR EXACT LOCATIONS AND GRADES OF RE-LOCATED SOFT TRACK TRAIL.

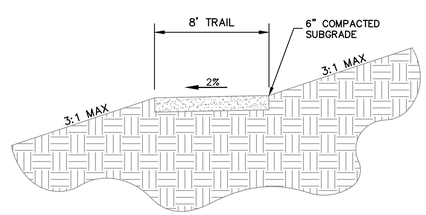

SECTION B-B
DOUGLAS COUNTY EAST-WEST TRAIL
NTS

811
Know what's below.
Call before you dig.

20 10 0 20 40
ORIGINAL SCALE: 1" = 20'

CITY OF LONE TREE

DATE

THESE CONSTRUCTION PLANS HAVE BEEN REVIEWED BY THE CITY OF LONE TREE FOR STREET AND DRAINAGE, SIGNAGE AND STRIPING IMPROVEMENTS ONLY.

ENGINEERING DIVISION ACCEPTANCE BLOCK

ENGINEER'S STATEMENT

PREPARED UNDER MY SUPERVISION

COLORADO REGISTERED KEVIN J. ROHRBOUGH 48992 9/4/26 PROFESSIONAL ENGINEER

KEVIN ROHRBOUGH, PE — DATE
COLORADO P.E. 48992
FOR AND ON BEHALF OF JR ENGINEERING, LLC

UNTIL SUCH TIME AS THESE DRAWINGS ARE APPROVED BY THE APPROPRIATE REVIEWING AGENCIES, JR ENGINEERING APPROVES THEIR USE ONLY FOR THE PURPOSES DESIGNATED BY WRITTEN AUTHORIZATION.

PREPARED FOR
RAMPART RANGE METRO DISTRICT
2001 16TH STREET
SUITE 1700
DENVER, CO 80202
PHONE: 303-779-5710

J·R ENGINEERING
A Westrian Company
Centennial 303-740-9393 • Colorado Springs 719-593-2593
Fort Collins 970-491-9888 • www.jrengineering.com

No.	REVISION	BY	DATE
0	FOR APPROVAL	KJR	9/2/26

H-SCALE	1"=20'
V-SCALE	N/A
DATE	9/4/26
DESIGNED BY	KAC
DRAWN BY	KAC
CHECKED BY	

HILLCAMP TRAIL

TRAIL REALIGNMENT AND GRADING PLAN

SHEET 24 OF 80

JOB NO. 15950.18

C:\Users\CrumpK.JRENGINEERING\DC\ACCDocs\JR Engineering\15950112\Project Files\15950118 Cabela Drive\Drawings\Sheet Drawings\15950118 Cabela Drive CoLT\15950118 TRAIL01.dwg, TRAIL02, 9/8/2026 2:48:05 PM, crumpk

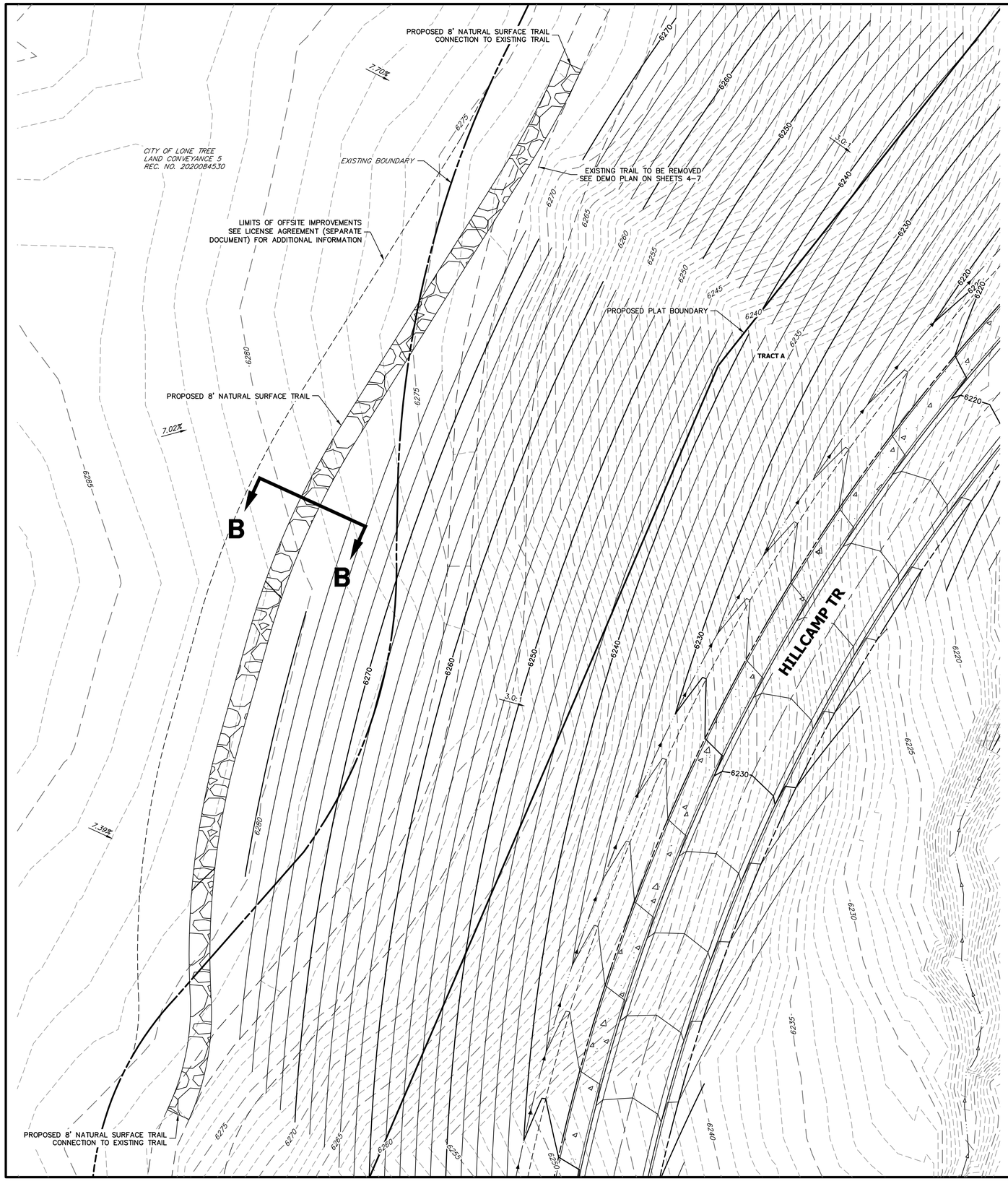

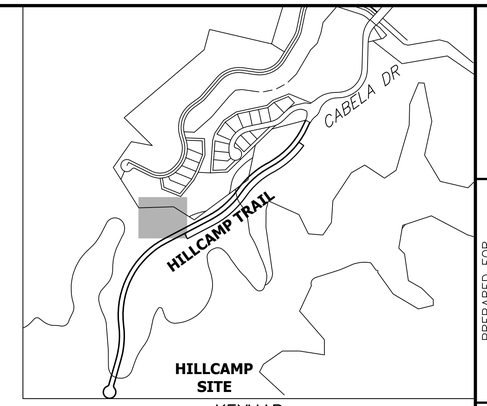

KEYMAP
SCALE: 1" = 600'

NOTE:

PLANS FOR REFERENCE ONLY. CONTRACTOR TO COORDINATE WITH DESIGN BUILD TRAIL INSTALLER FOR EXACT LOCATIONS AND GRADES OF RE-LOCATED SOFT TRACK TRAIL.

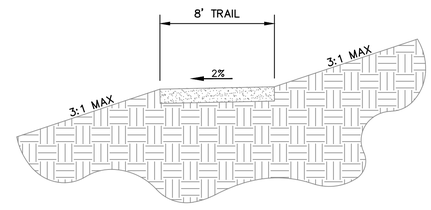

SECTION B-B
DOUGLAS COUNTY EAST-WEST TRAIL
NTS

Know what's **below.**
Call before you dig.

20 10 0 20 40
ORIGINAL SCALE: 1" = 20'

CITY OF LONE TREE

DATE

THESE CONSTRUCTION PLANS HAVE BEEN REVIEWED BY THE CITY OF LONE TREE FOR STREET AND DRAINAGE, SIGNAGE AND STRIPING IMPROVEMENTS ONLY.

ENGINEERING DIVISION ACCEPTANCE BLOCK

SINGLE TRACK AND NATURAL SURFACE TRAIL SPECIFICATIONS/NOTES

1. FINAL TRAIL DESIGN SHALL BE DONE BY PROFESSIONAL TRAILBUILDERS ASSOCIATION (PTBA) MEMBER COMPANIES. DESIGNER SHALL HAVE EXPERIENCE IN DESIGNING SUSTAINABLE, NATURAL SURFACE TRAILS. EVIDENCE SHALL BE SUBMITTED TO THE CITY BY THE DEVELOPER OR CONTRACTOR PRIOR TO COMMENCING TRAIL CONSTRUCTION.

2. FINAL TRAIL DESIGN SHALL INCLUDE FIELD FLAGGING APPROXIMATELY EVERY 15-25' CONSISTING OF PIN FLAGS AND/OR FLAGGING TAPE TIED IN VEGETATION. AFTER FLAGGING, TRAIL DESIGNER SHALL COLLECT GPS FINAL TRACKS AND PRODUCE GIS MAPS AND GPX TRACKS FOR THE TRAIL BUILDER TO FOLLOW. THE GIS MAPS SHALL IDENTIFY ANY ANTICIPATED REMOVAL OF EXISTING STANDS OF WOODY VEGETATION.

2.1. THE DEVELOPER OR CONTRACTOR SHALL PROVIDE THE CITY AN OPPORTUNITY TO REVIEW THE FLAGGING AND MAPS. THE CITY SHALL PROVIDE APPROVAL OR REQUESTED MODIFICATIONS WITHIN 14 DAYS.

3. FLAGGING REPRESENTS A 20' WIDE CORRIDOR, WITHIN WHICH THE TRAILBUILDER HAS THE FLEXIBILITY TO ADJUST TRAIL ALIGNMENT WITHOUT ACQUIRING ADDITIONAL REVIEWS OR APPROVALS. FLAGGING SHALL BE PLACED ON THE DOWNHILL SIDE OF THE PROPOSED TRAIL; CORNERS/TURNS ARE TYPICALLY FLAGGED TO DENOTE THE DOWNHILL TRAIL EDGE(S) AND THE APPROX. APEX OF THE CURVE. DEVIATIONS BEYOND THE 20' WIDE CORRIDOR SHOULD BE SUBMITTED TO THE DEVELOPER AND CITY FOR APPROVAL PRIOR TO BUILDING THOSE SECTIONS OF TRAIL.

4. TRAILBUILDER SHALL BE A PTBA MEMBER COMPANY. TRAILBUILDER SHALL HAVE EXPERIENCE BUILDING SUSTAINABLE, NATURAL SURFACE TRAILS INTENDED FOR BOTH HIKING AND MOUNTAIN BIKING.

5. TRAIL GUIDELINES:

5.1. ALL NATURAL SURFACE TRAILS ARE INTENDED TO BE:
5.1.1. SUSTAINABLE, ROLLING CONTOUR DESIGN TRAILS SUITABLE FOR HIKING AND MOUNTAIN BIKING
5.1.2. BI-DIRECTIONAL, EASY TO INTERMEDIATE DIFFICULTY TRAILS.
5.1.3. DESIGNED TO LIMIT AND MAINTAIN BIKE SPEEDS THAT ARE CONDUCIVE TO MULTIPLE USER TYPES.

5.2. TRAILS SHOULD GENERALLY BE WITHIN 4-8% SLOPE, ALTHOUGH THEY WILL LIKELY BE SLIGHTLY STEEPER WHEN CROSSING DRAINAGES. WHEN CROSSING DRAINAGES, TRAILS STILL NEED TO AVOID FALL-LINE ALIGNMENTS.

5.3. WHERE POSSIBLE, LOCATE CLIMBING TURNS WITHIN STANDS OF VEGETATION TO PROVIDE STRUCTURED CORNERS THAT ARE DIFFICULT TO SHORTCUT. REMOVE AS LITTLE VEGETATION AS POSSIBLE DURING TRAIL CONSTRUCTION.

5.4. IN ADDITION TO THE CRITERIA LISTED ABOVE, THE SINGLE TRACK TRAILS CAN BE FURTHER OPTIMIZED FOR BIKE USERS AS LONG AS THE TRAILS ARE STILL ENJOYABLE FOR HIKERS. THIS INCLUDES LIMITING SPEED AND MAINTAINING ADEQUATE SIGHT LINES TO AVOID USER CONFLICTS.

5.5. TRAIL INTERSECTIONS SHOULD EITHER BE TRIANGLES OR ENLARGED PLATFORMS. BOTH STRATEGIES SHOULD FOLLOW THE NATURAL FLOW OF MOVING FROM ONE TRAIL TO THE OTHER IN ORDER TO AVOID SOCIAL SHORTCUTTING.

5.6. FIELD MODIFICATIONS TO TRAIL ALIGNMENT SHALL MINIMIZE VEGETATION REMOVAL AND OVERALL GROUND DISTURBANCE WHILE REMAINING CONSISTENT WITH THE APPROVED TRAIL DESIGN INTENT.

5.7. REMOVAL OF STANDS OF WOODY VEGETATION OR EXISTING NATURALLY OCCURRING ROCK FEATURES WILL BE MINIMIZED, AND WILL BE A FACTOR OF CONSIDERATION FOR THE CITY WHEN REVIEWING AND APPROVING OF THE PROPOSED, FLAGGED TRAIL CORRIDORS PRIOR TO CONSTRUCTION.

5.8. VEGETATION CLEARING LIMITS SHALL GENERALLY BE LIMITED TO 1' BEYOND EACH SIDE OF THE TRAIL. SINGLE TRACK TRAILS SHALL INCLUDE A 2' TREAD WITH 1' CLEARING ZONE ON EACH SIDE. 6' NATURAL SURFACE TRAILS SHALL INCLUDE A 1' CLEARING ZONE ON EACH SIDE.

6. DEVIATIONS BEYOND THE 20' WIDE CORRIDOR SHOULD BE SUBMITTED TO THE DEVELOPER AND CITY FOR APPROVAL PRIOR TO BUILDING THOSE SECTIONS OF TRAIL. THE CONTRACTOR SHALL:
6.1. NOTIFY THE DEVELOPER AND CITY OF THE DESIRE TO ADJUST THE TRAIL CORRIDOR.
6.2. LEAVE ORIGINAL FLAGS AND FLAG PROPOSED RE-ROUTE IN A DIFFERENT COLOR.
6.3. ARRANGE A SITE VISIT TO REVIEW MODIFICATIONS IN-FIELD, WRITTEN APPROVAL FROM THE DEVELOPER AND CITY SHALL BE PROVIDED IN WRITING.

7. AFTER TRAIL CONSTRUCTION THE CONTRACTOR SHALL SCHEDULE A SITE WALK WITH THE DEVELOPER AND CITY FOR ACCEPTANCE OF THE TRAIL IMPROVEMENTS.

8. CONTRACTOR SHALL PROVIDE A FINAL GIS MAP AND GPX TRACTS SHOWING THE FINAL LOCATION OF THE TRAILS.

ENGINEER'S STATEMENT

PREPARED UNDER MY SUPERVISION

COLORADO REGISTERED PROFESSIONAL ENGINEER KEVIN J. ROHRBOUGH 48992 9/4/26

KEVIN ROHRBOUGH, PE — DATE
COLORADO P.E. 48992
FOR AND ON BEHALF OF JR ENGINEERING, LLC

UNTIL SUCH TIME AS THESE DRAWINGS ARE APPROVED BY THE APPROPRIATE REVIEWING AGENCIES, JR ENGINEERING APPROVES THEIR USE ONLY FOR THE PURPOSES DESIGNATED BY WRITTEN AUTHORIZATION.

PREPARED FOR
RAMPART RANGE METRO DISTRICT
2001 16TH STREET
SUITE 1700
DENVER, CO 80202
PHONE: 303-779-5710

J·R ENGINEERING
A Westrian Company
Centennial 303-740-9393 • Colorado Springs 719-593-2593
Fort Collins 970-491-9888 • www.jrengineering.com

No.	REVISION	BY	DATE
0	FOR APPROVAL	KJR	9/2/26

H-SCALE	1"=20'
V-SCALE	N/A
DATE	9/4/26
DESIGNED BY	KAC
DRAWN BY	KAC
CHECKED BY	

HILLCAMP TRAIL

TRAIL REALIGNMENT AND GRADING PLAN

SHEET 25 OF 80

JOB NO. 15950.18

C:\Users\Crumpk.JRENGINEERING\DC\ACCDocs\JR Engineering\15950.12\Project Files\15950.18 Cabela Drive\Drawings\Sheet Drawings\15950.18 Cabela Drive CoLT\15950.18 TRAIL01.dwg, TRAIL03, 9/8/2026 2:46:56 PM, crumpk

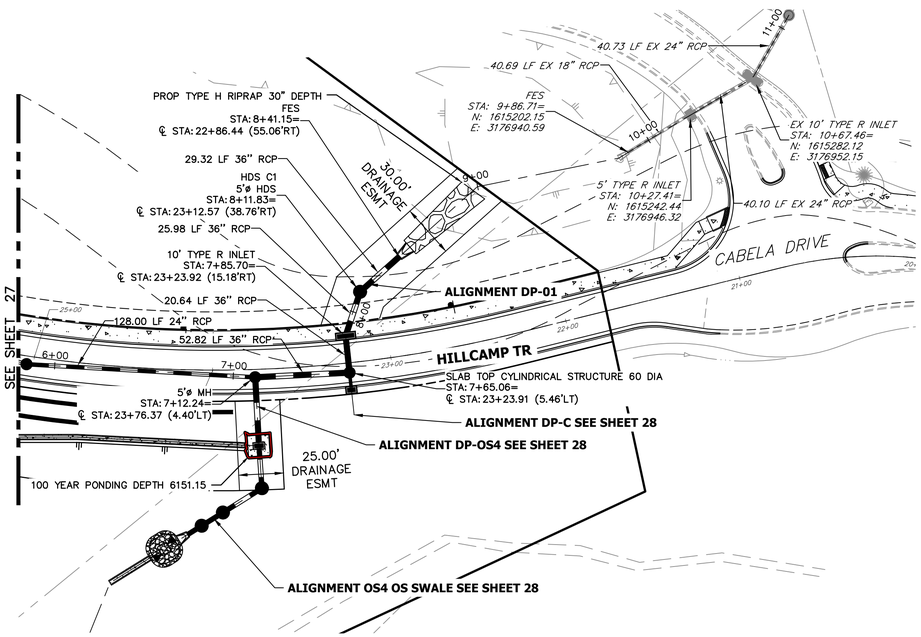

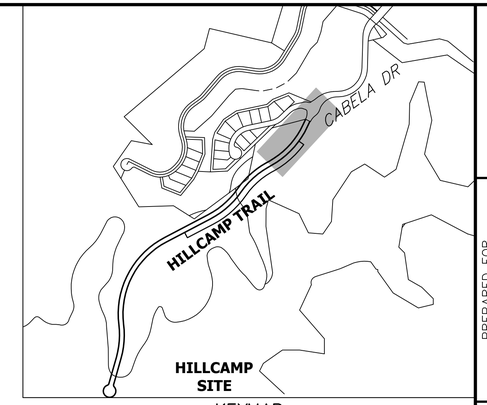

KEYMAP
SCALE: 1" = 600'

DP01 PROFILE (1)
STA 6+00.00 TO 11+00.00

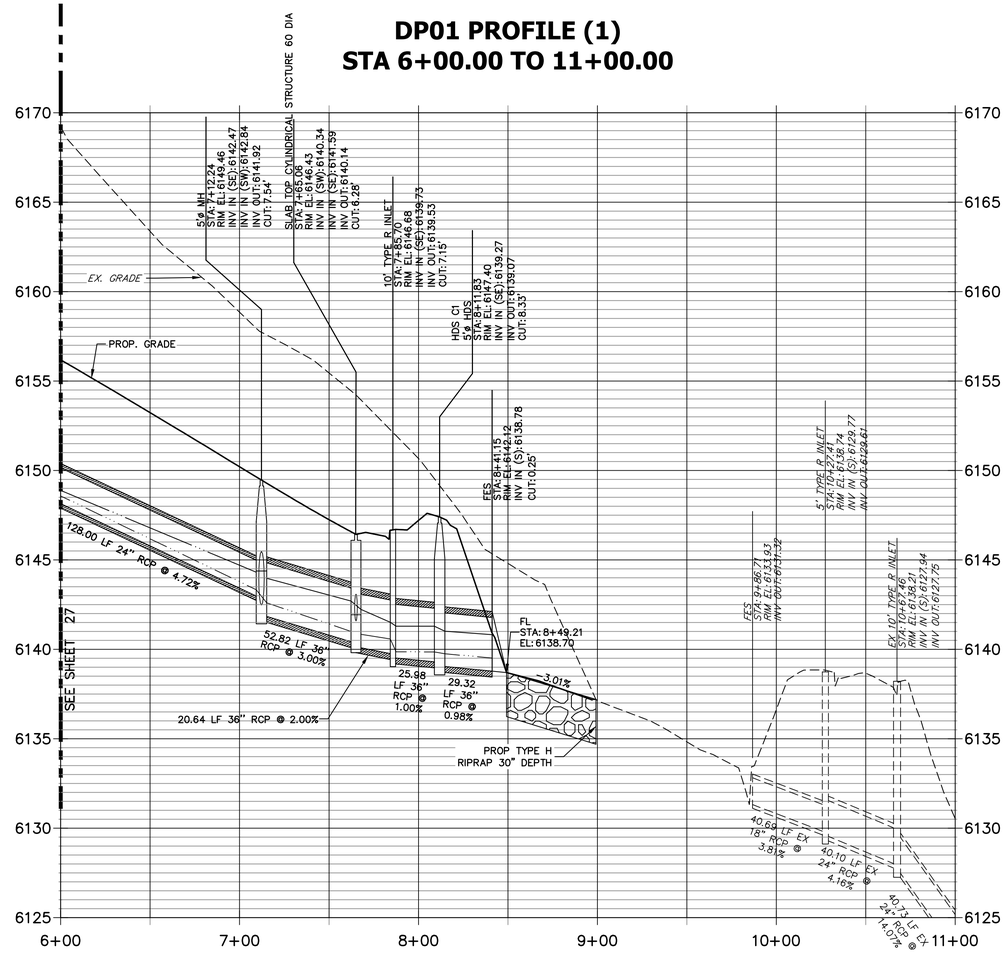

LEGEND

100 YEAR PONDING DEPTH

STORM PROFILE LEGEND
5 YR HGL
100 YR HGL
PROPOSED GRADE
EXISTING GRADE

NOTES

1. SEE SHEET 38 FOR TRM DETAILS.
2. SEE SHEETS 34–41 FOR STORM DETAILS.
3. CONTRACTOR SHALL NOT CROSS HILLCAMP DRIVE BOUNDARY.
4. ANY STORM LINE THAT HAS 10' OR LESS BETWEEN TWO STRUCTURES SHALL UTILIZE CLSM TO BACKFILL TRENCH PIPE UP TO ROAD SUBGRADE.

40 20 0 40 80

HORIZONTAL
ORIGINAL SCALE: 1" = 40'
VERTICAL
ORIGINAL SCALE: 1" = 4'

Know what's **below.**
Call before you dig.

CITY OF LONE TREE

DATE

THESE CONSTRUCTION PLANS HAVE BEEN REVIEWED BY THE CITY OF LONE TREE FOR STREET AND DRAINAGE, SIGNAGE AND STRIPING IMPROVEMENTS ONLY.

ENGINEERING DIVISION ACCEPTANCE BLOCK

ENGINEER'S STATEMENT

PREPARED UNDER MY SUPERVISION

KEVIN ROHRBOUGH, PE
COLORADO P.E. 48992
FOR AND ON BEHALF OF JR ENGINEERING, LLC

DATE

COLORADO REGISTERED PROFESSIONAL ENGINEER KEVIN J. ROHRBOUGH 48992 9/4/26

UNTIL SUCH TIME AS THESE DRAWINGS ARE APPROVED BY THE APPROPRIATE REVIEWING AGENCIES, JR ENGINEERING APPROVES THEIR USE ONLY FOR THE PURPOSES DESIGNATED BY WRITTEN AUTHORIZATION.

PREPARED FOR
RAMPART RANGE METRO DISTRICT
2001 16TH STREET
SUITE 1700
DENVER, CO 80202
PHONE: 303-779-5710

J·R ENGINEERING
A Westrian Company
Centennial 303-740-9393 • Colorado Springs 719-593-2593
Fort Collins 970-491-9888 • www.jrengineering.com

No.	REVISION	BY	DATE
0	FOR APPROVAL	KJR	9/2/26

H-SCALE	1"=40'
V-SCALE	1"=4'
DATE	9/4/26
DESIGNED BY	KAC
DRAWN BY	KAC
CHECKED BY	

HILLCAMP TRAIL

STORM SEWER PLAN AND PROFILE

SHEET 26 OF 80

JOB NO. 15950.18

C:\Users\Crumpk_JR\ENGINEERING\DC\ACCDocs\JR Engineering\15950\12\Project Files\15950\18 Cabela Drive\Drawings\Sheet Drawings\15950\18 Cabela Drive CoLT\15950\18 (DP01).dwg, (DP01), 9/8/2026 2:50:30 PM, crumpk

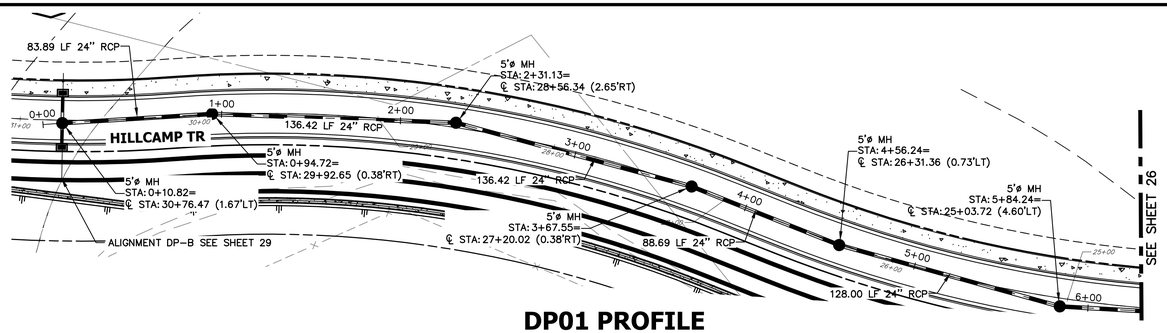

DP01 PROFILE
STA 0+00.00 TO 6+00.00

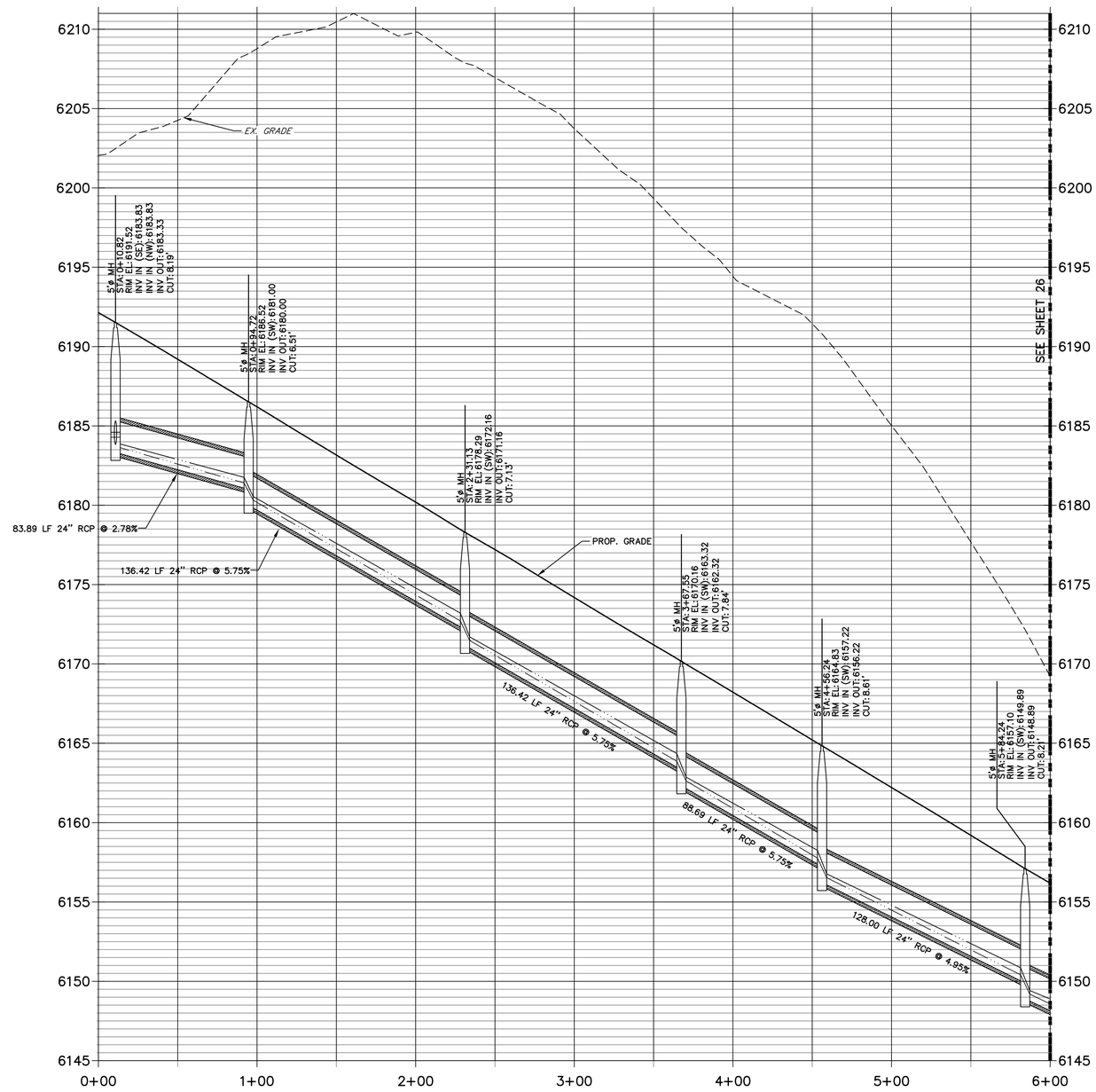

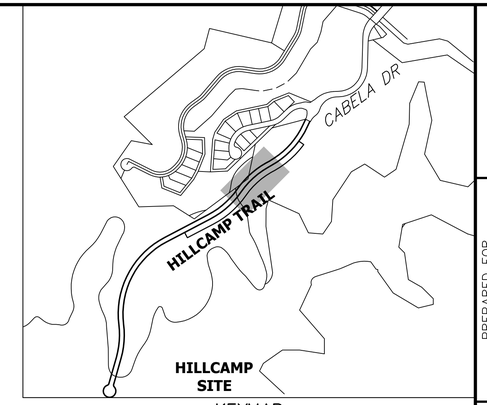

KEYMAP
SCALE: 1" = 600'

LEGEND

100 YEAR PONDING DEPTH

STORM PROFILE LEGEND
- 5 YR HGL
- 100 YR HGL
- PROPOSED GRADE
- EXISTING GRADE

NOTES

1. SEE SHEET 38 FOR TRM DETAILS.
2. SEE SHEETS 34–41 FOR STORM DETAILS.
3. CONTRACTOR SHALL NOT CROSS HILLCAMP DRIVE BOUNDARY.
4. ANY STORM LINE THAT HAS 10' OR LESS BETWEEN TWO STRUCTURES SHALL UTILIZE CLSM TO BACKFILL TRENCH PIPE UP TO ROAD SUBGRADE.

40 20 0 40 80

HORIZONTAL
ORIGINAL SCALE: 1" = 40'
VERTICAL
ORIGINAL SCALE: 1" = 4'

811 Know what's below. Call before you dig.

CITY OF LONE TREE

DATE

THESE CONSTRUCTION PLANS HAVE BEEN REVIEWED BY THE CITY OF LONE TREE FOR STREET AND DRAINAGE, SIGNAGE AND STRIPING IMPROVEMENTS ONLY.

ENGINEERING DIVISION ACCEPTANCE BLOCK

ENGINEER'S STATEMENT

PREPARED UNDER MY SUPERVISION

KEVIN ROHRBOUGH, PE
COLORADO P.E. 48992
FOR AND ON BEHALF OF JR ENGINEERING, LLC

DATE

COLORADO REGISTERED PROFESSIONAL ENGINEER KEVIN S. ROHRBOUGH 48992 9/4/26

UNTIL SUCH TIME AS THESE DRAWINGS ARE APPROVED BY THE APPROPRIATE REVIEWING AGENCIES, JR ENGINEERING APPROVES THEIR USE ONLY FOR THE PURPOSES DESIGNATED BY WRITTEN AUTHORIZATION.

PREPARED FOR
RAMPART RANGE METRO DISTRICT
2001 16TH STREET
SUITE 1700
DENVER, CO 80202
PHONE: 303-779-5710

J·R ENGINEERING
A Westrian Company
Centennial 303-740-9393 • Colorado Springs 719-593-2593
Fort Collins 970-491-9888 • www.jrengineering.com

No.	REVISION	BY	DATE
0	FOR APPROVAL	KJR	9/2/26

H-SCALE	1"=40'
V-SCALE	1"=4'
DATE	9/4/26
DESIGNED BY	KAC
DRAWN BY	KAC
CHECKED BY	

HILLCAMP TRAIL

STORM SEWER PLAN AND PROFILE

SHEET 27 OF 80

JOB NO. 15950.18

C:\Users\Crumpk.JRENGINEERING\DC\ACCDocs\JR Engineering\15950\2\Project Files\15950\18 Cabela Drive\Drawings\Sheet Drawings\15950\18 Cabela Drive ColLT\15950\18 DP01.dwg, DP01 (2), 9/8/2026 2:47:30 PM, crumpk

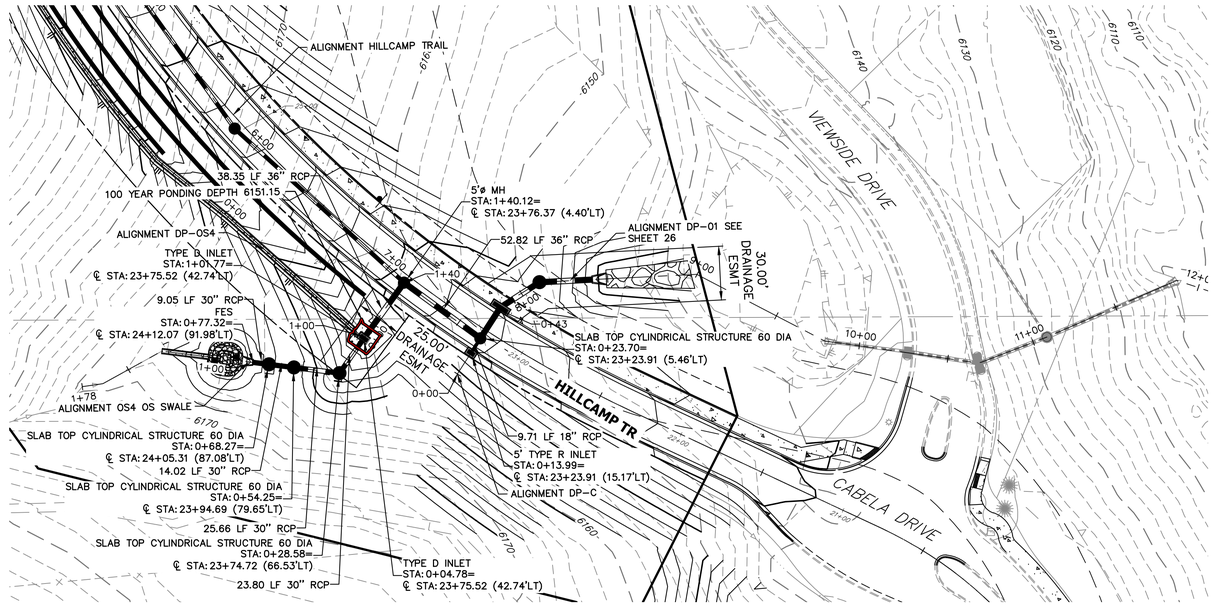

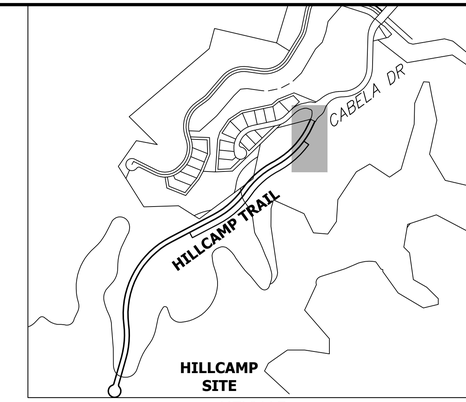

KEYMAP
SCALE: 1" = 600'

UNTIL SUCH TIME AS THESE DRAWINGS ARE APPROVED BY THE APPROPRIATE REVIEWING AGENCIES, JR ENGINEERING APPROVES THEIR USE ONLY FOR THE PURPOSES DESIGNATED BY WRITTEN AUTHORIZATION.

PREPARED FOR
RAMPART RANGE METRO DISTRICT
2001 16TH STREET
SUITE 1700
DENVER, CO 80202
PHONE: 303-779-5710

J·R ENGINEERING
A Westrian Company
Centennial 303-740-9393 • Colorado Springs 719-593-2593
Fort Collins 970-491-9888 • www.jrengineering.com

DP-OS4 PROFILE
STA 0+00.00 TO 1+40.12

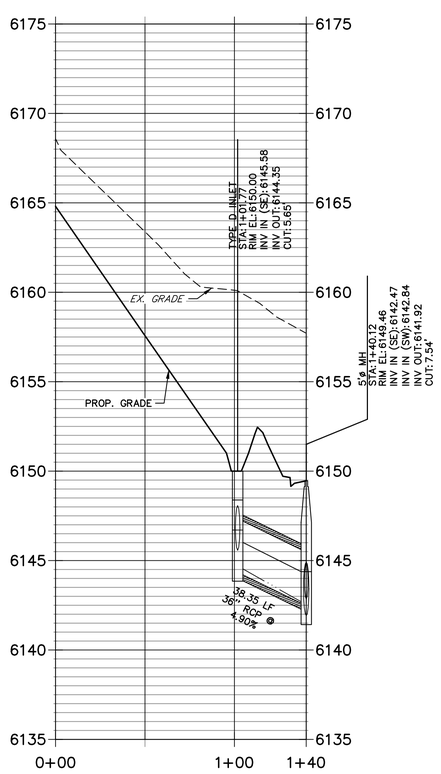

OS4 OS SWALE PROFILE
STA 0+00.00 TO 1+50.00

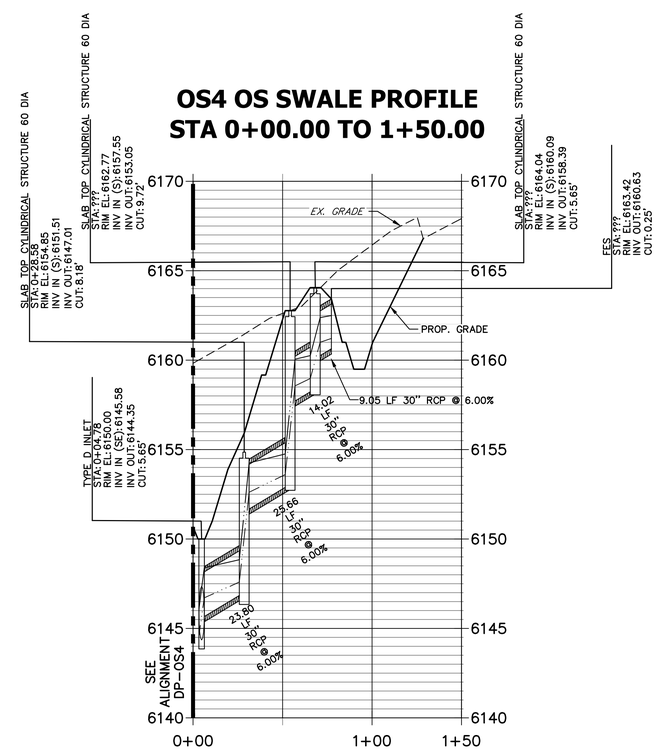

DP-C PROFILE
STA 0+00.00 TO 0+50.00

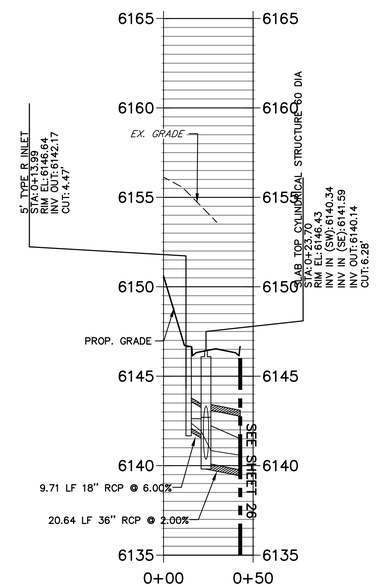

LEGEND

100 YEAR PONDING DEPTH

STORM PROFILE LEGEND
- 5 YR HGL
- 100 YR HGL
- PROPOSED GRADE
- EXISTING GRADE

NOTES

1. SEE SHEET 38 FOR TRM DETAILS.
2. SEE SHEETS 34-41 FOR STORM DETAILS.
3. CONTRACTOR SHALL NOT CROSS HILLCAMP DRIVE BOUNDARY.
4. ANY STORM LINE THAT HAS 10' OR LESS BETWEEN TWO STRUCTURES SHALL UTILIZE CLSM TO BACKFILL TRENCH PIPE UP TO ROAD SUBGRADE.

40 20 0 40 80
HORIZONTAL
ORIGINAL SCALE: 1" = 40'
VERTICAL
ORIGINAL SCALE: 1" = 4'

811
Know what's below.
Call before you dig.

CITY OF LONE TREE

DATE

THESE CONSTRUCTION PLANS HAVE BEEN REVIEWED BY THE CITY OF LONE TREE FOR STREET AND DRAINAGE, SIGNAGE AND STRIPING IMPROVEMENTS ONLY.

ENGINEERING DIVISION ACCEPTANCE BLOCK

ENGINEER'S STATEMENT

PREPARED UNDER MY SUPERVISION

KEVIN ROHRBOUGH, PE
COLORADO P.E. 48992
FOR AND ON BEHALF OF JR ENGINEERING, LLC

DATE

COLORADO REGISTERED PROFESSIONAL ENGINEER KEVIN J. ROHRBOUGH 48992 9/4/26

No.	REVISION	BY	DATE
0	FOR APPROVAL	KJR	9/2/26

H-SCALE	1"=40'
V-SCALE	1"=4'
DATE	9/4/26
DESIGNED BY	KAC
DRAWN BY	KAC
CHECKED BY	

HILLCAMP TRAIL

STORM SEWER PLAN AND PROFILE

SHEET 28 OF 80

JOB NO. 15950.18

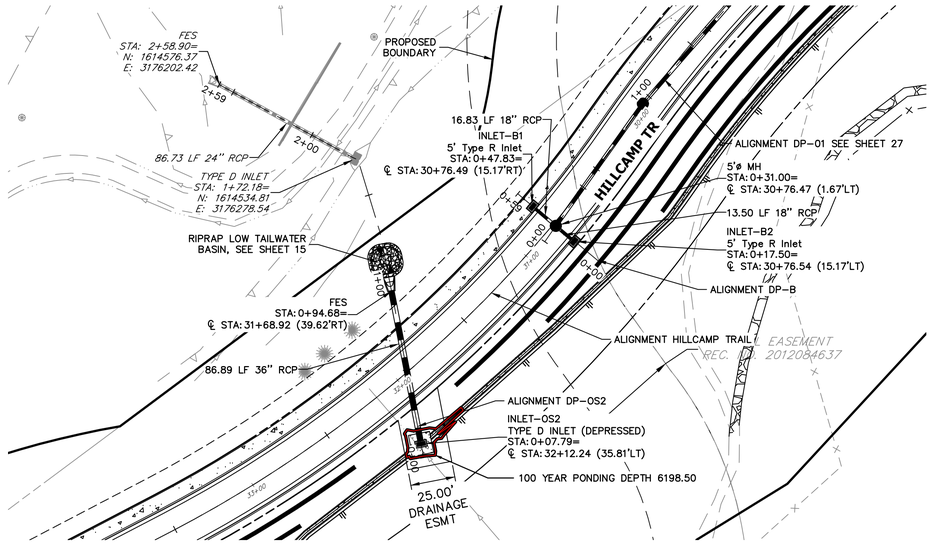

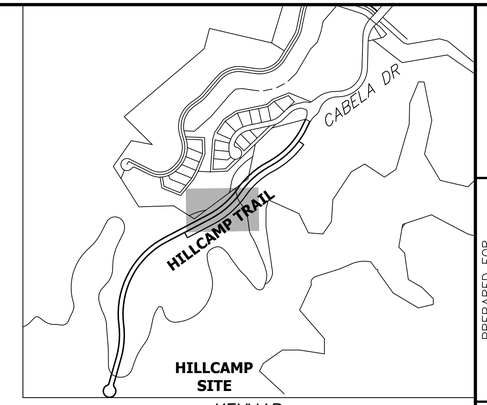

KEYMAP
SCALE: 1" = 600'

DP-B PROFILE
STA 0+00.00 TO 0+58.87

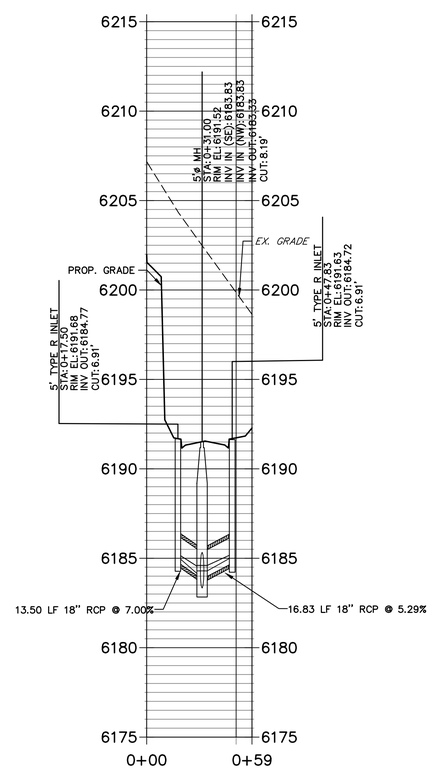

DP-OS2 PROFILE
STA 0+00.00 TO 1+50.00

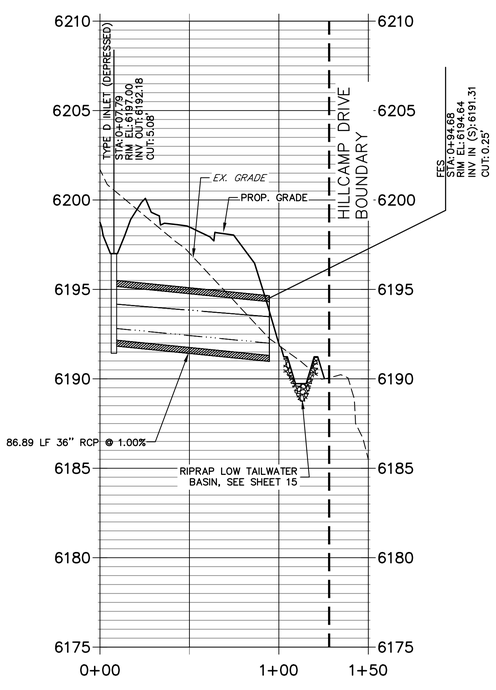

LEGEND

100 YEAR PONDING DEPTH

STORM PROFILE LEGEND
5 YR HGL
100 YR HGL
PROPOSED GRADE
EXISTING GRADE

NOTES

1. SEE SHEET 38 FOR TRM DETAILS.
2. SEE SHEETS 34–41 FOR STORM DETAILS.
3. CONTRACTOR SHALL NOT CROSS HILLCAMP DRIVE BOUNDARY.
4. ANY STORM LINE THAT HAS 10' OR LESS BETWEEN TWO STRUCTURES SHALL UTILIZE CLSM TO BACKFILL TRENCH PIPE UP TO ROAD SUBGRADE.

40 20 0 40 80

HORIZONTAL
ORIGINAL SCALE: 1" = 40'
VERTICAL
ORIGINAL SCALE: 1" = 4'

Know what's **below.**
Call before you dig.

CITY OF LONE TREE

DATE

THESE CONSTRUCTION PLANS HAVE BEEN REVIEWED BY THE CITY OF LONE TREE FOR STREET AND DRAINAGE, SIGNAGE AND STRIPING IMPROVEMENTS ONLY.

ENGINEERING DIVISION ACCEPTANCE BLOCK

ENGINEER'S STATEMENT

PREPARED UNDER MY SUPERVISION

KEVIN ROHRBOUGH, PE — DATE
COLORADO P.E. 48992
FOR AND ON BEHALF OF JR ENGINEERING, LLC

COLORADO REGISTERED PROFESSIONAL ENGINEER KEVIN J. ROHRBOUGH 48992 9/4/26

UNTIL SUCH TIME AS THESE DRAWINGS ARE APPROVED BY THE APPROPRIATE REVIEWING AGENCIES, JR ENGINEERING APPROVES THEIR USE ONLY FOR THE PURPOSES DESIGNATED BY WRITTEN AUTHORIZATION.

PREPARED FOR
RAMPART RANGE METRO DISTRICT
2001 16TH STREET
SUITE 1700
DENVER, CO 80202
PHONE: 303-779-5710

J·R ENGINEERING
A Westrian Company
Centennial 303-740-9393 • Colorado Springs 719-593-2593
Fort Collins 970-491-9888 • www.jrengineering.com

No.	REVISION	BY	DATE
0	FOR APPROVAL	KJR	9/2/26

H-SCALE	1"=40'
V-SCALE	1"=4'
DATE	9/4/26
DESIGNED BY	KAC
DRAWN BY	KAC
CHECKED BY	

HILLCAMP TRAIL

STORM SEWER PLAN AND PROFILE

SHEET 29 OF 80

JOB NO. 15950.18

C:\Users\CrumpK.JRENGINEERING\DC\ACCDocs\JR Engineering\15950.12\Project Files\15950.18 Cabela Drive\Drawings\Sheet Drawings\15950.18 Cabela Drive Col_T\15950.18 DP01.dwg, DP03, 9/8/2026 2:48:37 PM, crumpk

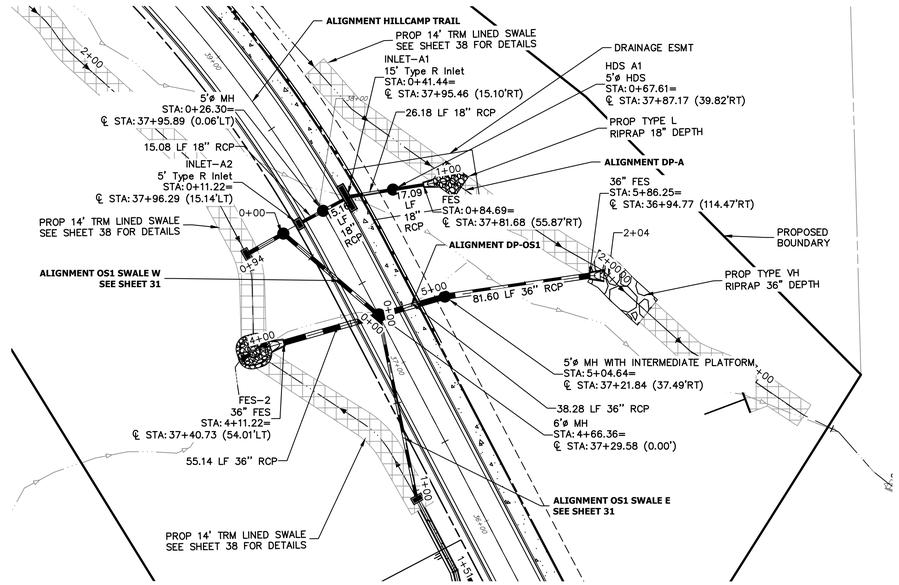

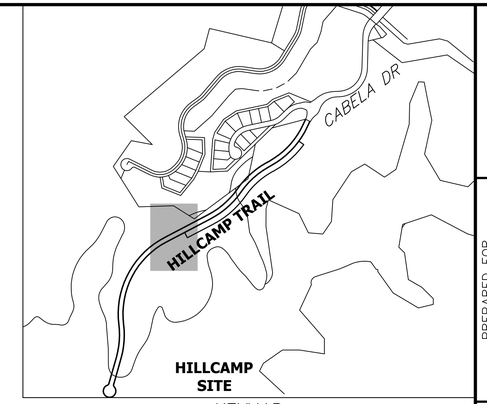

KEYMAP
SCALE: 1" = 600'

OS1 PROFILE
STA 3+00.00 TO 6+50.00

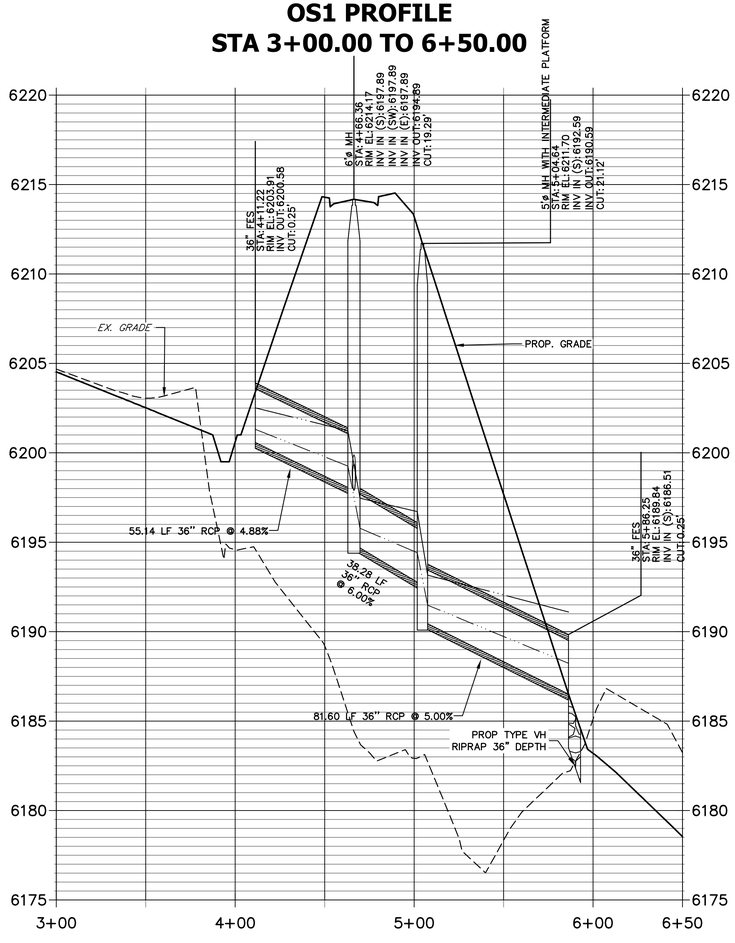

DP-A PROFILE
STA 0+00.00 TO 2+03.65

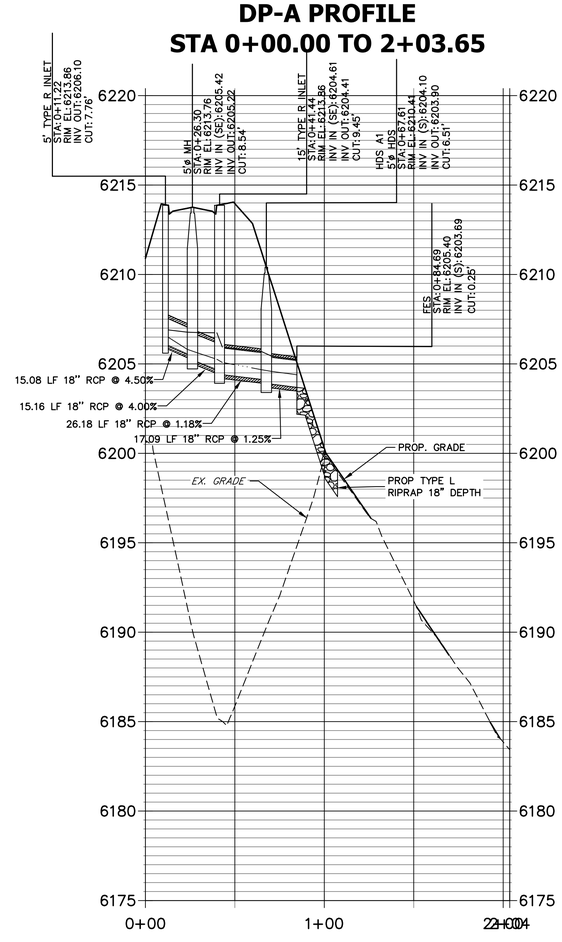

LEGEND

100 YEAR PONDING DEPTH

STORM PROFILE LEGEND
5 YR HGL
100 YR HGL
PROPOSED GRADE
EXISTING GRADE

NOTES

1. SEE SHEET 38 FOR TRM DETAILS.
2. SEE SHEETS 34–41 FOR STORM DETAILS.
3. CONTRACTOR SHALL NOT CROSS HILLCAMP DRIVE BOUNDARY.
4. ANY STORM LINE THAT HAS 10' OR LESS BETWEEN TWO STRUCTURES SHALL UTILIZE CLSM TO BACKFILL TRENCH PIPE UP TO ROAD SUBGRADE.

40 20 0 40 80

HORIZONTAL
ORIGINAL SCALE: 1" = 40'
VERTICAL
ORIGINAL SCALE: 1" = 4'

CITY OF LONE TREE

DATE

THESE CONSTRUCTION PLANS HAVE BEEN REVIEWED BY THE CITY OF LONE TREE FOR STREET AND DRAINAGE, SIGNAGE AND STRIPING IMPROVEMENTS ONLY.

ENGINEERING DIVISION ACCEPTANCE BLOCK

811 Know what's below. Call before you dig.

ENGINEER'S STATEMENT

PREPARED UNDER MY SUPERVISION

KEVIN J. ROHRBOUGH 48992 9/4/26

KEVIN ROHRBOUGH, PE — DATE
COLORADO P.E. 48992
FOR AND ON BEHALF OF JR ENGINEERING, LLC

UNTIL SUCH TIME AS THESE DRAWINGS ARE APPROVED BY THE APPROPRIATE REVIEWING AGENCIES, JR ENGINEERING APPROVES THEIR USE ONLY FOR THE PURPOSES DESIGNATED BY WRITTEN AUTHORIZATION.

PREPARED FOR
RAMPART RANGE METRO DISTRICT
2001 16TH STREET
SUITE 1700
DENVER, CO 80202
PHONE: 303-779-5710

J·R ENGINEERING
A Westrian Company
Centennial 303-740-9393 • Colorado Springs 719-593-2593
Fort Collins 970-491-9888 • www.jrengineering.com

No.	REVISION	BY	DATE
0	FOR APPROVAL	KJR	9/2/26

H-SCALE	1"=40'
V-SCALE	1"=4'
DATE	9/4/26
DESIGNED BY	KAC
DRAWN BY	KAC
CHECKED BY	

HILLCAMP TRAIL

STORM SEWER PLAN AND PROFILE

SHEET 30 OF 80

JOB NO. 15950.18

C:\Users\CrumpK.JRENGINEERING\DC\ACCDocs\JR Engineering\15950112\Project Files\15950018 Cabela Drive\Drawings\Sheet Drawings\5950018 Cabela Drive CoLT\15950018 DP01.dwg, DP04, 9/8/2026 2:48:50 PM, crumpk

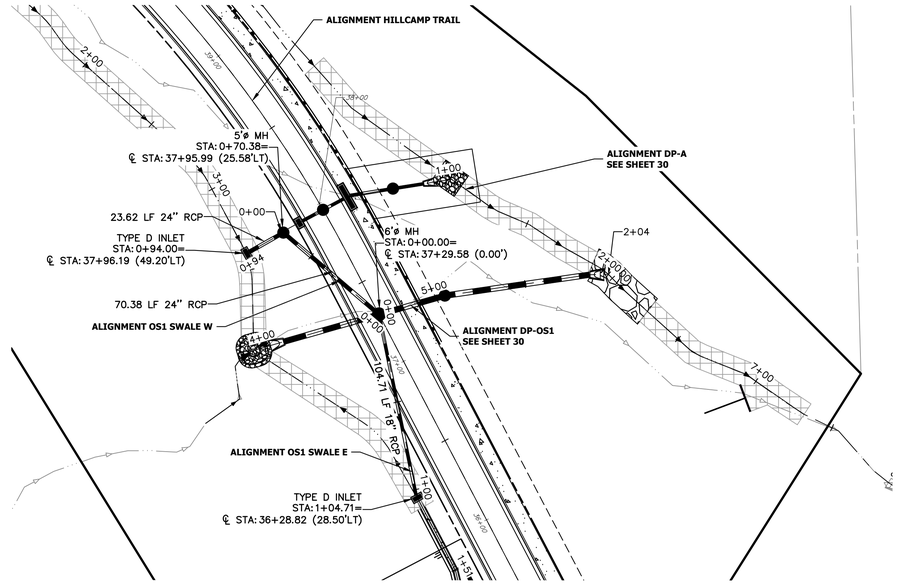

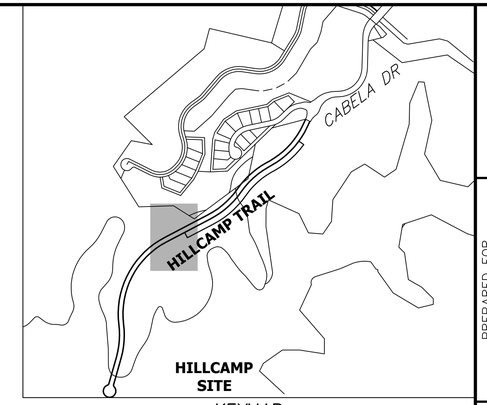

KEYMAP
SCALE: 1" = 600'

OS1 SWALE W PROFILE
STA -0+50.00 TO 1+00.00

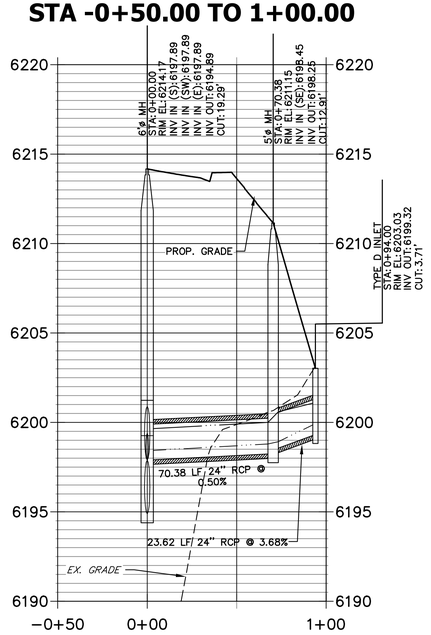

OS1 SWALE E PROFILE
STA 0+00.00 TO 1+50.62

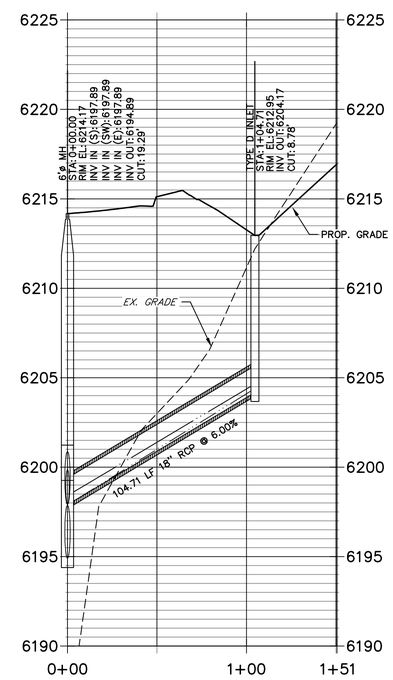

LEGEND

100 YEAR PONDING DEPTH

STORM PROFILE LEGEND
5 YR HGL
100 YR HGL
PROPOSED GRADE
EXISTING GRADE

NOTES

1. SEE SHEET 38 FOR TRM DETAILS.
2. SEE SHEETS 34–41 FOR STORM DETAILS.
3. CONTRACTOR SHALL NOT CROSS HILLCAMP DRIVE BOUNDARY.
4. ANY STORM LINE THAT HAS 10' OR LESS BETWEEN TWO STRUCTURES SHALL UTILIZE CLSM TO BACKFILL TRENCH PIPE UP TO ROAD SUBGRADE.

40 20 0 40 80

HORIZONTAL
ORIGINAL SCALE: 1" = 40'
VERTICAL
ORIGINAL SCALE: 1" = 4'

CITY OF LONE TREE

DATE

THESE CONSTRUCTION PLANS HAVE BEEN REVIEWED BY THE CITY OF LONE TREE FOR STREET AND DRAINAGE, SIGNAGE AND STRIPING IMPROVEMENTS ONLY.

ENGINEERING DIVISION ACCEPTANCE BLOCK

Know what's **below.**
Call before you dig.

ENGINEER'S STATEMENT

PREPARED UNDER MY SUPERVISION

KEVIN J. ROHRBOUGH
COLORADO REGISTERED
48992
9/4/26
PROFESSIONAL ENGINEER

KEVIN ROHRBOUGH, PE
COLORADO P.E. 48992
FOR AND ON BEHALF OF JR ENGINEERING, LLC

DATE

UNTIL SUCH TIME AS THESE DRAWINGS ARE APPROVED BY THE APPROPRIATE REVIEWING AGENCIES, JR ENGINEERING APPROVES THEIR USE ONLY FOR THE PURPOSES DESIGNATED BY WRITTEN AUTHORIZATION.

PREPARED FOR
RAMPART RANGE METRO DISTRICT
2001 16TH STREET
SUITE 1700
DENVER, CO 80202
PHONE: 303-779-5710

J·R ENGINEERING
A Westrian Company
Centennial 303-740-9393 • Colorado Springs 719-593-2593
Fort Collins 970-491-9888 • www.jrengineering.com

No.	REVISION	BY	DATE
0	FOR APPROVAL	KJR	9/2/26

H-SCALE	1"=40'
V-SCALE	1"=4'
DATE	9/4/26
DESIGNED BY	KAC
DRAWN BY	KAC
CHECKED BY	

HILLCAMP TRAIL

STORM SEWER PLAN AND PROFILE

SHEET 31 OF 80

JOB NO. 15950.18

C:\Users\Crumpk_JRENGINEERING\DC\ACCDocs\JR Engineering\15950\2\Project Files\15950\18 Cabela Drive\Drawings\Sheet Drawings\15950\18 Cabela Drive CoLT\15950\18 (DP01).dwg, DP05, 9/8/2026 2:51:10 PM, crumpk

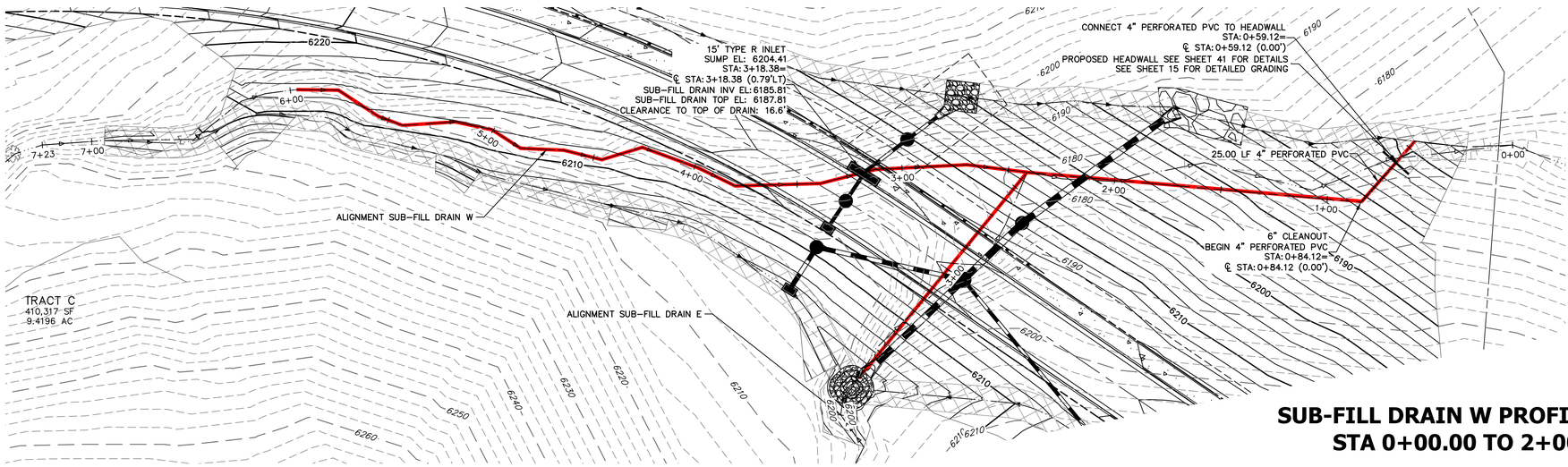

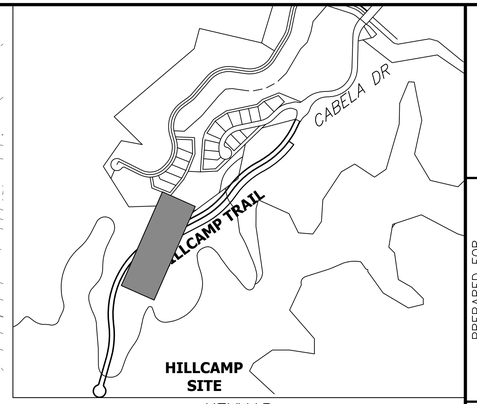

KEYMAP
SCALE: 1" = 600'

SUB-FILL DRAIN W PROFILE CONT. STA 0+00.00 TO 2+00.00

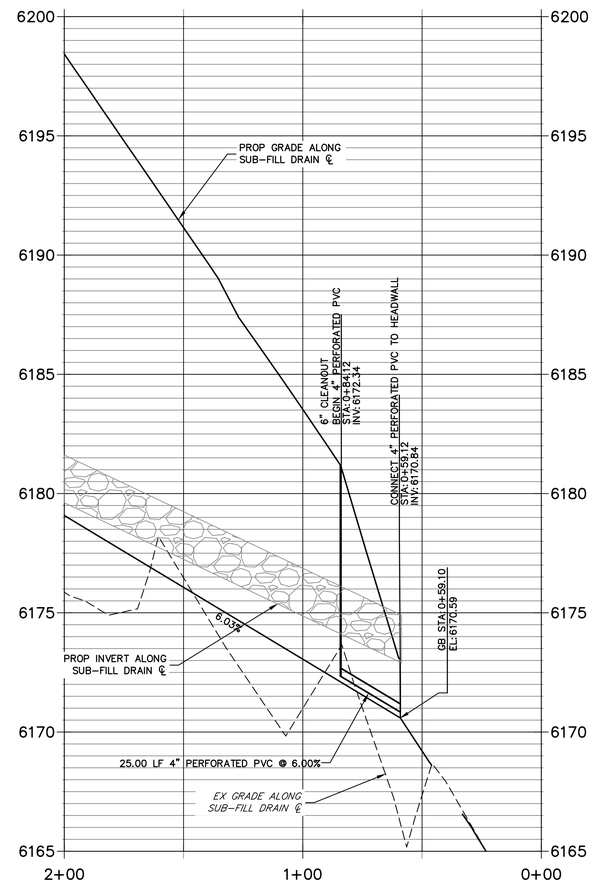

SUB-FILL DRAIN W PROFILE STA 2+00.00 TO 7+23.00

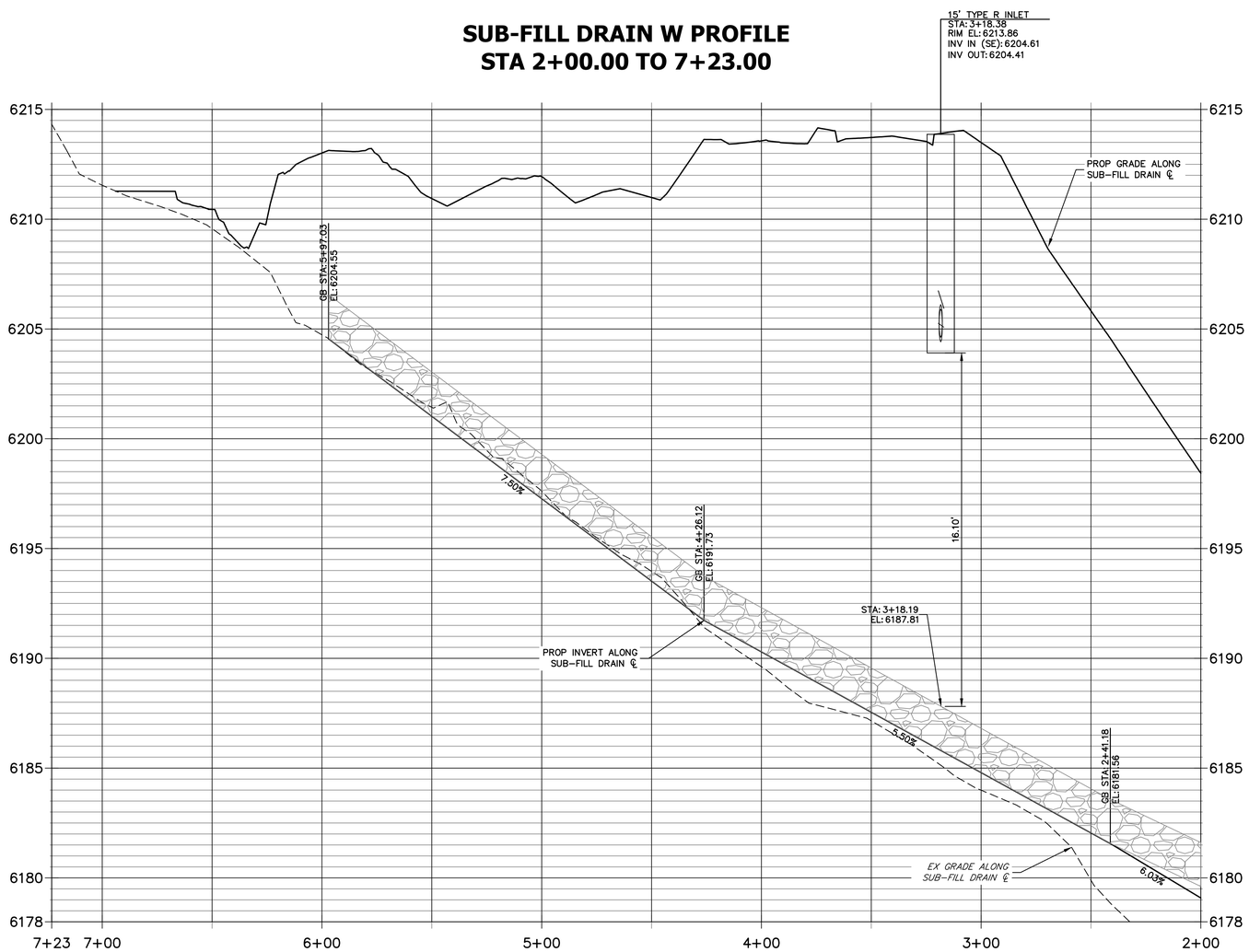

NOTES:

1. SUB-FILL DRAIN AND ALL APPURTENANCES SHALL BE CONSTRUCTED IN ACCORDANCE WITH GEOTECHNICAL RECOMMENDATIONS.
2. ANY CONFLICTING INFORMATION IN THE GEOTECHNICAL REPORT SUPERCEDES ANYTHING IN THE SUB-FILL DRAIN PLANS.
3. SEE SHEET 41 FOR PERFORATED PIPE AND SUB-FILL DRAIN DETAILS

ENGINEER'S STATEMENT

PREPARED UNDER MY SUPERVISION

KEVIN ROHRBOUGH, PE
COLORADO P.E. 48992
FOR AND ON BEHALF OF JR ENGINEERING, LLC

DATE

COLORADO REGISTERED PROFESSIONAL ENGINEER KEVIN J. ROHRBOUGH 48992 9/4/26

30 15 0 30 60
HORIZONTAL
ORIGINAL SCALE: 1" = 30'
VERTICAL
ORIGINAL SCALE: 1" = 3'

811 Know what's below. Call before you dig.

UNTIL SUCH TIME AS THESE DRAWINGS ARE APPROVED BY THE APPROPRIATE REVIEWING AGENCIES, JR ENGINEERING APPROVES THEIR USE ONLY FOR THE PURPOSES DESIGNATED BY WRITTEN AUTHORIZATION.

PREPARED FOR
RAMPART RANGE METRO DISTRICT
2001 16TH STREET
SUITE 1700
DENVER, CO 80202
PHONE: 303-779-5710

J·R ENGINEERING
A Westrian Company
Centennial 303-740-9393 • Colorado Springs 719-593-2593
Fort Collins 970-491-9888 • www.jrengineering.com

No.	REVISION	BY	DATE

H-SCALE	1" = 30'
V-SCALE	1" = 3'
DATE	9/4/26
DESIGNED BY	BMP
DRAWN BY	KJR
CHECKED BY	

HILLCAMP TRAIL

SUB-FILL DRAIN PLAN AND PROFILE

SHEET 32 OF 80

JOB NO. 15950.18

C:\Users\Crumpk_JRENGINEERING\DC\ACCDocs\JR Engineering\15950\12\Project Files\15950\18 Cabela Drive\Drawings\Sheet Drawings\15950\18 Cabela Drive CoL\T\15950\18 DP02 - Sub Fill.dwg, DP05, 9/8/2026 2:46:38 PM, crumpk

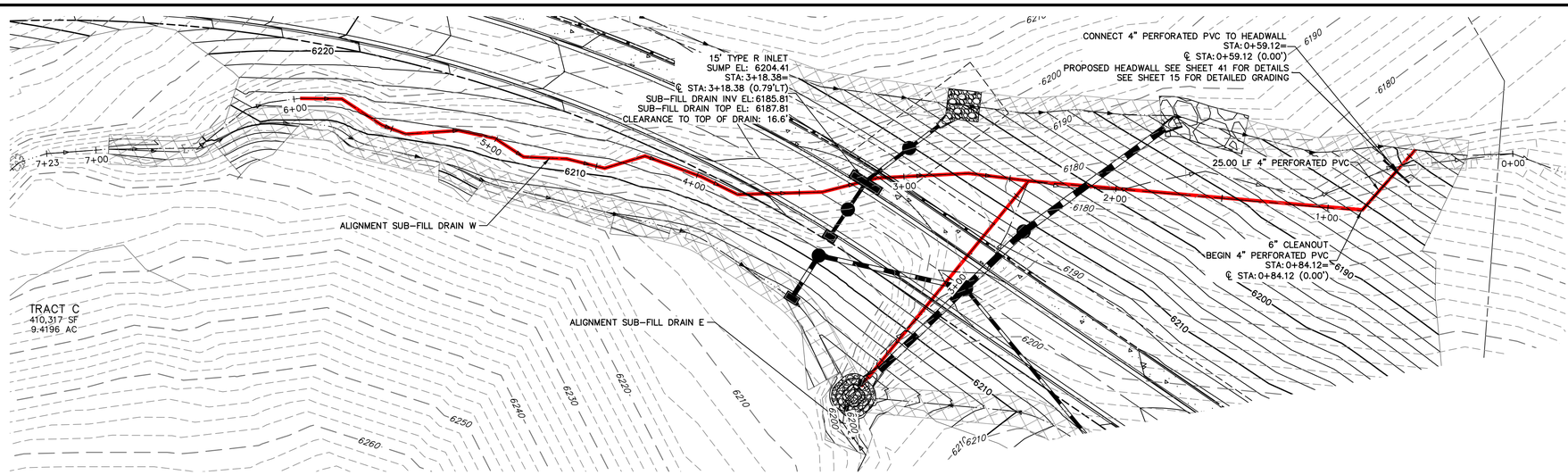

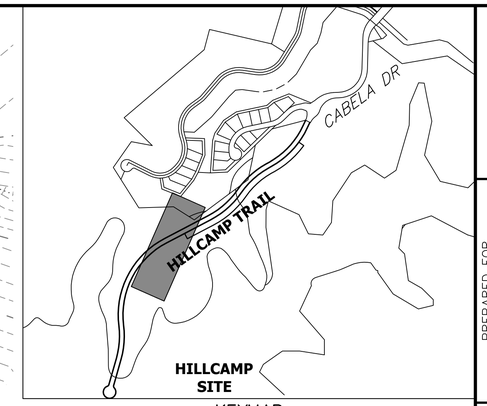

KEYMAP
SCALE: 1" = 600'

NOTES:

1. SUB-FILL DRAIN AND ALL APPURTENANCES SHALL BE CONSTRUCTED IN ACCORDANCE WITH GEOTECHNICAL RECOMMENDATIONS.
2. ANY CONFLICTING INFORMATION IN THE GEOTECHNICAL REPORT SUPERCEDES ANYTHING IN THE SUB-FILL DRAIN PLANS.
3. SEE SHEET 41 FOR PERFORATED PIPE AND SUB-FILL DRAIN DETAILS

SUB-FILL DRAIN E PROFILE
STA 2+41.00 TO 3+86.15

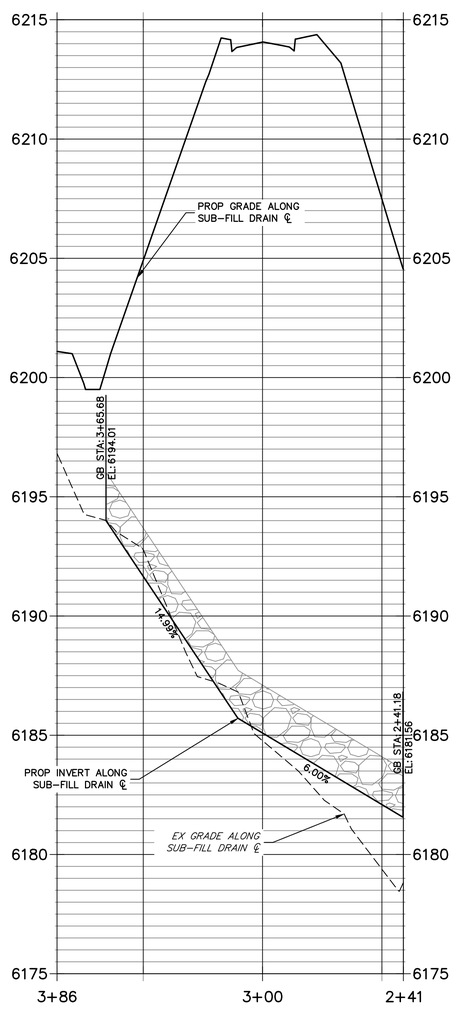

30 15 0 30 60
HORIZONTAL
ORIGINAL SCALE: 1" = 30'
VERTICAL
ORIGINAL SCALE: 1" = 3'

Know what's below.
Call before you dig.

ENGINEER'S STATEMENT

PREPARED UNDER MY SUPERVISION

KEVIN ROHRBOUGH, PE
COLORADO P.E. 48992
FOR AND ON BEHALF OF JR ENGINEERING, LLC

DATE

COLORADO REGISTERED PROFESSIONAL ENGINEER KEVIN J. ROHRBOUGH 48992 9/4/26

UNTIL SUCH TIME AS THESE DRAWINGS ARE APPROVED BY THE APPROPRIATE REVIEWING AGENCIES, JR ENGINEERING APPROVES THEIR USE ONLY FOR THE PURPOSES DESIGNATED BY WRITTEN AUTHORIZATION.

PREPARED FOR
RAMPART RANGE METRO DISTRICT
2001 16TH STREET
SUITE 1700
DENVER, CO 80202
PHONE: 303-779-5710

J·R ENGINEERING
A Westrian Company
Centennial 303-740-9393 • Colorado Springs 719-593-2593
Fort Collins 970-491-9888 • www.jrengineering.com

No.	REVISION	BY	DATE

H-SCALE	1"=30'
V-SCALE	1"=3'
DATE	9/4/26
DESIGNED BY	BMP
DRAWN BY	KJR
CHECKED BY	

HILLCAMP TRAIL

SUB-FILL DRAIN PLAN AND PROFILE

SHEET 33 OF 80

JOB NO. 15950.18

C:\Users\CrumpK.JRENGINEERING\DC\ACCDocs\JR Engineering\15950\12\Project Files\15950\18 Cabela Drive\Drawings\Sheet Drawings\15950\18 Cabela Drive CoLT\15950\18 DP02 - Sub Fill.dwg, DP06, 9/8/2026 2:48:41 PM, crumpk

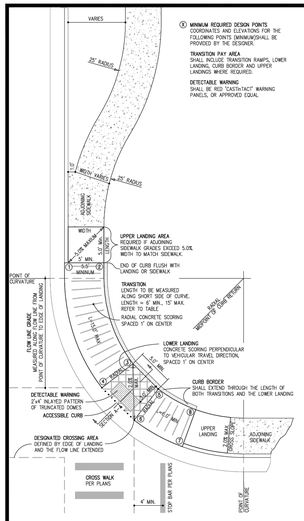

MINIMUM REQUIRED DESIGN POINTS
COORDINATES AND ELEVATIONS FOR THE FOLLOWING POINTS (MINIMUM) SHALL BE PROVIDED BY THE DESIGNER.

TRANSITION PAY AREA
INCLUDES TRANSITION RAMPS, LOWER LANDING, CURB BORDER AND UPPER LANDINGS WHERE REQUIRED.

DETECTABLE WARNING
SHALL BE RED "CASTHATCH" WARNING PANELS, OR APPROVED EQUAL.

NOTES

SLOPED TRANSITIONS SHALL COMPLY WITH ALL APPLICABLE RULES AND GUIDELINES OF THE AMERICANS WITH DISABILITES ACT.

SLOPED TRANSITIONS SHALL BE CONSISTENT WITH THE CURRENT PUBLICATION OF FEDERAL GUIDELINES FOR ACCESSIBLE RIGHTS OF WAY.

LONGITUDINAL SLOPES WITHIN THE TRANSITION SHALL NOT EXCEED 1:12 (8.33%).

CROSS SLOPES, OR SLOPES PERPENDICULAR TO THE DIRECTION OF TRAVEL SHALL NOT EXCEED 1:50 (2.0%)

THE LOWER LANDING AREA IS A REQUIRED ELEMENT.

SLOPED TRANSITIONS ARE A REQUIRED ELEMENT AND SHALL:
- A. NOT EXCEED 1:12 (8.0%) LONGITUDINAL SLOPE ALONG THE SHORTEST SIDE UNLESS TRANSITION LENGTH EXCEEDS 15.0'.
- B. NOT EXCEED 1:50 (2.0%) SLOPE PERPENDICULAR TO THE TRAVELED DIRECTION.
- C. NOT EXCEED 15.0' IN LENGTH AS MEASURED ALONG THE SHORTEST SIDE. MAXIMUM LONGITUDINAL SLOPE SHALL BE ADJUSTED TO ACCOMODATE THE LENGTH.
- D. NOT BE LESS THAN 6.0' IN LENGTH.

THE UPPER LANDING AREA IS REQUIRED IF:
- A. THE ADJOINING SIDEWALK HAS A LONGITUDINAL GRADE (DIRECTION OF TRAVEL) IN EXCESS OF 1:20 (5.0%). SAID LANDING SHALL NOT EXCEED A 1:20 (5.0%) SLOPE IN ANY DIRECTION.
- B. A CHANGE IN DIRECTION IS REQUIRED TO ENTER OF EXIT THE SLOPED TRANSITION. SAID LANDING SHALL SHALL NOT EXCEED 1:50 (2.0%) SLOPE IN ANY DIRECTION.

LANDINGS AND SLOPED TRANSITIONS SHALL MATCH THE WIDTH OF THE ADJOINING SIDEWALK, 3.0' MINIMUM.

ALL TOOLED JOINTS WITHIN THE SLOPED TRANSITIONS SHALL RUN PERPENDICULAR TO THE DIRECTION OF TRAVEL.

ALL TOOLED JOINTS WITHIN THE LOWER LANDING AREA SHALL RUN PARALLEL TO AND/OR PERPENDICULAR TO THE DIRECTION OF VEHICULAR TRAVEL WITHIN THE TRAVELED WAY.

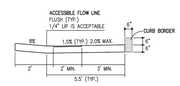

SECTION A-A

TOOLED JOINT

CITY OF LONE TREE
Department of Public Works

CURB TRANSITION

SCALE: NTS | DETAIL 1
DATE: 3/05

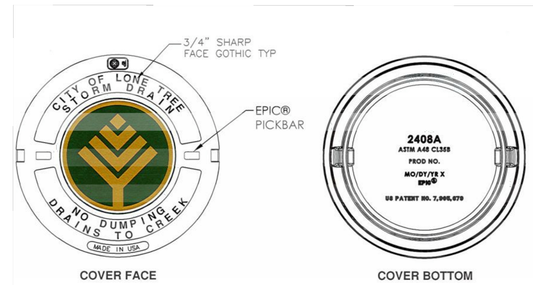

COVER FACE

COVER BOTTOM

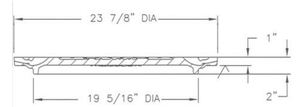

SECTION

Design Features
- -Materials
  Gray Iron (CL35B)
- -Load Rating
  Heavy Duty
- -Open Area
  n/a
- -Coating
  Undipped
- -√ Designates Machined Surface

CITY OF LONE TREE PUBLIC WORKS

MANHOLE LID COVER

DATE: 06/05/2020 | BY: J. KRELL | DRAWING NO.:

DETAIL NUMBER MH-1

42"w x 9"h
.080 aluminum
3/4" radius corners
3/8" border
high intensity prismatic
6" logo
6" Futura Condensed name
3" Futura Condensed suffix
Pantone 342
double-sided

60"w x 12"h
.080 aluminum
1½" radius corners
1/2" border
high intensity prismatic
8" logo
8" Futura Condensed name
4" Futura Condensed suffix
Pantone 342
double-sided

INTERSECTION STREET NAME SIGNAGE NOTES

1. ALL TRAFFIC CONTROL DEVICES SHALL CONFORM TO THE MOST RECENT VERSION OF THE FEDERAL MANUAL ON UNIFORM TRAFFIC CONTROL DEVICES (MUTCD), THE "COLORADO SUPPLEMENTAL MUTCD" AND THE DOUGLAS COUNTY "ROAD AND CONSTRUCTION STANDARDS MANUAL". FURTHER SPECIFICATIONS AND ILLUSTRATIONS ARE LOCATED IN THE COLORADO DIVISION OF HIGHWAYS "M AND S STANDARDS".
2. DELINEATION OF ROADWAYS SHALL BE AS SPECIFIED IN THE COLORADO "M AND S MANUAL".
3. STREET NAME SIGNS SHALL BE MOUNTED SO THAT THEY CAN BE SEEN FROM ALL DIRECTIONS OF TRAVEL.
4. INSTALLATION OF SIGNS SHALL CONFORM TO THE MUTCD MOUNTING HEIGHT REQUIREMENTS, INCLUDING A 7-FOOT MINIMUM HEIGHT FROM THE BOTTOM OF THE LOWEST SIGN PANEL TO THE TOP GRADE OF SIDEWALK.
5. ALL NEWLY INSTALLED TRAFFIC SIGNS SHALL MEET THE MINIMUM RETRO-REFLECTIVITY AND ILLUMINATION STANDARDS AS SET FORTH BY THE MUTCD (LATEST EDITION). THESE MINIMUM REQUIREMENTS SHALL FALL UNDER THE REQUIREMENTS OF THE TWO (2) YEAR WARRANTY PERIOD FOR NEW CONSTRUCTION.
6. NON ILLUMINATED SIGNS SHALL BE USED AT MAJOR/MAJOR AND MAJOR/ARTERIAL INTERSECTIONS. THEY SHALL BE MOUNTED TO THE SIGNAL POLE WITH ASTRO-BRACS ACCORDING TO MANUFACTURER'S SPECIFICATIONS.
7. THE CONTRACTOR INSTALLING SIGNS IS RESPONSIBLE FOR LOCATING AND PROTECTING ALL UNDERGROUND UTILITIES. LONE TREE PUBLIC WORKS SHALL BE CONTACTED A MINIMUM OF 72 HOURS PRIOR TO INSTALLATION AT 303-662-8112.
8. FOLLOWING INSTALLATION, THE CONTRACTOR SHALL NOTIFY THE CITY OF LONE TREE PUBLIC WORKS DEPARTMENT, 303-662-8112. A FIELD INSPECTION OF LOCATION AND INSTALLATION OF ALL SIGNS SHALL BE PERFORMED BY PUBLIC WORKS. ALL DISCREPANCIES IDENTIFIED DURING THE FIELD INSPECTION MUST BE CORRECTED BEFORE THE TWO-YEAR WARRANTY PERIOD WILL BEGIN.
9. SIGNAGE AND STRIPING HAS BEEN DETERMINED BY INFORMATION AVAILABLE AT THE TIME OF REVIEW. PRIOR TO INITIATION OF THE WARRANTY PERIOD, LONE TREE RESERVES THE RIGHT TO REQUIRE MODIFICATIONS TO EXISTING OR INSTALLATION OF ADDITIONAL SIGNAGE AND/OR STRIPING IF THEY DETERMINE THAT AN UNFORESEEN CONDITION WARRANTS SUCH MODIFICATION ACCORDING TO THE MUTCD OR THE CDOT M AND S STANDARDS. ALL SIGNAGE AND STRIPING SHALL FALL UNDER THE REQUIREMENTS OF THE TWO (2) YEAR WARRANTY PERIOD FOR NEW CONSTRUCTION.
10. ANY INTERSECTION STREET NAME SIGNAGE REMOVED SHALL BE RETURNED TO THE CITY OF LONE TREE.

CITY OF LONE TREE PUBLIC WORKS

INTERSECTION STREET NAME SIGNAGE

DATE: 04/19/12 | BY: GRW | DRAWING NO.: SN-02

SHEET 2 OF 3

Know what's **below.**
Call before you dig.

CITY OF LONE TREE

DATE

THESE CONSTRUCTION PLANS HAVE BEEN REVIEWED BY THE CITY OF LONE TREE FOR STREET AND DRAINAGE, SIGNAGE AND STRIPING IMPROVEMENTS ONLY.

ENGINEERING DIVISION ACCEPTANCE BLOCK

ENGINEER'S STATEMENT
PREPARED UNDER MY SUPERVISION

COLORADO REGISTERED KEVIN S. ROHRBOUGH 48992 9/4/26 PROFESSIONAL ENGINEER

KEVIN ROHRBOUGH, PE
COLORADO P.E. 48992
FOR AND ON BEHALF OF JR ENGINEERING, LLC

DATE

UNTIL SUCH TIME AS THESE DOCUMENTS ARE APPROVED BY THE APPROPRIATE REVIEWING AGENCIES, JR ENGINEERING APPROVES THEIR USE ONLY FOR THE PURPOSES DESIGNATED BY WRITTEN AUTHORIZATION.

PREPARED FOR
RAMPART RANGE METRO DISTRICT
2001 16TH STREET
SUITE 1700
DENVER, CO 80202
PHONE: 303-779-5710

J·R ENGINEERING
A Westrian Company
Centennial 303-740-9393 • Colorado Springs 719-593-2593
Fort Collins 970-491-9888 • www.jrengineering.com

No.	REVISION	BY	DATE
0	FOR APPROVAL	KJR	9/2/26

H-SCALE	N/A
V-SCALE	N/A
DATE	9/4/26
DESIGNED BY	N/A
DRAWN BY	KAC
CHECKED BY	

HILLCAMP TRAIL

STORM SEWER & ROADWAY DETAILS

SHEET 34 OF 80

JOB NO. 15950.18

STANDARD SIGN BORDER SPECIFICATIONS

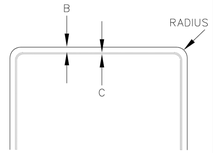

SIGN SIZE	BORDER WIDTHS (INCH)			RADIUS (INCH)
	A	B	C	
< 12"	N/A	.375	.375	1
≥ 12"	N/A	.375	.438	1.5

MINIMUM LETTER HEIGHTS ON STREET NAME SIGNS

(MUTCD 2009 EDITION–TABLE 2D–2)

TYPE OF MOUNTING	TYPE OF STREET OR HIGHWAY	SPEED LIMIT	RECOMMENDED MINIMUM LETTER HEIGHT **	
			INITIAL UPPER–CASE	LOWER–CASE
OVERHEAD	ALL TYPES	ALL SPEED LIMITS	12 INCHES	9 INCHES
POST–MOUNTED	MULTI–LANE	MORE THAN 40 MPH	8 INCHES	6 INCHES
POST–MOUNTED	MULTI–LANE	40 MPH OR LESS	6 INCHES	4.5INCHES
POST–MOUNTED	2–LANE	ALL SPEED LIMITS	6 INCHES*	4.5 INCHES*

*ON LOCAL 2–LANE STREETS W/SPEED LIMITS OF 25 MPH OR LESS, 4" INITIAL UPPER–CASE LETTERS WITH 3" LOWER CASE LETTERS MAY BE USED.

** SUPPLEMENTARY LETTERING (E.G. ST., DR., LN., & NUMBERING) SHALL BE A MINIMUM OF ½ THE APPLICABLE RECOMMENDED MINIMUM LETTER HEIGHT PER ABOVE TABLE

CITY OF LONE TREE PUBLIC WORKS	INTERSECTION STREET NAME SIGNAGE	SHEET
DATE: 04/19/12 BY: GRW	DRAWING NO.: SN–03	3 OF 3

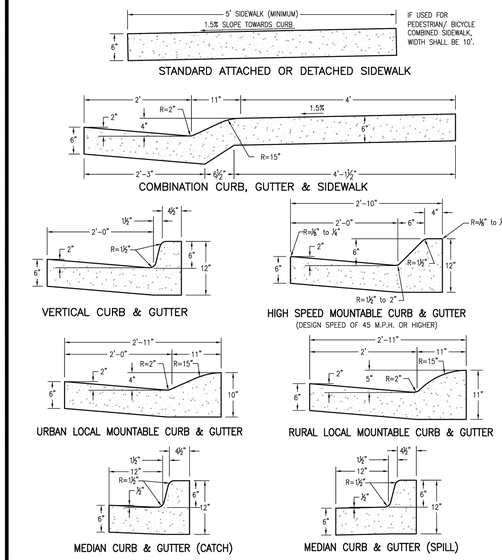

NOTES:
1. IF A SIDEWALK IS PLACED BEHIND THE CURB BUT IS NOT PLACED MONOLITHICALLY, EXPANSION JOINT MATERIAL AND A SILICONE BASE SEALER MUST BE APPLIED BETWEEN THE SIDEWALK AND THE CURB.
2. SEE DRAWING NUMBER SP.23a and SP.23b FOR TRENCH DRAIN.
3. SEE DRAWING NUMBER SP.31 AND SP.32 FOR CONCRETE JOINTS.

CURB & GUTTERS AND SIDEWALKS	Issued: 05/2013
DOUGLAS COUNTY COLORADO	Revised: 09/2017
	Drawing No. SP.17

Panel Installation Notes:

1. DETECTABLE WARNING PANELS, 24" X 24" OR 24" X 30" IN SIZE, SHALL BE PREFABRICATED REDDISH WITH TRUNCATED DOMES AND COMPLY WITH ADA REQUIREMENTS. ONLY FULL PANELS SHALL BE USED TO OBTAIN SPECIFIC RAMP THROAT WIDTH, (I.E. TWO 24" PANELS FOR A 4' RAMP, TWO 30" PANELS FOR A 5' RAMP, ETC.)
2. PRIOR TO START OF WORK, CONTRACTOR SHALL SUBMIT, TO DOUGLAS COUNTY FOR APPROVAL, A SAMPLE PANEL AND DOCUMENTATION FROM THE MANUFACTURER. PANEL SURFACE SHALL HAVE A MINIMUM OF 70% LIGHT REFLECTIVITY CONTRAST WITH THE ADJOINING SURFACE. PANELS SHALL ONLY BE SELECTED FROM THE APPROVED PRODUCT LIST BELOW:

PRODUCT NAME	MANUFACTURER	PRODUCER SUPPLIER CODE
CAST–DWD	Pioneer Detectable, LLC	GEN130004
Cast–In–Place Tactile	ADA Solutions, Inc.	GEN100123
DURALAST	EJ USA, Inc.	GEN130020
Detectable Warning Paving Slab	StoneBilt Concepts	GEN100341
TekWay Dome–Tiles	StrongGo LLC	GEN100343
TufTile Cast Iron Tile/Radius–Wedge (CIP)	TufTile, Inc.	GEN150088

3. PANELS SHALL BE PLACED AS SHOWN, WITH DOME PATTERN IN A SQUARE GRID AND ALIGNED IN THE DIRECTION OF TRAVEL. A STEEL TEMPLATE SHALL BE USED TO ENSURE PROPER ALIGNMENT AND UNIFORM GRADE.
4. REMOVE THE PROPER AMOUNT OF CONCRETE WITHIN THE TEMPLATE FOR AN ACCURATE INSTALLATION. ONCE TO THE PROPER DEPTH, FLOAT THE AREA TO RECEIVE THE PANELS UNTIL A SMOOTH PASTE HAS DEVELOPED.
5. WET THE BACK SIDE OF EACH PANEL AND TROWEL SOME CONCRETE PASTE OR APPROVED BONDING AGENT OVER THE WET SURFACE FOR BETTER ADHERENCE.
6. SET THE FIRST PANEL ON THE FRESHLY PREPARED SURFACE. DO NOT PRESS DOWN HARD ON THE PANEL, BUT PREFERABLY TWIST FROM SIDE TO SIDE. SET PANEL WITH RUBBER MALLET TO PROPER DEPTH SO THAT THE BASE OF THE TRUNCATED DOME IS AT THE SAME ELEVATION AS THE ADJOINING RAMP SURFACE.
7. SET SUCCESSIVE PANELS WITH A TIGHT BUTT JOINT AGAINST THE PREVIOUSLY SET PANEL. PROVIDE A ⅛" GAP BETWEEN PANELS.
8. FLOAT FRESH CONCRETE AROUND PANELS. FINISH AND BROOM SURROUNDING CONCRETE AS SPECIFIED. CLEAN ANY CONCRETE OFF PANELS WITH A SPONGE.
9. PROVIDE 1" DEEP TOOL JOINTS AT CORNERS OF DETECTABLE WARNING AREA, AND TOOL AROUND PANELS WITH ⅛" RADIUS EDGER.
10. WHEN CUT PANELS ARE REQUIRED, CUT SECTIONS SHALL NOT SIGNIFICANTLY IMPACT OVERALL TRUNCATED DOMES PATTERN AND CUT DOMES SHALL BE BEVELED AT A 45–DEGREE ANGLE TO CREATE A SMOOTH TRANSITION.
11. ANY PANELS THAT ARE DAMAGED DURING TRANSPORT OR INSTALLATION WILL BE REJECTED AND SHALL NOT BE INSTALLED.
12. CLEAN OUT ⅛" JOINT(S) BETWEEN PANELS AND SEAL WITH EPOXY.
13. SETTING TRUNCATED DOME PANELS IN SAND BEDDING OR OTHER NON–CEMENTITIOUS BEDDING MATERIALS SHALL NOT BE ALLOWED.

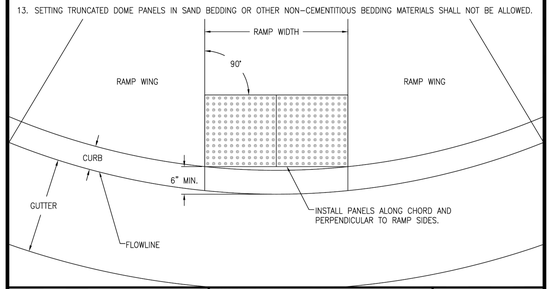

CURB RAMP WITH PANEL DETECTABLE WARNING AREA INSTALLATION	Issued: 05/2013
DOUGLAS COUNTY COLORADO	Revised: 09/2017
	Drawing No. SP.18b

Paver Installation Notes:

1. DETECTABLE WARNING PAVERS SHALL BE PREFABRICATED REDDISH INTEGRALLY COLORED TRUNCATED DOMES SURFACED CONCRETE OR MASONRY PAVERS. PAVERS SHALL MEET THE REQUIREMENTS OF ASTM C 902 OR ASTM C 936 AND COMPLY WITH ADA REQUIREMENTS.
2. PRIOR TO START OF WORK, CONTRACTOR SHALL SUBMIT, TO DOUGLAS COUNTY FOR APPROVAL, A SAMPLE PAVER AND DOCUMENTATION FROM THE MANUFACTURER. PAVERS SURFACE SHALL HAVE A MINIMUM OF 70% LIGHT REFLECTIVITY CONTRAST WITH THE ADJOINING SURFACE.
3. WELL FOR PAVERS SHALL BE ACCURATELY BLOCKED OUT TO ENSURE PROPER DEPTH, ALIGNMENT, AND UNIFORM GRADE. ONLY FULL WIDTH PAVERS SHALL BE USED TO OBTAIN SPECIFIED RAMP THROAT WIDTH.
4. PAVERS SHALL BE PLACED IN THE RUNNING PATTERN SHOWN, DOMES PLACED IN A SQUARE GRID AND ALIGNED IN THE DIRECTION OF TRAVEL. PAVERS SHALL BE INSTALLED SO THAT THE BASES OF THE TRUNCATED DOMES ARE AT THE SAME ELEVATION AS THE ADJOINING RAMP SURFACE.
5. SAND FOR BEDDING MATERIAL SHALL CONFORM TO ASTM C 33. SAND TO BE PLACED BETWEEN JOINTS SHALL CONFORM TO ASTM C 144.
6. BEDDING SAND SHALL BE SCREED TO THE APPROPRIATE DEPTH PRIOR TO THE PAVERS INSTALLATION. A PLATE VIBRATOR SHALL BE USED TO EMBED THE PAVERS INTO THE SAND. ANY PAVERS THAT ARE DAMAGED DURING TRANSPORTATION OR INSTALLATION WILL BE REJECTED AND SHALL BE REPLACED AT THE CONTRACTOR'S EXPENSE.
7. WHEN CUT PAVERS ARE REQUIRED, CUT SECTIONS SHALL NOT SIGNIFICANTLY IMPACT OVERALL TRUNCATED DOMES PATTERN AND CUT DOMES SHALL BE BEVELED AT A 45–DEGREE ANGLE TO CREATE A SMOOTH TRANSITION.
8. JOINT SPACING SHALL BE IN ACCORDANCE WITH THE MANUFACTURER'S RECOMMENDATIONS, BUT SHALL NOT BE MORE THAN ⅛". JOINTS SHALL BE FILLED COMPLETELY WITH SAND. EXCESS SAND SHALL BE REMOVED BY SWEEPING.

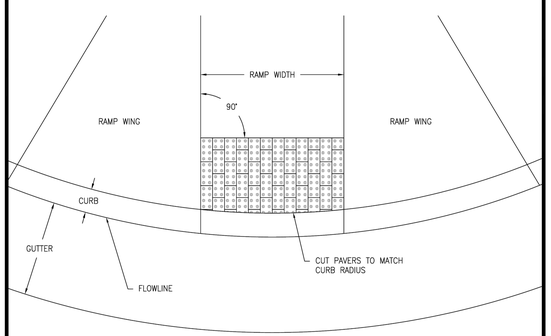

CURB RAMP WITH PAVER DETECTABLE WARNING AREA INSTALLATION	Issued: 05/2013
DOUGLAS COUNTY COLORADO	Revised: 09/2017
	Drawing No. SP.18c

Know what's **below.** **Call** before you dig.

CITY OF LONE TREE

DATE

THESE CONSTRUCTION PLANS HAVE BEEN REVIEWED BY THE CITY OF LONE TREE FOR STREET AND DRAINAGE, SIGNAGE AND STRIPING IMPROVEMENTS ONLY.

ENGINEERING DIVISION ACCEPTANCE BLOCK

ENGINEER'S STATEMENT

PREPARED UNDER MY SUPERVISION

KEVIN J. ROHRBOUGH, PE
COLORADO P.E. 48992
FOR AND ON BEHALF OF JR ENGINEERING, LLC

COLORADO REGISTERED PROFESSIONAL ENGINEER KEVIN J. ROHRBOUGH 48992 9/4/26

DATE

UNTIL SUCH TIME AS THESE DRAWINGS ARE APPROVED BY THE APPROPRIATE REVIEWING AGENCIES, JR ENGINEERING APPROVES THEIR USE ONLY FOR THE PURPOSES DESIGNATED BY WRITTEN AUTHORIZATION.

PREPARED FOR
RAMPART RANGE METRO DISTRICT
2001 16TH STREET
SUITE 1700
DENVER, CO 80202
PHONE: 303-779-5710

J·R ENGINEERING
A Westrian Company
Centennial 303-740-9393 • Colorado Springs 719-593-2593
Fort Collins 970-491-9888 • www.jrengineering.com

No.	REVISION	BY	DATE
0	FOR APPROVAL	KJR	9/2/26

H–SCALE	N/A		
V–SCALE	N/A	DATE	9/4/26
DESIGNED BY	N/A		
DRAWN BY	KAC		
CHECKED BY			

HILLCAMP TRAIL

STORM SEWER & ROADWAY DETAILS

SHEET 35 OF 80

JOB NO. 15950.18

C:\Users\Crumpk.JRENGINEERING\DC\ACCDocs\JR Engineering\15950012\Project Files\15950018 Cabela Drive\Drawings\Sheet Drawings\15950018 Cabela Drive CoLT\15950018 DT01.dwg, DT02, 9/8/2026 2:50:48 PM, crumpk

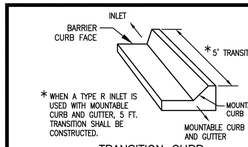

TRANSITION CURB

GENERAL NOTES:
SEE SHEET 2

GROOVING FOR TEXT AND LOGO SHALL BE ⅛" DEPTH AND ⅛" WIDTH

DETAIL FISH LOGO
NO SCALE

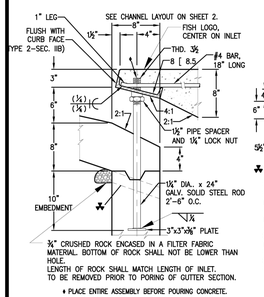

CURB FACE ASSEMBLY

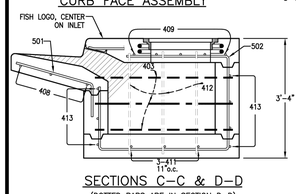

SECTIONS C–C & D–D
(DOTTED BARS ARE IN SECTION D–D)

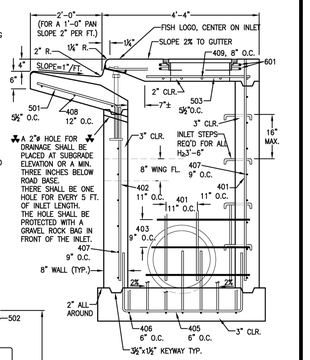

SECTION B–B
END VIEW

NOTE: MANHOLE RING & COVER, STATION POINT AND OUTFLOW PIPE SHALL BE LOCATED AT THE SAME END OF THE INLET.

REFERENCE:
CDOT M & S STANDARDS
M-604-12

CURB INLET - TYPE R (5', 10' OR 15' IN LENGTH)

DOUGLAS COUNTY COLORADO

Issued: 05/2013
Revised:
Drawing No. **SP.34a**

★ FOR LENGTH (L) GREATER THAN 5 FT. PROVIDE MAINTENANCE ACCESS AT BOTH ENDS.

■ ADDITIONAL MANHOLE RING AND COVER REQUIRED WHEN L=10 FT. OR MORE. CUT REINFORCEMENT BAR ACCORDINGLY.

● INLET DECK SHALL BE FORMED AND POURED TO THE WIDTH OF THE PROPOSED SIDEWALK.

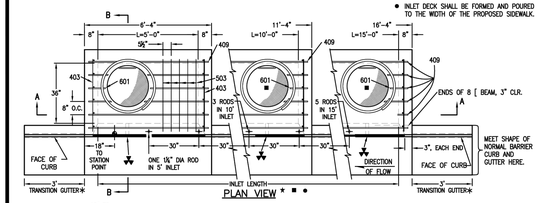

PLAN VIEW * ■ ●

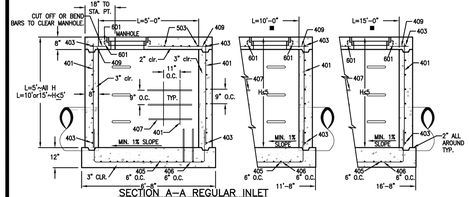

SECTION A–A REGULAR INLET

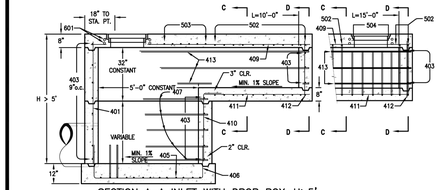

SECTION A–A INLET WITH DROP BOX~H>5'

REFERENCE:
CDOT M & S STANDARDS
M-604-12

CURB INLET - TYPE R (5', 10' OR 15' IN LENGTH)

DOUGLAS COUNTY COLORADO

Issued: 05/2013
Revised:
Drawing No. **SP.34b**

MARK	BAR # OR SIZE	O.C. SPACING	TYPE	ALL INLETS L = 5 FT. NO. REQ'D.	ALL INLETS L = 5 FT. LENGTH	INLETS: H ≤ 5 FT. L = 10 FT. NO. REQ'D.	L = 10 FT. LENGTH	L = 15 FT. NO. REQ'D.	L = 15 FT. LENGTH	INLETS: H > 5 FT. L = 10 FT. NO. REQ'D.	L = 10 FT. LENGTH	L = 15 FT. NO. REQ'D.	L = 15 FT. LENGTH
401	4	11"	II	15	*	21	*	26	*	11	*	11	*
402	4	11"	II	7	*	13	*	18	*	7	*	7	*
403	4	9 "	II	*	4'-0"	*	4'-0"	*	4'-0"	*	4'-0"	*	4'-0"
405	4	6 "	VI	11	6'-10"	21	6'-10"	31	6'-10"	11	6'-10"	11	6'-10
406	4	6 "	VIII	7	8'-10"	7	13'-10"	7	18'-10"	7	8'-10"	7	8'-10"
407	4	9 "	II	*	5'-10"	*	10'-10"	*	15'-10"	*	5'-10"	*	5'-10"
408	4	12"	II	3	6'-10"	3	11'-10"	3	16'-0"	3	11'-10"	3	16'-0"
409	4	8 "	II	6	5'-10"	6	10'-10"	6	15'-10"	6	10'-10"	6	15'-10"
410	4	11"	VII							3	*	3	*
411	4	11"	II							3	5'-2"	3	10'-2"
412	4	11"	II							3	2'-9"	3	2'-9"
413	4	9 "	II							7	10'-10"	7	15'-10"
501	5	5½"	IV	11	3'-4"	22	3'-4"	33	3'-4"	22	3'-4"	33	3'-4"
502	5	5½"	III							11	11'-5"	17	11'-5"
503	5	5½"	II	5	3'-6"	16	3'-6"	27	3'-6"	6	3'-6"	6	3'-6"
504	5	5½"	IX									5	8'-4"
601	6	2½"	V	2	8'-10"	2	8'-10"	2	8'-10"	2	8'-10"	4	8'-10"
■8[8.5				1	5'-10"	1	10'-10"	1	15'-10"	1	10'-10"	1	15'-10"
				2 BARS, 1 ROD	——	6 BARS, 3 RODS	——	6 BARS, 5 RODS	——	4 BARS, 3 RODS	——	8 BARS, 5 RODS	——

* VARIABLE, REFER TO TABLE TWO.
■ INCLUDE #4, 18 IN. BARS (SEE CHANNEL LAYOUT).

REGULAR INLETS — DROP BOX INLETS

TABLE ONE ~ BAR LIST FOR CURB INLETS, TYPE "R"

"H"	LENGTH 401	LENGTH 402	LENGTH 410	NO. REQ'D. REGULAR 403	NO. REQ'D. REGULAR 407	NO. REQ'D. DROP BOX 403	NO. REQ'D. DROP BOX 407	L=5' CONC. CU. YDS.	L=5' STEEL LBS.	L=10' CONC. CU. YDS.	L=10' STEEL LBS.	L=15' CONC. CU. YDS.	L=15' STEEL LBS.
3'-0"	2'-8"	1'-8"		10	7			3.2	285	5.3	497	7.4	706
3'-6"	3'-2"	2'-2"		10	7			3.4	305	5.7	528	7.9	747
4'-0"	3'-8"	2'-8"		12	9			3.7	326	6.0	559	8.4	786
4'-6"	4'-2"	3'-2"		12	9			3.9	334	6.4	571	8.8	803
5'-0"	4'-8"	3'-8"		14	11			4.1	354	6.7	602	9.3	844
5'-6"	5'-2"	4'-2"	3'-5"	16	13	15	6	4.4	375	6.0	607	7.4	850
6'-0"	5'-8"	4'-8"	3'-11"	16	13	16	6	4.6	382	6.2	616	7.6	860
6'-6"	6'-2"	5'-2"	4'-5"	18	15	18	8	4.8	402	6.4	637	7.8	880
7'-0"	6'-8"	5'-8"	4'-11"	20	17	19	10	5.0	423	6.6	654	8.0	897
7'-6"	7'-2"	6'-2"	5'-5"	20	17	20	10	5.3	430	6.9	664	8.3	907
8'-0"	7'-8"	6'-8"	5'-11"	22	19	22	12	5.5	451	7.1	684	8.5	927
8'-6"	8'-2"	7'-2"	6'-5"	24	21	23	14	5.7	471	7.3	702	8.7	944
9'-0"	8'-8"	7'-8"	6'-11"	24	21	24	14	6.0	479	7.6	711	9.0	954
9'-6"	9'-2"	8'-2"	7'-5"	26	23	26	16	6.2	499	7.8	732	9.2	974
10'-0"	9'-8"	8'-8"	7'-11"	28	25	27	18	6.4	520	8.0	749	9.4	992
10'-6"	10'-2"	9'-2"	8'-5"	28	25	28	18	6.7	527	8.3	759	9.7	1001
11'-0"	10'-8"	9'-8"	8'-11"	30	27	30	20	6.9	547	8.5	779	9.9	1022

NOTES: FOR L=5 FT., L=10 FT., AND L=15 FT.
REGULAR INLETS: TOTAL QUANTITIES NEEDED ARE OUTSIDE THE HEAVY BLACK LINE.
DROP BOX INLETS: TOTAL QUANTITIES NEEDED ARE INSIDE THE HEAVY BLACK LINE.

STEEL WEIGHTS DO NOT INCLUDE STRUCTURAL STEEL CHANNEL.

TABLE TWO ~ BARS AND QUANTITIES VARIABLE WITH "H"

REFERENCE:
CDOT M & S STANDARDS
M-604-12

CURB INLET - TYPE R (5', 10' OR 15' IN LENGTH)

DOUGLAS COUNTY COLORADO

Issued: 05/2013
Revised:
Drawing No. **SP.34c**

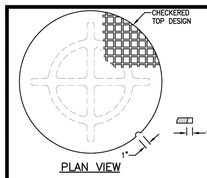

GENERAL NOTES

1. ALL CONCRETE SHALL BE CLASS D. INLET SHALL BE CAST-IN-PLACE.
2. CONCRETE WALLS SHALL BE FORMED ON BOTH SIDES AND SHALL BE 8" THICK.
3. INLET STEPS SHALL BE IN CONFORMANCE WITH AASHTO M 199.
4. CURB FACE ASSEMBLY SHALL BE GALVANIZED AFTER WELDING.
5. EXPOSED CONCRETE CORNERS SHALL BE CHAMFERED ¾" CURB AND GUTTER CORNERS SHALL BE FINISHED TO MATCH THE EXISTING CURB AND GUTTER BEYOND THE TRANSITION GUTTER.
6. REINFORCING BARS SHALL BE DEFORMED AND SHALL HAVE A 2" MINIMUM CLEARANCE. ALL REINFORCING BARS SHALL BE EPOXY COATED.
7. DIMENSIONS AND WEIGHTS OF TYPICAL MANHOLE RING AND COVER ARE NOMINAL.
8. MATERIAL FOR MANHOLE RINGS AND COVERS SHALL BE GRAY OR DUCTILE CAST IRON IN ACCORDANCE WITH CDOT STANDARD SPECIFICATIONS, SUBSECTION 712.06.
9. SINCE PIPE ENTRIES INTO THE INLET ARE VARIABLE, THE DIMENSIONS SHOWN ARE TYPICAL. ACTUAL DIMENSIONS AND QUANTITIES FOR CONCRETE AND REINFORCEMENT SHALL BE AS REQUIRED IN THE WORK. QUANTITIES INCLUDE VOLUMES OCCUPIED BY PIPES.
10. STRUCTURAL STEEL SHALL BE GALVANIZED AND SHALL BE IN ACCORDANCE WITH CDOT STANDARD SPECIFICATIONS, SUBSECTION 712.06.
11. THE OUTSIDE WALL OF ANY PIPE THAT ENTERS OR EXITS THE INLET UNDER THE GUTTER SECTION NEEDS TO BE BELOW THE CURB FACE ASSEMBLY.
12. IF ANY REBAR HAS TO BE CUT ON THE JOB SITE, THE EXPOSED BARE STEEL SHALL BE IMMEDIATELY COVERED WITH A MANUFACTURE APPROVED EPOXY PAINT PRIOR TO POUR.
13. EXPANSION JOINT MATERIAL NEEDS TO BE PLACED BETWEEN THE OUTSIDE WALL OF THE INLET AND ANY SIDEWALK TO BE POURED NEXT TO THE INLET.
14. INLET LID SHALL MATCH ROADWAY SLOPE.
15. IF INLET FLOOR IS NOT SLOPED 1% TO OUTLET, CORRECTIVE MEASURES WILL NEED TO BE COMPLETED PER INSPECTIONS DIVISION.
16. IF TRENCH DRAIN IS INSTALLED WITH THE ROADWAY/DRAINAGE IMPROVEMENTS, THE TRENCH DRAIN SHALL BE CONNECTED PER THE TRENCH DRAIN CONNECTION TO INLET OR MANHOLE DETAIL.

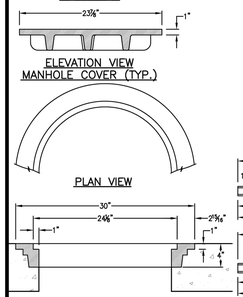

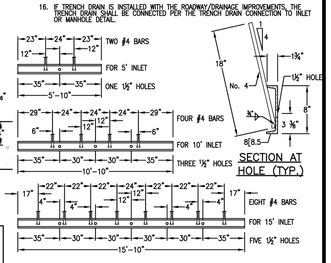

CHANNEL LAYOUT DETAILS
SEE CURB FACE ASSEMBLY ON SP.34a.

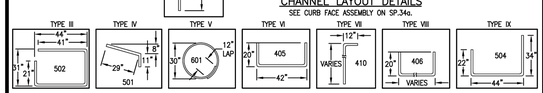

BAR BENDING DIAGRAMS ~ (Dimensions are Out-to-Out of bar)

REFERENCE:
CDOT M & S STANDARDS
M-604-12

CURB INLET - TYPE R (5', 10' OR 15' IN LENGTH)

DOUGLAS COUNTY COLORADO

Issued: 05/2013
Revised:
Drawing No. **SP.34d**

GENERAL NOTES

1. DIMENSIONS OF END SECTIONS MAY VARY SLIGHTLY FROM THOSE SHOWN ON THE TABLES DUE TO DIFFERENT MANUFACTURER'S VARIATIONS.
2. CONCRETE END SECTIONS ARE TO BE FURNISHED WITH TONGUE OR GROOVE AS REQUIRED.
3. DESIGN LENGTH OF CULVERT OR SIDE DRAIN IS BASED ON LENGTH OF END SECTION SHOWN IN TABLE. ANY ADDITIONAL PIPE REQUIRED TO PROVIDE THE DESIGN LENGTH SHALL BE FURNISHED BY AND AT THE EXPENSE OF THE CONTRACTOR.
4. INSIDE CONFIGURATION AND JOINT OF CONCRETE END SECTION END PIPE SHALL MATCH.
5. END SECTIONS FOR CMP ARCH CULVERT SHALL MATCH THE DIMENSIONS OF THE CULVERT SHOWN ON THE PLANS.
6. GALVANIZED TOE PLATE AS SHOWN, WILL BE REQUIRED ON END SECTIONS FOR CORRUGATED STEEL PIPE AND SHALL BE THE SAME THICKNESS AS END SECTIONS. TOE PLATE SHALL BE FIELD-BOLTED TO END SECTION WITH ⅜" GALVANIZED BOLTS, NUTS AND WASHERS.
7. GALVANIZED STEEL SHALL BE IN CONFORMANCE WITH AASHTO M 111, M 218 OR M 232.
8. FOR TYPE SD END SECTIONS, BARS SHALL BE FABRICATED FROM NPS-3 GALVANIZED STEEL SCHEDULE 40 PIPE WHICH SHALL BE IN CONFORMANCE WITH ASTM A 53.
9. FOR A TYPE SD END SECTION, THE INSTALLATION OF ALTERNATIVE 1 OR ALTERNATIVE 2 END SECTION SHALL BE THE CONTRACTOR'S OPTION.
10. CONCRETE PIPE JOINT FASTENERS SHALL BE INSTALLED AT THE FLARED END SECTION AND LAST TWO PIPE JOINTS OF ALL RCP OUTFALLS.
11. CONNECTIONS OF METAL END SECTIONS TO PLASTIC PIPE SHALL BE APPROVED BY THE ENGINEER.
12. CLASS D CONCRETE TOE WALLS ARE REQUIRED AT THE ENDS OF ALL FLARED END SECTIONS.

REINFORCED CONCRETE PIPE

Pipe Inner Diameter (inches)	Wall Thickness (inches)	A (inches)	C (inches)	L (inches)	E (inches)
18	2½	9	45	73	36
24	3	9½	30	73 ½	48
30	3½	12	19 ¾	73 ½	60
36	4	15	34 ¾	97 ½	72
42	4½	21	35	98	78
48	5	24	26	98	84
54	5½	27	35	100	90
60	6	30	39	99	96
66	6½	32	21	99	102
72	7	34	21	99	108

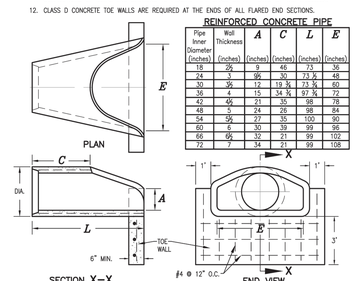

END SECTION FOR REINFORCED CONCRETE CIRCULAR PIPE

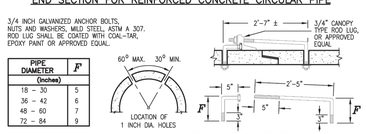

PIPE DIAMETER (inches)	F
18 – 30	5
36 – 42	6
48 – 60	7
72 – 84	9

CONCRETE JOINT FASTENER
(TWO PER JOINT)

REFERENCE:
CDOT M & S STANDARDS
M-603-10

CONCRETE OR METAL END SECTIONS

DOUGLAS COUNTY COLORADO

Issued: 05/2013
Revised: 09/2017
Drawing No. **SP.52a**

UNTIL SUCH TIME AS THESE DRAWINGS ARE APPROVED BY THE APPROPRIATE REVIEWING AGENCIES, JR ENGINEERING APPROVES THEIR USE ONLY FOR THE PURPOSES DESIGNATED BY WRITTEN AUTHORIZATION.

PREPARED FOR
RAMPART RANGE METRO DISTRICT
2001 16TH STREET
SUITE 1700
DENVER, CO 80202
PHONE: 303-779-5710

J·R ENGINEERING
A Westrian Company
Centennial 303-740-9393 • Colorado Springs 719-593-2593
Fort Collins 970-491-9888 • www.jrengineering.com

No.	REVISION	BY	DATE
0	FOR APPROVAL	KJR	9/2/26

811 Know what's below. Call before you dig.

CITY OF LONE TREE

DATE

THESE CONSTRUCTION PLANS HAVE BEEN REVIEWED BY THE CITY OF LONE TREE FOR STREET AND DRAINAGE, SIGNAGE AND STRIPING IMPROVEMENTS ONLY.

ENGINEERING DIVISION ACCEPTANCE BLOCK

ENGINEER'S STATEMENT
PREPARED UNDER MY SUPERVISION

KEVIN ROHRBOUGH, PE
COLORADO P.E. 48992
FOR AND ON BEHALF OF JR ENGINEERING, LLC

DATE

COLORADO REGISTERED KEVIN S. ROHRBOUGH 48992 9/4/26 PROFESSIONAL ENGINEER

H-SCALE	N/A
V-SCALE	N/A
DATE	9/4/26
DESIGNED BY	N/A
DRAWN BY	KAC
CHECKED BY	

HILLCAMP TRAIL
STORM SEWER & ROADWAY DETAILS

SHEET 36 OF 80
JOB NO. 15950.18

C:\Users\Crumpk_JR\ENGINEERING\DC\ACCDocs\JR Engineering\15950012\Project Files\15950018 Cabela Drive\Drawings\Sheet Drawings\15950018 Cabela Drive CoLT\15950018 DT01.dwg, DT03, 9/8/2026 2:49:10 PM, crumpk

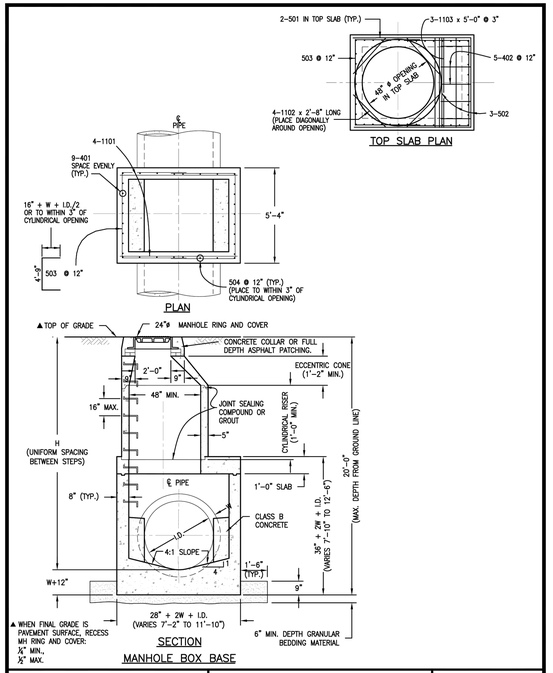

REFERENCE: CDOT M & S STANDARDS M-604-20

MANHOLES

DOUGLAS COUNTY COLORADO

Issued: 05/2013
Revised:
Drawing No. **SP.43a**

GENERAL NOTES

1. SINCE ALL PIPE ENTRIES INTO THE BASE ARE VARIABLE, THE DIMENSIONS SHOWN ARE TYPICAL. ACTUAL DIMENSIONS AND QUANTITIES FOR CONCRETE AND REINFORCEMENT SHALL BE AS REQUIRED IN THE WORK.
2. THE PRECAST FLAT TOP MAY BE USED ON ANY MANHOLE. THE ECCENTRIC CONE MAY BE USED WHEN THE MANHOLE "H" HEIGHT IS AT LEAST 8'.
3. THE MH RING (FRAME) SHALL BE SET ON CONCRETE GRADE RINGS. THE FRAME SHALL BE SURROUNDED WITH A CONCRETE COLLAR IN UNPAVED AREA AND CONCRETE PAVEMENT, OR FULL DEPTH ASPHALT IN ASPHALT PAVEMENT. SEE DETAILS ON SHEETS 2 AND 3.
4. DESIGN OF BOX BASE IS BASED ON STRAIGHT RUNS OF CONDUIT OR CHANGE IN DIRECTION OF LESS THAN 45°. SPECIAL DESIGN IS REQUIRED FOR 45° OR GREATER.
5. PRECAST MANHOLES AND REINFORCEMENT SHALL CONFORM TO ASTM C 478 (AASHTO M 199).
6. CAST-IN-PLACE MANHOLES SHALL BE CLASS D CONCRETE.
7. STEPS SHALL BE REQUIRED WHEN THE MANHOLE DEPTH EXCEEDS 3'-6" AND SHALL BE IN ACCORDANCE WITH AASHTO M 199.
8. ALL REINFORCING STEEL SHALL HAVE A MINIMUM YIELD STRENGTH OF 60,000 PSI. VERTICAL STEEL SHALL BE PLACED AT L OF WALL. ALL BARS SHALL HAVE A 2" MINIMUM CLEARANCE. ALL REINFORCING BARS SHALL BE EPOXY COATED.
9. IF ANY REBAR HAS TO BE CUT ON THE JOB SITE, THE EXPOSED BARE STEEL SHALL BE IMMEDIATELY COVERED WITH A MANUFACTURE APPROVED EPOXY PAINT PRIOR TO POUR.
10. ALL PIPE ENTRIES INTO THE BASE OF MANHOLE SHALL BE CONNECTED BY OPEN CHANNELIZATION ADJUSTED FOR PIPE SIZE, SHAPE, SLOPE, AND DIRECTION OF FLOW. DETAILS SHOWN ARE TYPICAL FOR INSTALLATIONS WITH ALL INVERTS OF SAME RELATIVE ELEVATION. FOR EXCESSIVE ELEVATION DIFFERENCE BETWEEN INVERTS, SPECIAL BASE/CHANNEL DETAILS WILL BE SHOWN ON THE PLANS.
11. FLOW CHANNELS AND INVERTS SHALL BE FORMED BY SHAPING WITH CLASS B CONCRETE.
12. STUB-OUTS SHALL EXTEND A MINIMUM OF 1 PIPE SECTION BEYOND OUTSIDE WALL SURFACE OF MANHOLE AND BE SATISFACTORILY PLUGGED.
13. CHECK WITH THE LOCAL GOVERNMENT AUTHORITY FOR ANY ADDITIONAL SANITARY SEWER SPECIFICATIONS, DETAILS, OR REGULATIONS.
14. THE SLOPE OF THE MANHOLE COVER SHALL MATCH THE ROADWAY PROFILE AND CROSS SLOPE.

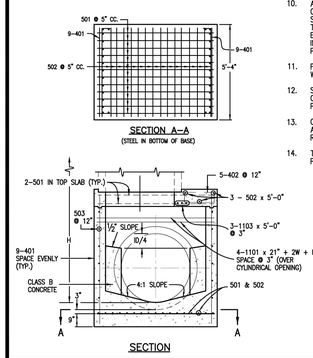

REFERENCE: CDOT M & S STANDARDS M-604-20

MANHOLES

DOUGLAS COUNTY COLORADO

Issued: 05/2013
Revised:
Drawing No. **SP.43b**

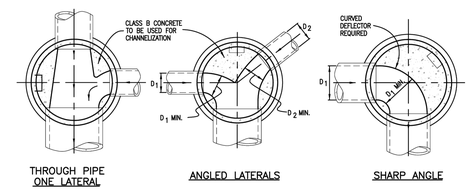

TYPICAL CHANNELIZATION DETAILS

QUANTITIES FOR CONCRETE MANHOLE BOX BASE

MARK	SIZE	TYPE	WT. #/FT.	BARS	I.D. 60"	I.D. 66"	I.D. 72"	I.D. 84"	I.D. 96"	FORMULAS
401	4	I	0.668	NO. REQ'D.	18	18	18	18	18	401
				LENGTH	8'-8"	9'-3"	9'-10"	11'-0"	12'-2"	BAR LENGTH = 32"+2W+I.D.
				WEIGHT *	104.2	111.2	118.2	132.3	146.3	
402	4	III	0.668	NO. REQ'D.	5	5	5	5	5	402
				LENGTH	6'-0"	6'-7"	7'-2"	8'-4"	9'-6"	BAR LENGTH = I.D. + 2W
				WEIGHT *	20.0	22.0	23.9	27.8	31.7	
501	5	I	1.043	NO. REQ'D.	17	17	17	17	17	501
				LENGTH	8'-0"	8'-7"	9'-2"	10'-4"	11'-6"	BAR LENGTH = 24" + I.D. + 2W
				WEIGHT *	141.8	152.2	162.5	183.2	203.9	
502	5	I	1.043	NO. REQ'D.	23	25	26	29	32	502
				LENGTH	5'-0"	5'-0"	5'-0"	5'-0"	5'-0"	NUMBER BARS REQ'D. = $3 + \left(\frac{2\times4+I.D.+2W}{@\ 5"}+1\right)$
				WEIGHT *	119.9	130.4	135.6	151.2	166.9	
503	5	II	1.043	NO. REQ'D.	16	18	18	20	24	503
				LENGTH	13'-5"	14'-0"	14'-7"	15'-9"	16'-11	NUMBER BARS REQ'D. = $2\left(\frac{13+I.D.+2W}{@\ 12"}+1\right)$
				WEIGHT *	223.9	262.8	273.8	328.5	423.5	BAR LENGTH = 4'-9"+2(16+W+I.D./2)
504	5	I	1.043	NO. REQ'D.	14	14	16	18	20	504
				LENGTH	8'-8"	9'-3"	9'-10"	11'-0"	12'-2"	NUMBER BARS REQ'D. = $2\left(\frac{2W+I.D.-4}{@\ 12"}+1\right)$
				WEIGHT *	126.6	135.1	164.1	206.5	253.8	BAR LENGTH = 32"+2W+I.D.
1101	11	I	5.313	NO. REQ'D.	4	4	4	4	4	1101
				LENGTH	7'-9"	8'-4"	8'-11"	10'-1"	11'-3"	BAR LENGTH = 21" + I.D. + 2W
				WEIGHT *	164.7	177.1	189.5	214.3	239.1	
1102	11	I	5.313	NO. REQ'D.	4	4	4	4	4	BENDING
				LENGTH	2'-8"	2'-8"	2'-8"	2'-8"	2'-8"	TYPE I: STRAIGHT
				WEIGHT *	56.7	56.7	56.7	56.7	56.7	
1103	11	I	5.313	NO. REQ'D.	3	3	3	3	3	TYPE II: 4'-9"; 16"+W+I.D./2
				LENGTH	5'-0"	5'-0"	5'-0"	5'-0"	5'-0"	
				WEIGHT *	79.7	79.7	79.7	79.7	79.7	TYPE III: 12"; 12"; 7"; I.D.+2W-38"
REINFORCING STEEL TOTAL *					1,037.5	1,127.2	1,204.0	1,380.2	1,601.6	
CONCRETE – CUBIC YARDS – TOTAL					6.6	7.3	8.0	9.5	11.1	

NOTE: QUANTITIES ARE BASED ON SAME SIZE PIPE ENTRANCE TO AND EXIT FROM, BASE AND A 4 FT. MANHOLE ENTRANCE INTO TOP SLAB OF BASE.

REFERENCE: CDOT M & S STANDARDS M-604-20

MANHOLES

DOUGLAS COUNTY COLORADO

Issued: 05/2013
Revised:
Drawing No. **SP.43c**

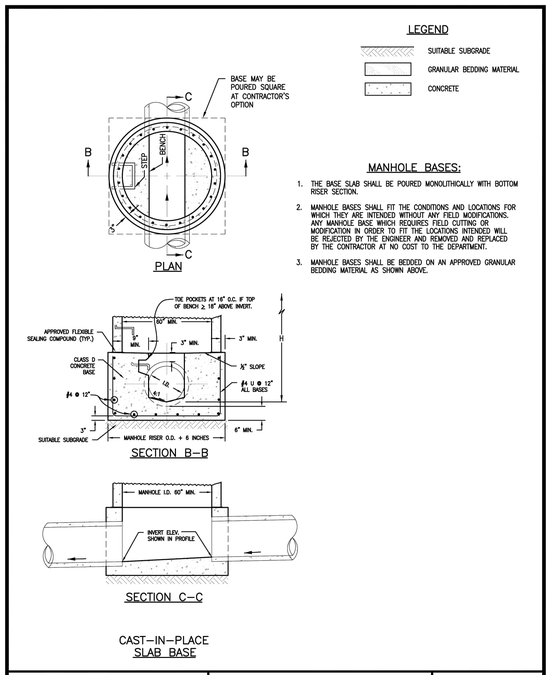

REFERENCE: CDOT M & S STANDARDS M-604-20

MANHOLES

DOUGLAS COUNTY COLORADO

Issued: 05/2013
Revised:
Drawing No. **SP.43d**

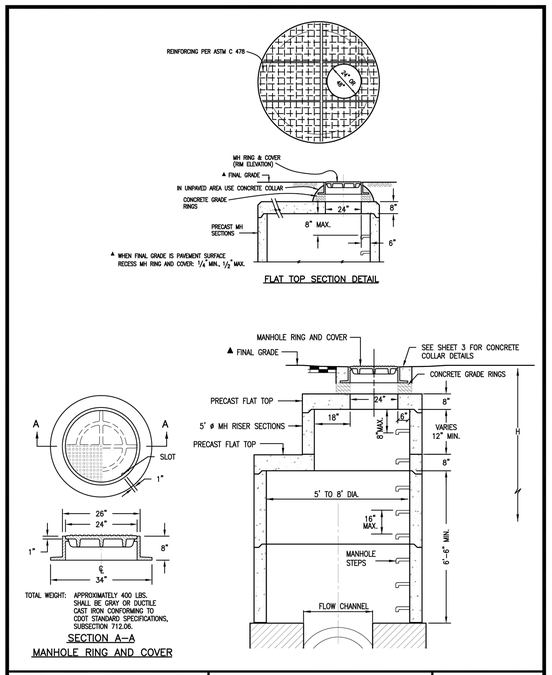

REFERENCE: CDOT M & S STANDARDS M-604-20

MANHOLES

DOUGLAS COUNTY COLORADO

Issued: 05/2013
Revised:
Drawing No. **SP.43e**

UNTIL SUCH TIME AS THE PLANS ARE APPROVED BY THE APPROPRIATE REVIEWING AGENCIES, JR ENGINEERING APPROVES THEIR USE ONLY FOR THE PURPOSES DESIGNATED BY WRITTEN AUTHORIZATION.

PREPARED FOR
RAMPART RANGE METRO DISTRICT
2001 16TH STREET
SUITE 1700
DENVER, CO 80202
PHONE: 303-779-5710

J·R ENGINEERING
A Westrian Company
Centennial 303-740-9393 • Colorado Springs 719-593-2593
Fort Collins 970-491-9888 • www.jrengineering.com

No.	REVISION	BY	DATE
0	FOR APPROVAL	KJR	9/2/26

H-SCALE	N/A	DESIGNED BY	N/A
V-SCALE	N/A	DRAWN BY	KAC
DATE	9/4/26	CHECKED BY	

811 Know what's **below.** **Call** before you dig.

CITY OF LONE TREE

DATE

THESE CONSTRUCTION PLANS HAVE BEEN REVIEWED BY THE CITY OF LONE TREE FOR STREET AND DRAINAGE, SIGNAGE AND STRIPING IMPROVEMENTS ONLY.

ENGINEERING DIVISION ACCEPTANCE BLOCK

ENGINEER'S STATEMENT

PREPARED UNDER MY SUPERVISION

KEVIN ROHRBOUGH, PE
COLORADO P.E. 48992
FOR AND ON BEHALF OF JR ENGINEERING, LLC

DATE

COLORADO REGISTERED KEVIN J. ROHRBOUGH 48992 9/4/26 PROFESSIONAL ENGINEER

HILLCAMP TRAIL

STORM SEWER & ROADWAY DETAILS

SHEET 37 OF 80

JOB NO. 15950.18

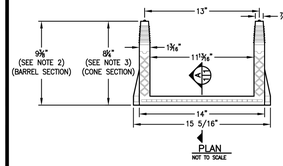

PLAN
NOT TO SCALE

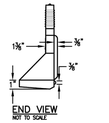

END VIEW
NOT TO SCALE

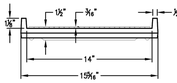

ELEVATION
NOT TO SCALE

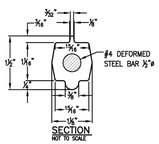

SECTION
NOT TO SCALE

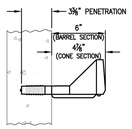

DETAIL
NOT TO SCALE

POLYPROPYLENE REINFORCED PLASTIC STEP

GENERAL NOTES

1. ASTM SPECIFICATIONS:
   A. ASTM C-478
   B. ASTM A-615 GRADE 60 (STEEL REBAR).
   C. ASTM 2146-69, TYPE III, GRADE 16906 (POLYPROPYLENE).
2. STEPS INSTALLED IN MANHOLE BARREL SECTIONS OR VERTICAL WALLS OF STRUCTURES SHALL HAVE A 9⅝" LEG AND SHALL PROJECT FROM THE WALL 6".
3. STEPS INSTALLED IN MANHOLE CONE SECTIONS SHALL HAVE AN 8⅝" LEG AND SHALL PROJECT FROM THE WALL 4⅝".
4. ALL STEPS SHALL HAVE A PENETRATION DEPTH INTO THE WALL OF 3⅜".
5. STEPS SHALL BE INSTALLED BY THE "PRESS-FIT" METHOD UTILIZING A SPECIALLY TAPERED PIN TO FORM THE INSERT HOLE AS SHOWN. FOLLOWING MANUFACTURER'S RECOMMENDED PROCEDURE AND SHALL NOT BE GROUTED IN PLACE.
6. INSTALLED STEPS SHALL BE CAPABLE OF WITHSTANDING A PULL OUT FORCE OF 2500 LB. PER LEG FOR A MINIMUM PERIOD OF TWO MINUTES.
7. PINS MUST BE SMOOTH AND CONTINUOUSLY TAPERED. DIMENSIONS OF THE PIN AND THE INSERTED PORTION OF THE MANHOLE STEP ARE TYPICAL ONLY. DOUGLAS COUNTY INSTALLATIONS REQUIRE A MATCHED COMBINATION OF A TAPERED INSERT PIN AND MANHOLE STEP, AS RECOMMENDED OR REQUIRED BY SPECIFIC MANUFACTURER OF THE STEP TO BE USED.
8. THIS STEP CAN ALSO BE USED IN TOE POCKET INSTALLATIONS PROVIDED 5" TOE CLEARANCE IS ALLOWED.

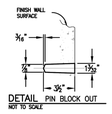

DETAIL PIN BLOCK OUT
NOT TO SCALE

REFERENCE:
CITY AND COUNTY OF DENVER
DRAWING NUMBER S-750

MANHOLE AND INLET STEPS

DOUGLAS COUNTY COLORADO

Issued: 05/2013
Revised:
Drawing No. **SP.45**

RIGID PIPE

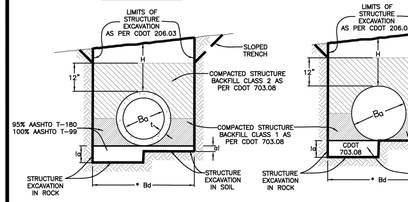

FLEXIBLE PIPE

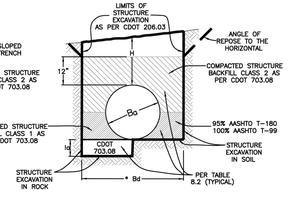

MAXIMUM HEIGHT OF FILL OVER TOP OF PIPE IN FEET

REINFORCED CONCRETE

Ba in.	Min. Bd in. **	01 INCH CRACK D-LOAD 1350	2000	3000
		PIPE CLASS III	IV	V
18	35	19	28	43
24	43	18	28	42
30	50	18	28	42
36	59	18	27	41
42	68	18	27	41
48	78	18	27	41
54	89	17	26	40
60	98	17	26	40
66	108	17	26	40
72	117	17	26	40
78	125	17	26	40
84	135	17	26	40
90	154	17	26	40
96	163	17	26	40
108	173	17	26	40
120	191	17	26	40
132	208	17	26	40
144	224	17	26	40

** Based on Bd=(1.33Ba+20). Wall thickness can vary between manufacturers.

STEEL – 2 2/3" x 1/2" CORRUGATIONS

Ba in.	Bd ft.	H ABOVE TOP OF PIPE IN FEET 1-15	16-20	21-25	26-30	31-35	36-40
		THICKNESS IN INCHES					
18-48	4-7	.064	.064	.064	.064	.064	.064
54	7.50	.079	.079	.079	.079	.079	.079
60	8.00	.079	.079	.079	.079	.109	.109
66	8.50	.079	.079	.109	.109	.138	.138
72	9.00	.079	.109	.109	.138	.168	.168
78	9.50	.109	.138	.138	.168		
84	10.00	.109	.138	.168			

LEGEND

H = Height of fill over top of pipe
Ba = Inside diameter (I.D.) of pipe
* Bd = Trench Width
t = Wall thickness of pipe
CLSM = Controlled Low Strength Material
α = Loose granular bedding, as follows:
α=0° for Flexible Culverts in Soil.
α=90° for CM culvert in Soil.
α=12° for Culvert in Rock.

* TRENCH WIDTH:
RCP: Bd = Min. of 1.33Ba+20, or (Ba+20)+12" (Per AASHTO Section 17)
CSP: Bd = Min. of Ba+4 (Per AASHTO Section 12)

! Bedding material for SOIL shall be Structural Backfill Class 1 or 2.
! Bedding material for ROCK shall be Structural Backfill Class 1.

GENERAL NOTES

1. ALL WORK SHALL BE DONE IN ACCORDANCE WITH THE STANDARD SPECIFICATIONS APPLICABLE TO THE PROJECT.
2. ALL TRENCH INSTALLATIONS SHALL BE IN ACCORDANCE WITH OSHA AND COLORADO DEPARTMENT OF TRANSPORTATION REGULATIONS.
3. THE USE OF NON-REINFORCED CONCRETE PIPE WILL NOT BE ALLOWED IN DOUGLAS COUNTY.

RCP DESIGN CRITERIA

Safety Factor = Per ASTM C76
Soil Weight = 120 lb. per cu. ft.
Bedding = Type 2

ALL UTILITY REPAIRS MUST BE BACKFILLED WITH CLSM. SEE DOUGLAS COUNTY ROADWAY DESIGN AND CONSTRUCTION STANDARDS MANUAL FOR SPECIFIC DETAILS.

CSP DESIGN CRITERIA

3"x1" CORRUGATIONS: 60 TO 84 Pipe shall be .064" thick (16 gauge) to H=40 ft.

Soil Weight = 120 lb. per cu. ft.
Safety Factor for Seam Strength = 2.00
Buckling Stress Level = 1/2 Yield Strength
Load Factor (Backfill) = 95% Standard Density, AASHTO-T 99 (K=0.86)

NOTE: All trenching shall comply with all State, Federal and O.S.H.A. safety requirements. It will be the responsibility of the Contractor to meet all safety requirements.

TO BE USED IN OPEN FIELDS OR PRIOR TO PAVING ROADS

PIPE INSTALLATION IN TRENCH

DOUGLAS COUNTY COLORADO

Issued: 05/2013
Revised:
Drawing No. **SP.46a**

NOTES:

1. This trench backfill detail specifies requirements in addition to those specified in the latest edition of the Colorado Department of Transportation's Standard Specifications for Road and Bridge Construction.
2. A construction traffic control plan shall be submitted to and approved by Douglas County prior to issuance of construction permits in the County right-of-way.
3. Trench shall be braced or shored as necessary for the safety of the workers and protection of other utilities or structures in accordance with applicable local, state and federal safety regulations.
4. The trench width shall be confined to those minimum dimensions, which will permit proper installation and acceptable pipe loading, as established by current local, state and federal Safety regulations.
5. Backfill compaction requirements: Minimum density will be determined in accordance with AASHTO T 99 or T 180 as defined by CDOT Standard Specifications Section 203.07 and CDOT 703.03. Except for CLSM.
6. Full depth asphalt can be used as an alternative to base course.
7. Pavement edges shall be saw-cut. Edges shall be tack coated prior to patching.
8. All storm sewers shall be constructed so that a minimum cover is maintained to withstand AASHTO HS-20 loading on the pipe. The minimum cover to withstand live loading depends upon the pipe size, type and class, and soil bedding condition, but shall be not less than 1-foot at any point along the pipe. Other factors that affect the depth of the pipe are hydraulic grade line elevations, inlet depths, adjacent utilities or utility crossings, including water and sewer services lines along residential streets, and connections to existing storm sewer systems. The roadway subgrade, which supports the pavement section is typically plowed to a certain depth, moisture treated and compacted prior to the placement of the sub-base, base course, and surfacing. There are also instances where the subgrade material must be excavated and replaced or treated to a certain depth to mitigate swelling soils. These efforts can impact the storm sewer system if it has not been designed with adequate depth. The design engineer shall use the best information available, including pavement design or soils reports (if available) to ensure that storm sewer pipes have adequate depth.
9. Changes in design criteria will require compensating change in pipe design.
10. When pipe sewer is to be extended or replaced with pipe of different material, the connections shall conform to the detail shown on plans or be approved through Douglas County Engineering.
11. When two or more conduits are laid side-by-side, they shall be placed so that they are ½ outside diameter, or ½ outside span, or 3' apart, whichever is less. However, if end sections are used, the minimum spacing shall be 1' between the outside edge of end sections.
12. TRENCH INSTALLATION (per OSHA Standards):
    a. Trenches over 5 feet in depth shall be either shored or the trench walls shall be sloped no steeper than 3:1 to the angle of repose. If sloped, the bottom of the slope shall be a minimum of 1 foot above the top of the pipe.
    b. Shoring will be required when the bottom of the slope is more than 3 feet above the bottom of the trench.
    c. All sheeting or shoring to be removed.
13. CLSM may be used in place of Structural Backfill.
14. CLSM shall not exceed a strength over 1000 p.s.i.

REFERENCE: Douglas County Drainage Manual and Colorado Department of Transportation "M" Standards.

TO BE USED IN OPEN FIELDS OR PRIOR TO PAVING ROADS

PIPE INSTALLATION IN TRENCH NOTES

DOUGLAS COUNTY COLORADO

Issued: 05/2013
Revised:
Drawing No. **SP.46b**

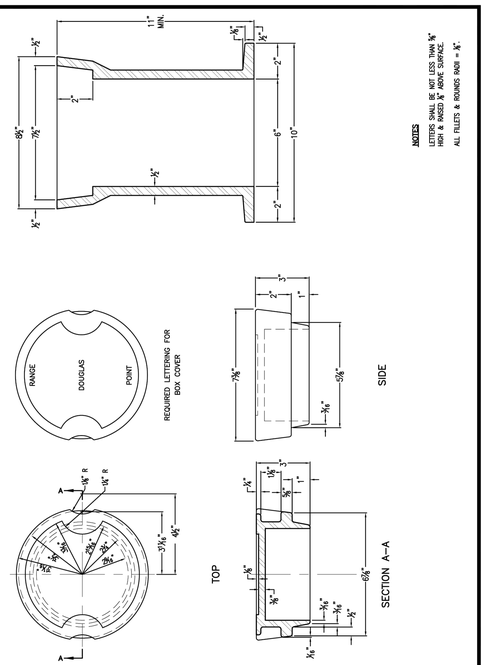
11" MIN.
¾"
2"
1"
8⅝"
7⅞"
6"
10"
½"
¾"
NOTES
LETTERS SHALL BE NOT LESS THAN ⅝" HIGH & RAISED ⅛" ABOVE SURFACE.
ALL FILLETS & ROUNDS RADII = ⅜".
RANGE
DOUGLAS
POINT
REQUIRED LETTERING FOR BOX COVER
SIDE
TOP
SECTION A-A
A
4⅝" R
3⅝"
2⅝"
3⅝"
2⅝"
3⅞"
4⅞"
⅝"
⅛"
⅜"
⅛"
⅜"
⅛"
⅜

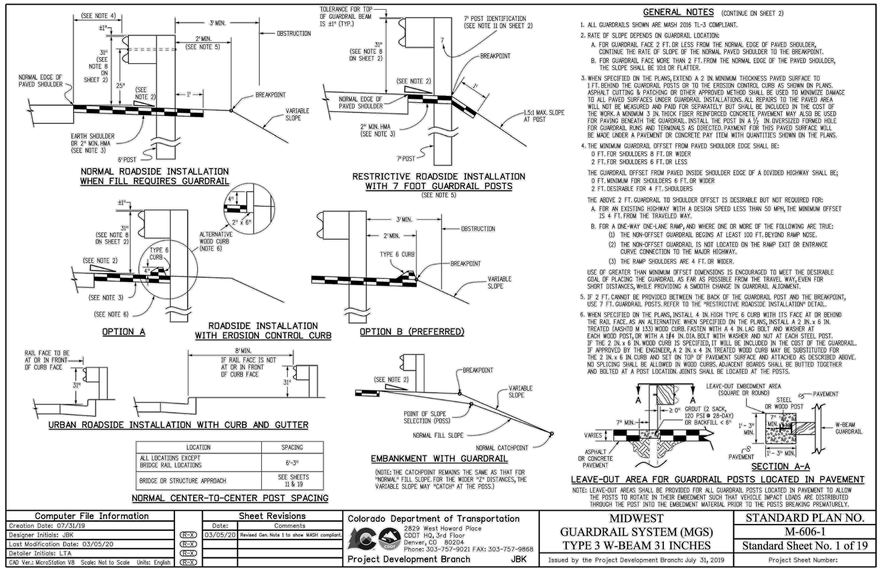

LOCATION	SPACING
ALL LOCATIONS EXCEPT BRIDGE RAIL LOCATIONS	6'-3"
BRIDGE OR STRUCTURE APPROACH	SEE SHEETS 11 & 19

NORMAL CENTER-TO-CENTER POST SPACING

GENERAL NOTES

(CONTINUE ON SHEET 2)

1. ALL GUARDRAILS SHOWN ARE MASH 2016 TL-3 COMPLIANT.
2. RATE OF SLOPE DEPENDS ON GUARDRAIL LOCATION:
   A. FOR GUARDRAIL FACE 2 FT.OR LESS FROM THE NORMAL EDGE OF PAVED SHOULDER, CONTINUE THE RATE OF SLOPE OF THE NORMAL PAVED SHOULDER TO THE BREAKPOINT.
   B. FOR GUARDRAIL FACE MORE THAN 2 FT.FROM THE NORMAL EDGE OF THE PAVED SHOULDER, THE SLOPE SHALL BE 10:1 OR FLATTER.
3. WHEN SPECIFIED ON THE PLANS,EXTEND A 2 IN.MINIMUM THICKNESS PAVED SURFACE TO 1 FT.BEYND THE GUARDRAIL POSTS OR TO THE EROSION CONTROL CURB AS SHOWN ON PLANS. ASPHALT CUTTING & PATCHING OR OTHER APPROVED METHOD SHALL BE USED TO MINIMIZE DAMAGE TO ALL PAVED SURFACES UNDER GUARDRAIL INSTALLATION.ALL REPAIRS TO THE PAVED AREA WILL NOT BE MEASURED AND PAID FOR SEPARATELY BUT SHALL BE INCLUDED IN THE COST OF THE WORK.A MINIMUM 3 IN.THICK FIBER REINFORCED CONCRETE PAVEMENT MAY ALSO BE USED FOR PAVING BENEATH THE GUARDRAIL.INSTALL THE POST IN A 1½ IN.OVERSIZED FORMED HOLE FOR GUARDRAIL RUNS AND TERMINALS AS DIRECTED.PAVEMENT FOR THIS PAVED SURFACE WILL BE MADE UNDER A PAVEMENT OR CONCRETE PAY ITEM WITH QUANTITIES SHOWN ON THE PLANS.
4. THE MINIMUM GUARDRAIL OFFSET FROM PAVED SHOULDER EDGE SHALL BE:
   0 FT.FOR SHOULDERS 8 FT.OR WIDER
   2 FT.FOR SHOULDERS 6 FT.OR LESS

   THE GUARDRAIL OFFSET FROM PAVED INSIDE SHOULDER EDGE OF A DIVIDED HIGHWAY SHALL BE:
   0 FT.MINIMUM FOR SHOULDERS 6 FT.OR WIDER
   2 FT.DESIRABLE FOR A 4 FT.SHOULDERS

   THE ABOVE 2 FT.GUARDRAIL TO SHOULDER OFFSET IS DESIRABLE BUT NOT REQUIRED FOR:
   A. FOR AN EXISTING HIGHWAY WITH A DESIGN SPEED LESS THAN 50 MPH,THE MINIMUM OFFSET IS 4 FT.FROM THE TRAVELED WAY.
   B. FOR A ONE-WAY ONE-LANE RAMP,AND WHERE ONE OR MORE OF THE FOLLOWING ARE TRUE:
      (1) THE NON-OFFSET GUARDRAIL BEGINS AT LEAST 100 FT.BEYND RAMP NOSE.
      (2) THE NON-OFFSET GUARDRAIL IS NOT LOCATED ON THE RAMP EXIT OR ENTRANCE CURVE CONNECTION TO THE MAIN HIGHWAY.
      (3) THE RAMP SHOULDERS ARE 4 FT.OR WIDER.

   USE OF GREATER THAN MINIMUM OFFSET DIMENSIONS IS ENCOURAGED TO MEET THE DESIRABLE GOAL OF PLACING THE GUARDRAIL AS FAR AS POSSIBLE FROM THE TRAVEL WAY,EVEN FOR SHORT DISTANCES,WHILE PROVIDING A SMOOTH CHANGE IN GUARDRAIL ALIGNMENT.
5. IF 2 FT.CANNOT BE PROVIDED BETWEEN THE BACK OF THE GUARDRAIL POST AND THE BREAKPOINT, USE 7 FT.GUARDRAIL POSTS.REFER TO THE "RESTRICTIVE ROADSIDE INSTALLATION" DETAIL.
6. WHEN SPECIFIED ON THE PLANS,INSTALL A 3N.HIGH TYPE 6 CURB WITH ITS FACE AT OR BEHIND THE RAIL FACE.AS AN ALTERNATIVE WHEN SPECIFIED ON THE PLANS,INSTALL A 2 IN.x 6 IN. TREATED LUMBER WITH A 13.5 WOOD CURB.FASTEN WITH A 4 IN.LAG BOLT AND WASHER AT EACH WOOD POST,OR WITH A 3/4 IN.DIA.BOLT WITH WASHER AND NUT AT EACH STEEL POST. IF THE 2 IN.x 6 IN.WOOD CURB IS SPECIFIED,IT WILL BE INCLUDED IN THE COST OF THE GUARDRAIL. IF APPROVED BY THE ENGINEER,A 2 IN.x 4 IN.TREATED WOOD CURB MAY BE SUBSTITUTED FOR THE 2 IN.x 6 IN.CURB AND SET ON TOP OF PAVEMENT SURFACE AND ATTACHED AS DESCRIBED ABOVE. NO SPLICING SHALL BE ALLOWED IN WOOD CURBS.ADJACENT BOARDS SHALL BE BUTTED TOGETHER AND BOLTED AT A POST LOCATION.JOINTS SHALL BE LOCATED AT THE POSTS.

NOTE: LEAVE-OUT AREAS SHALL BE PROVIDED FOR ALL GUARDRAIL POSTS LOCATED IN PAVEMENT TO ALLOW THE POSTS TO ROTATE IN THEIR EMBEDMENT SUCH THAT VEHICLE IMPACT LOADS ARE DISTRIBUTED THROUGH THE POST INTO THE EMBEDMENT MATERIAL PRIOR TO THE POSTS BREAKING PREMATURELY.

Computer File Information	
Creation Date: 07/31/19	
Designer Initials: JBK	
Last Modification Date: 03/05/20	
Detailer Initials: LTA	
CAD Ver.: MicroStation V8 Scale: Not to Scale Units: English	

Sheet Revisions		
Date:	Comments	
03/05/20	Revised Gen.Note 1 to show MASH compliant.	

Colorado Department of Transportation
2829 West Howard Place
CDOT HQ, 3rd Floor
Denver, CO 80204
Phone: 303-757-9021 FAX: 303-757-9868
Project Development Branch JBK

MIDWEST GUARDRAIL SYSTEM (MGS) TYPE 3 W-BEAM 31 INCHES

Issued by the Project Development Branch: July 31, 2019

STANDARD PLAN NO. M-606-1

Standard Sheet No. 1 of 19

Project Sheet Number:

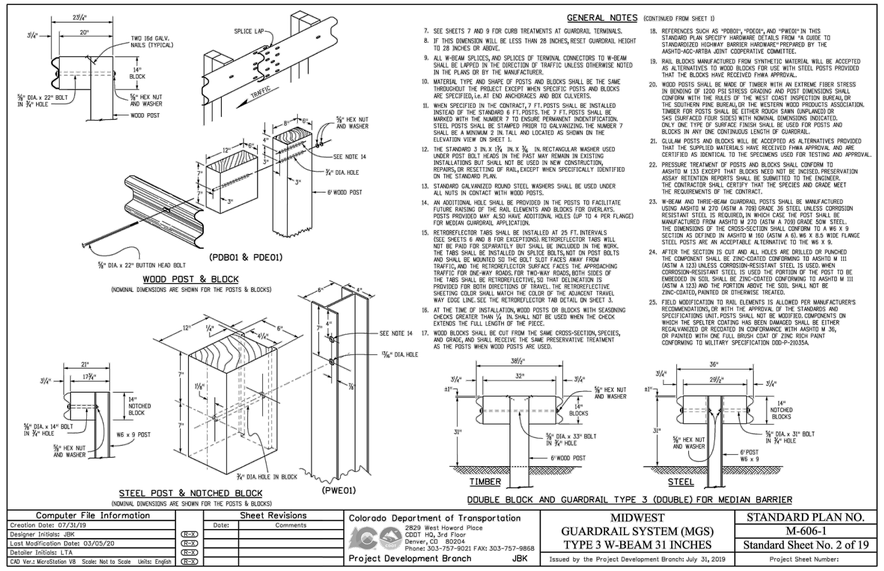

GENERAL NOTES

(CONTINUED FROM SHEET 1)

7. SEE SHEETS 7 AND 9 FOR CURB TREATMENTS AT GUARDRAIL TERMINALS.
8. IF THIS DIMENSION WILL BE LESS THAN 28 INCHES,RESET GUARDRAIL HEIGHT TO 28 INCHES OR ABOVE.
9. ALL W-BEAM SPLICES,AND SPLICES OF TERMINAL CONNECTORS TO W-BEAM SHALL BE LAPPED IN THE DIRECTION OF TRAFFIC UNLESS OTHERWISE NOTED IN THE PLANS OR BY THE MANUFACTURER.
10. MATERIAL TYPE AND SHAPE OF POSTS AND BLOCKS SHALL BE THE SAME THROUGHOUT THE PROJECT EXCEPT WHEN SPECIFIC POSTS AND BLOCKS ARE SPECIFIED,i.e.AT END ANCHORAGES AND BOX CULVERTS.
11. WHEN SPECIFIED IN THE CONTRACT,7 FT.POSTS SHALL BE INSTALLED INSTEAD OF THE STANDARD 6 FT.POSTS.THE 7 FT.POSTS SHALL BE MARKED WITH THE NUMBER 7 TO ENSURE PERMANENT INDENTIFICATION. STEEL POSTS SHALL BE STAMPED PRIOR TO GALVANIZING.THE NUMBER 7 SHALL BE A MINIMUM 2 IN.TALL AND LOCATED AS SHOWN ON THE ELEVATION VIEW ON SHEET 1.
12. THE STANDARD 3 IN.X 3/16 IN.X 3/16 IN.RECTANGULAR WASHER USED UNDER POST BOLT HEADS IN THE PAST MAY REMAIN IN EXISTING INSTALLATIONS BUT SHALL NOT BE USED IN NEW CONSTRUCTION, REPAIRS,OR RESETTING OF RAIL,EXCEPT WHEN SPECIFICALLY IDENTIFIED ON THE STANDARD PLAN.
13. STANDARD GALVANIZED ROUND STEEL WASHERS SHALL BE USED UNDER ALL NUTS IN CONTACT WITH WOOD POSTS.
14. AN ADDITIONAL HOLE SHALL BE PROVIDED IN THE POSTS TO FACILITATE FUTURE RAISING OF THE RAIL ELEMENTS AND BLOCKS FOR OVERLAYS. POSTS PROVIDED MAY ALSO HAVE ADDITIONAL HOLES (UP TO 4 PER FLANGE) FOR MEDIAN GUARDRAIL APPLICATION.
15. RETROREFLECTOR TABS SHALL BE INSTALLED AT 25 FT.INTERVALS (SEE SHEETS 6 AND 8 FOR EXCEPTIONS).RETROREFLECTOR TABS WILL NOT BE PAID FOR SEPARATELY BUT SHALL BE INCLUDED IN THE WORK. THE TABS SHALL BE INSTALLED ON SPLICE BOLTS,NOT ON POST BOLTS AND SHALL BE MOUNTED SO THE BOLT SLOT FACES AWAY FROM TRAFFIC,AND THE RETROREFLECTIVE SURFACE FACES THE APPROACHING TRAFFIC FOR ONE-WAY ROADS.FOR TWO-WAY ROADS,BOTH SIDES OF THE TABS SHALL BE RETROREFLECTIVE,SO THAT DELINEATION IS PROVIDED FOR BOTH DIRECTIONS OF TRAVEL.THE RETROREFLECTIVE SHEETING COLOR SHALL MATCH THE COLOR OF THE ADJACENT TRAVEL WAY EDGE LINE.SEE THE RETROREFLECTOR TAB DETAIL ON SHEET 3.
16. AT THE TIME OF INSTALLATION,WOOD POSTS OR BLOCKS WITH SEASONING CHECKS GREATER THAN 1/4 IN.SHALL NOT BE USED WHEN THE CHECK EXTENDS THE FULL LENGTH OF THE PIECE.
17. WOOD BLOCKS SHALL BE CUT FROM THE SAME CROSS-SECTION,SPECIES, AND GRADE,AND SHALL RECEIVE THE SAME PRESERVATIVE TREATMENT AS THE POSTS WHEN WOOD POSTS ARE USED.
18. REFERENCES SUCH AS "PDBO01","PDEO01",AND "PWEO01"IN THIS STANDARD PLAN SPECIFY HARDWARE DETAILS FROM "A GUIDE TO STANDARDIZED HIGHWAY BARRIER HARDWARE"PREPARED BY THE AASHTO-AGC-ARTBA JOINT COOPERATIVE COMMITTEE.
19. RAIL BLOCKS MANUFACTURED FROM SYNTHETIC MATERIAL WILL BE ACCEPTED AS ALTERNATIVES TO WOOD BLOCKS FOR USE WITH STEEL POSTS PROVIDED THAT THE BLOCKS HAVE RECEIVED FHWA APPROVAL.
20. WOOD POSTS SHALL BE MADE OF TIMBER WITH AN EXTREME FIBER STRESS IN BENDING OF 1200 PSI.STRESS GRADING AND POST DIMENSIONS SHALL CONFORM WITH THE RULES OF THE WEST COAST INSPECTION BUREAU,OR THE SOUTHERN PINE BUREAU,OR THE WESTERN WOOD PRODUCTS ASSOCIATION. TIMBER FOR POSTS SHALL BE EITHER ROUGH SAWN.UNPLANED OR S4S (SURFACED FOUR SIDES) WITH NOMINAL DIMENSIONS INDICATED. ONLY ONE TYPE OF SURFACE FINISH SHALL BE USED FOR POSTS AND BLOCKS IN ANY ONE CONTINUOUS LENGTH OF GUARDRAIL.
21. GULAM POSTS AND BLOCKS WILL BE ACCEPTED AS ALTERNATIVES PROVIDED THAT THE SUPPLIED MATERIALS HAVE RECEIVED FHWA APPROVAL AND ARE CERTIFIED AS IDENTICAL TO THE SPECIMENS USED FOR TESTING AND APPROVAL.
22. PRESSURE TREATMENT OF POSTS AND BLOCKS SHALL CONFORM TO AASHTO M 133 EXCEPT THAT BLOCKS NEED NOT BE INCISED.PRESERVATION ASSAY RETENTION REPORTS SHALL BE SUBMITTED TO THE ENGINEER. THE CONTRACTOR SHALL CERTIFY THAT THE SPECIES AND GRADE MEET THE REQUIREMENTS OF THE CONTRACT.
23. W-BEAM AND THRIE-BEAM GUARDRAIL POSTS SHALL BE MANUFACTURED USING AASHTO M 270 (ASTM A 709) GRADE 36 STEEL.UNLESS CORROSION RESISTANT STEEL IS REQUIRED,IN WHICH CASE THE POST SHALL BE MANUFACTURED FROM AASHTO M 270 (ASTM A 709) GRADE 50W STEEL. THE DIMENSIONS OF THE CROSS-SECTION SHALL CONFORM TO A W6 X 9 SECTION AS DEFINED IN AASHTO M 160 (ASTM A 6).W6 X 8.5 WIDE FLANGE STEEL POSTS ARE AN ACCEPTABLE ALTERNATIVE TO THE W6 X 9.
24. AFTER THE SECTION IS CUT AND ALL HOLES ARE DRILLED OR PUNCHED THE COMPONENT SHALL BE ZINC-COATED CONFORMING TO AASHTO M 111 (ASTM A 123).UNLESS CORROSION-RESISTANT STEEL IS USED.WHEN CORROSION-RESISTANT STEEL IS USED THE PORTION OF THE POST TO BE EMBEDDED IN SOIL SHALL BE ZINC-COATED CONFORMING TO AASHTO M 111 (ASTM A 123).AND THE PORTION ABOVE THE SOIL SHALL NOT BE ZINC-COATED,PAINTED OR OTHERWISE TREATED.
25. FIELD MODIFICATION TO RAIL ELEMENTS IS ALLOWED PER MANUFACTURER'S RECOMMENDATIONS,OR WITH THE APPROVAL OF THE STANDARDS AND SPECIFICATIONS UNIT.POSTS SHALL NOT BE MODIFIED.COMPONENTS ON WHICH THE SPELTER COATING HAS BEEN DAMAGED SHALL BE EITHER REGALVANIZED OR RECOATED IN CONFORMANCE WITH AASHTO M 36, OR PAINTED WITH ONE FULL BRUSH COAT OF ZINC RICH PAINT CONFORMING TO MILITARY SPECIFICATION DOD-P-20035A.

Computer File Information	
Creation Date: 07/31/19	
Designer Initials: JBK	
Last Modification Date: 03/05/20	
Detailer Initials: LTA	
CAD Ver.: MicroStation V8 Scale: Not to Scale Units: English	

Sheet Revisions	
Date:	Comments

Colorado Department of Transportation
2829 West Howard Place
CDOT HQ, 3rd Floor
Denver, CO 80204
Phone: 303-757-9021 FAX: 303-757-9868
Project Development Branch JBK

MIDWEST GUARDRAIL SYSTEM (MGS) TYPE 3 W-BEAM 31 INCHES

Issued by the Project Development Branch: July 31, 2019

STANDARD PLAN NO. M-606-1

Standard Sheet No. 2 of 19

Project Sheet Number:

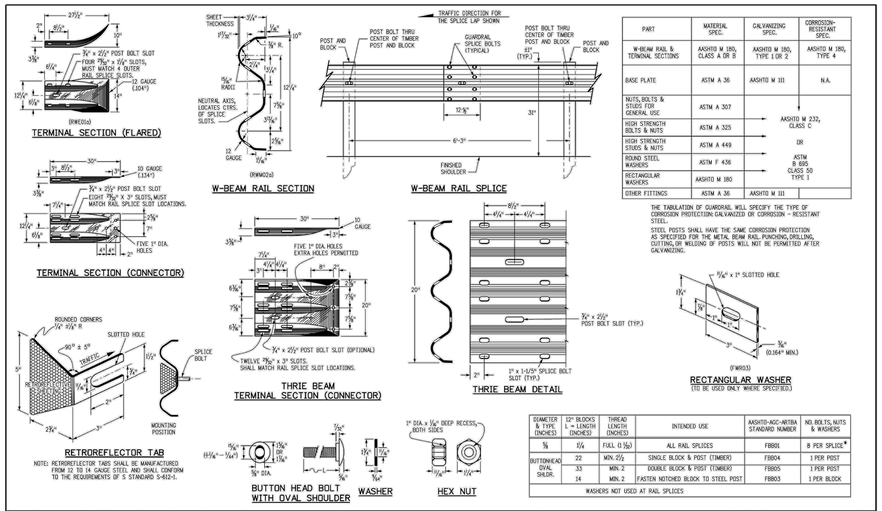

PART	MATERIAL SPEC.	GALVANIZING SPEC.	CORROSION-RESISTANT SPEC.
W-BEAM RAIL & TERMINAL SECTIONS	AASHTO M 180, CLASS A OR B	AASHTO M 180, TYPE I OR 2	AASHTO M 180, TYPE 4
BASE PLATE	ASTM A 36	AASHTO M 111	N.A.
NUTS,BOLTS & STUDS FOR GENERAL USE	ASTM A 307	AASHTO M 232, CLASS C OR ASTM B 695 CLASS 50 TYPE I	
HIGH STRENGTH BOLTS & NUTS	ASTM A 325		
HIGH STRENGTH STUDS & NUTS	ASTM A 449		
ROUND STEEL WASHERS	ASTM F 436		
RECTANGULAR WASHERS	AASHTO M 180		
OTHER FITTINGS	ASTM A 36	AASHTO M 111	

THE TABULATION OF GUARDRAIL WILL SPECIFY THE TYPE OF CORROSION PROTECTION:GALVANIZED OR CORROSION - RESISTANT STEEL.

STEEL POSTS SHALL HAVE THE SAME CORROSION PROTECTION AS SPECIFIED FOR THE METAL BEAM RAIL.PUNCHING,DRILLING, CUTTING,OR WELDING OF POSTS WILL NOT BE PERMITTED AFTER GALVANIZING.

DIAMETER & TYPE (INCHES)	12" BLOCKS L = LENGTH (INCHES)	THREAD LENGTH (INCHES)	INTENDED USE	AASHTO-AGC-ARTBA STANDARD NUMBER	NO.BOLTS,NUTS & WASHERS
5/8	11/4	FULL (1 1/2)	ALL RAIL SPLICES	FBB01	8 PER SPLICE*
BUTTONHEAD OVAL SHLDR.	22	MIN.2 1/2	SINGLE BLOCK & POST (TIMBER)	FBB04	1 PER POST
	33	MIN.2	DOUBLE BLOCK & POST (TIMBER)	FBB05	1 PER POST
	14	MIN.2	FASTEN NOTCHED BLOCK TO STEEL POST	FBB03	1 PER BLOCK

WASHERS NOT USED AT RAIL SPLICES

Computer File Information	
Creation Date: 07/31/19	
Designer Initials: JBK	
Last Modification Date: 03/05/20	
Detailer Initials: LTA	
CAD Ver.: MicroStation V8 Scale: Not to Scale Units: English	

Sheet Revisions	
Date:	Comments

Colorado Department of Transportation
2829 West Howard Place
CDOT HQ, 3rd Floor
Denver, CO 80204
Phone: 303-757-9021 FAX: 303-757-9868
Project Development Branch JBK

MIDWEST GUARDRAIL SYSTEM (MGS) TYPE 3 W-BEAM 31 INCHES

Issued by the Project Development Branch: July 31, 2019

STANDARD PLAN NO. M-606-1

Standard Sheet No. 3 of 19

Project Sheet Number:

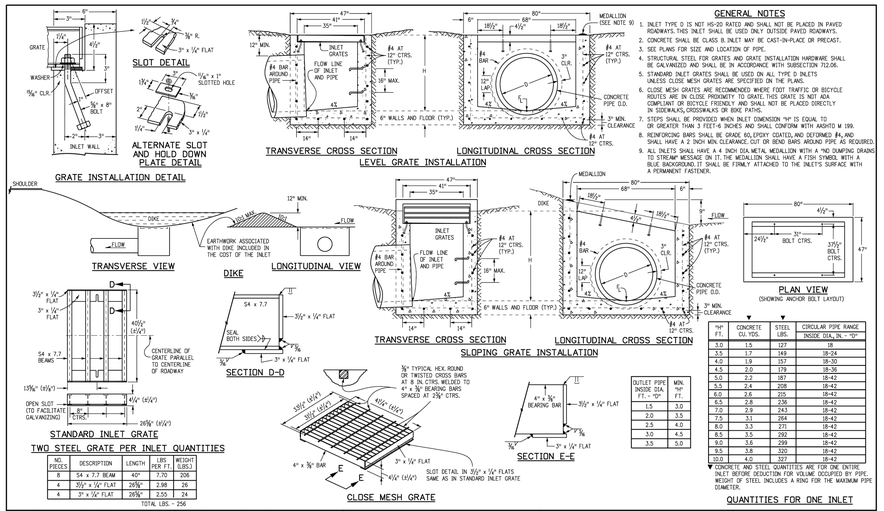

GENERAL NOTES

1. INLET TYPE D IS NOT HS-20 RATED AND SHALL NOT BE PLACED IN PAVED ROADWAYS.THIS INLET SHALL BE USED ONLY OUTSIDE PAVED ROADWAYS.
2. CONCRETE SHALL BE CLASS B.INLET MAY BE CAST-IN-PLACE OR PRECAST.
3. SEE PLANS FOR SIZE AND LOCATION OF PIPE.
4. STRUCTURAL STEEL FOR GRATES AND GRATE INSTALLATION HARDWARE SHALL BE GALVANIZED AND SHALL BE IN ACCORDANCE WITH SUBSECTION 712.06.
5. STANDARD INLET GRATES SHALL BE USED ON ALL TYPE D INLETS UNLESS CLOSE MESH GRATES ARE SPECIFIED ON THE PLANS.
6. CLOSE MESH GRATES ARE RECOMMENDED WHERE FOOT TRAFFIC OR BICYCLE ROUTES ARE IN CLOSE PROXIMITY TO GRATE.THIS GRATE IS NOT ADA COMPLIANT OR BICYCLE FRIENDLY AND SHALL NOT BE PLACED DIRECTLY IN SIDEWALKS,CROSSWALKS OR BIKE PATHS.
7. STEPS SHALL BE PROVIDED WHEN INLET DIMENSION "H" IS EQUAL TO OR GREATER THAN 3 FEET-6 INCHES AND SHALL CONFORM WITH AASHTO M 199.
8. REINFORCING BARS SHALL BE GRADE 60,EPOXY COATED,AND DEFORMED #4,AND SHALL HAVE A 2 INCH MIN.CLEARANCE.CUT OR BEND BARS AROUND PIPE AS REQUIRED.
9. ALL INLETS SHALL HAVE A 4 INCH DIA.METAL MEDALLION WITH A "NO DUMPING DRAINS TO STREAM"MESSAGE ON IT.THE MEDALLION SHALL HAVE A FISH SYMBOL WITH A BLUE BACKGROUND.IT SHALL BE FIRMLY ATTACHED TO THE INLETS SURFACE WITH A PERMANENT FASTENER.

"H" FT.	CONCRETE CU. YDS.	STEEL LBS.	CIRCULAR PIPE RANGE INSIDE DIA.,IN. "D"
3.0	1.5	127	18
3.5	1.7	149	18-24
4.0	1.9	157	18-30
4.5	2.0	179	18-36
5.0	2.2	187	18-42
5.5	2.4	208	18-42
6.0	2.6	215	18-42
6.5	2.8	236	18-42
7.0	2.9	243	18-42
7.5	3.1	264	18-42
8.0	3.3	271	18-42
8.5	3.5	292	18-42
9.0	3.6	299	18-42
9.5	3.8	320	18-42
10.0	4.0	327	18-42

▼ CONCRETE AND STEEL QUANTITIES ARE FOR ONE ENTIRE INLET BEFORE DEDUCTION FOR VOLUME OCCUPIED BY PIPE. WEIGHT OF STEEL INCLUDES A RING FOR THE MAXIMUM PIPE DIAMETER.

OUTLET PIPE INSIDE DIA. FT. - "D"	MIN. "H" FT.
1.5	3.0
2.0	3.5
2.5	4.0
3.0	4.5
3.5	5.0

NO. PIECES	DESCRIPTION	LENGTH	BS PER FT.	WEIGHT (LBS.)
8	54 x 7.7 BEAM	40"	7.70	208
4	35/8" x 1/4" FLAT	20 5/8"	2.98	26
4	3" x 1/4" FLAT	20 5/8"	2.55	24

TOTAL LBS. - 256

Computer File Information	
Creation Date: 07/31/19	
Designer Initials: JBK	
Last Modification Date: 07/31/19	
Detailer Initials: LTA	
CAD Ver.: MicroStation V8 Scale: Not to Scale Units: English	

Sheet Revisions	
Date:	Comments

Colorado Department of Transportation
2829 West Howard Place
CDOT HQ, 3rd Floor
Denver, CO 80204
Phone: 303-757-9021 FAX: 303-757-9868
Project Development Branch JBK

INLET, TYPE D

Issued by the Project Development Branch: July 31, 2019

STANDARD PLAN NO. M-604-11

Standard Sheet No. 1 of 1

Project Sheet Number:

UNTIL SUCH TIME AS THIS PLAN IS APPROVED BY THE APPROPRIATE REVIEWING AGENCIES, JR ENGINEERING APPROVES THEIR USE ONLY FOR THE PURPOSES DESIGNATED BY WRITTEN AUTHORIZATION.

PREPARED FOR
RAMPART RANGE METRO DISTRICT
2001 16TH STREET
SUITE 1700
DENVER, CO 80202
PHONE: 303-779-5710

J·R ENGINEERING
A Westrian Company
Centennial 303-740-9393 • Colorado Springs 719-593-2593
Fort Collins 970-491-9888 • www.jrengineering.com

No.	REVISION	BY	DATE
0	FOR APPROVAL	KJR	9/2/26

H-SCALE	N/A
V-SCALE	N/A
DATE	9/4/26
DESIGNED BY	N/A
DRAWN BY	KAC
CHECKED BY	

Know what's below. Call before you dig.

CITY OF LONE TREE

DATE

THESE CONSTRUCTION PLANS HAVE BEEN REVIEWED BY THE CITY OF LONE TREE FOR STREET AND DRAINAGE, SIGNAGE AND STRIPING IMPROVEMENTS ONLY.

ENGINEERING DIVISION ACCEPTANCE BLOCK

HILLCAMP TRAIL

STORM SEWER & ROADWAY DETAILS

ENGINEER'S STATEMENT

PREPARED UNDER MY SUPERVISION

KEVIN J. ROHRBOUGH, PE
COLORADO P.E. 48992
FOR AND ON BEHALF OF JR ENGINEERING, LLC

DATE

COLORADO REGISTERED PROFESSIONAL ENGINEER KEVIN J. ROHRBOUGH 48992 9/4/26

SHEET 39 OF 80

JOB NO. 15950.18

C:\Users\Crumpk_JR\ENGINEERING\DC\ACCDocs\JR Engineering\15950012\Project Files\15950018 Cabela Drive\Drawings\Sheet Drawings\15950018 Cabela Drive CoLT\15950018 DT01.dwg DT06, 9/8/2026 2:50:05 PM, crumpk

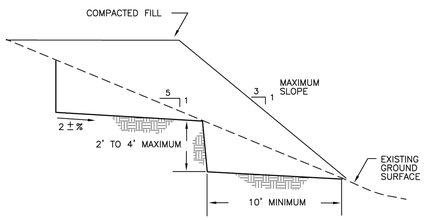

NOTES:
1) NATURAL SLOPES OF 20 PERCENT OR STEEPER ARE TO BE BENCHED PRIOR TO FILL PLACEMENT.
2) SLOPE BENCHES TO OUTSLOPE AT 2± PERCENT.

NOTE:
1. BLASTING OF BEDROCK IS NOT PERMITTED.

Benched Fill Detail Fig. 6

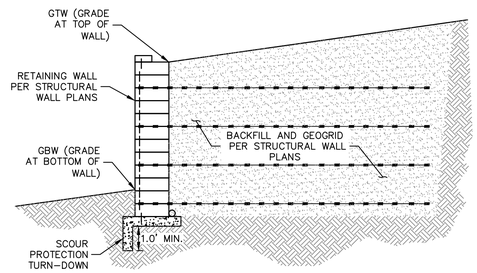

EASTERN WALL ABUTMENT DETAIL

SCALE: N.T.S.

NOTE:
1. SEE STRUCTURAL PLANS FOR ADDITIONAL WALL DETAIL.

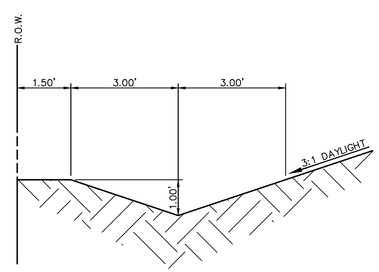

ROADSIDE SWALE DETAIL

SCALE: 1"=2'

(SEE SHEETS 9 AND 13 FOR PLAN VIEW LOCATION)

JR ENGINEERING, LLC
MESA TOPS ROAD ALIGNMENT
CTL|T Project No. DN52,378-115-L2

Know what's below. Call before you dig.

CITY OF LONE TREE

DATE

THESE CONSTRUCTION PLANS HAVE BEEN REVIEWED BY THE CITY OF LONE TREE FOR STREET AND DRAINAGE, SIGNAGE AND STRIPING IMPROVEMENTS ONLY.

ENGINEERING DIVISION ACCEPTANCE BLOCK

ENGINEER'S STATEMENT

PREPARED UNDER MY SUPERVISION

COLORADO REGISTERED PROFESSIONAL ENGINEER KEVIN J. ROHRBOUGH 48992 9/4/26

KEVIN ROHRBOUGH, PE DATE
COLORADO P.E. 48992
FOR AND ON BEHALF OF JR ENGINEERING, LLC

UNTIL SUCH TIME AS THESE DRAWINGS ARE APPROVED BY THE APPROPRIATE REVIEWING AGENCIES, JR ENGINEERING APPROVES THEIR USE ONLY FOR THE PURPOSES DESIGNATED BY WRITTEN AUTHORIZATION.

PREPARED FOR
RAMPART RANGE METRO DISTRICT
2001 16TH STREET
SUITE 1700
DENVER, CO 80202
PHONE: 303-779-5710

J·R ENGINEERING
A Westrian Company
Centennial 303-740-9393 • Colorado Springs 719-593-2593
Fort Collins 970-491-9888 • www.jrengineering.com

No.	REVISION	BY	DATE
0	FOR APPROVAL	KJR	9/2/26

H-SCALE	N/A
V-SCALE	N/A
DATE	9/4/26
DESIGNED BY	N/A
DRAWN BY	KAC
CHECKED BY	

HILLCAMP TRAIL

STORM SEWER & ROADWAY DETAILS

SHEET 40 OF 80

JOB NO. 15950.18

C:\Users\Crumpk.JRENGINEERING\DC\ACCDocs\JR Engineering\15950\12\Project Files\15950\18 Cabela Drive\Drawings\Sheet Drawings\15950\18 Cabela Drive ColLT\15950\18 DT01.dwg, DT07, 9/8/2026 2:46:10 PM, crumpk

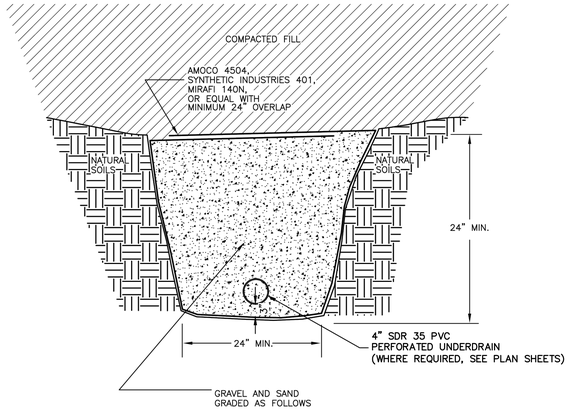

SIEVE SIZE	% PASSING
1 1/2"	100
3/4"	82–100
3/8"	64–80
#4	46–64
#8	34–52
#16	25–42
#30	12–30
#50	5–15
#100	1–3
#200	0–1

NOTE:
THE SAND AND GRAVEL GRADATION CAN BE MET BY MIXING COURSE CONCRETE AGGREGATE NO. 57 AND FINE CONCRETE AGGREGATE NO. 67 IN EQUAL PARTS BY WEIGHT.

JR ENGINEERING, LLC
MESA TOPS ROAD ALIGNMENT
CTL|T Project No. DN52,378-115-L2

Drainage Sub-Drain Fig. 7

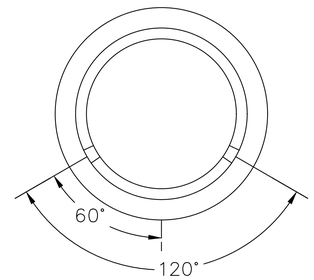

4" PERFORATED UNDERDRAIN DETAIL

NOTE:

1. 4" PVC PERFORATED PIPE MUST BE SDR 35 (NON FLEX-PIPE) TO MAINTAIN POSITIVE SLOPE, AND MINIMIZE LOW POINTS AND PONDING.

4" SDR 35 PVC PERFORATED DRAIN PIPE SPECS:

1/2"–5/8" OPENING (2" LONG SLOTS ACCEPTABLE)

5" O.C. HOLE SPACING.

JOINT TYPE: RUBBER GASKET OR GLUE ALLOWED. (PER MANUFACTURES RECOMMENDATIONS)

CLASS "C" FILTER MATERIAL PER CDOT SPECIFICATIONS.

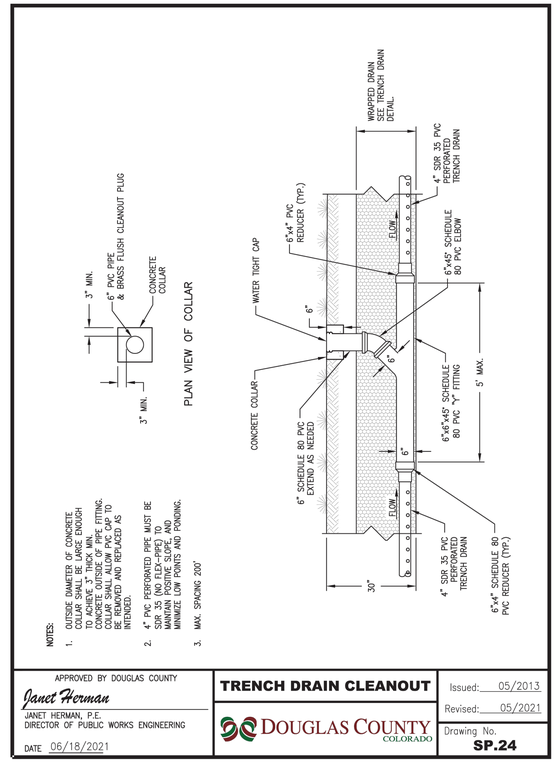

APPROVED BY DOUGLAS COUNTY
Janet Herman
JANET HERMAN, P.E.
DIRECTOR OF PUBLIC WORKS ENGINEERING
DATE 06/18/2021

TRENCH DRAIN CLEANOUT

DOUGLAS COUNTY COLORADO

Issued: 05/2013
Revised: 05/2021
Drawing No. **SP.24**

CLEANOUT DETAIL
NTS

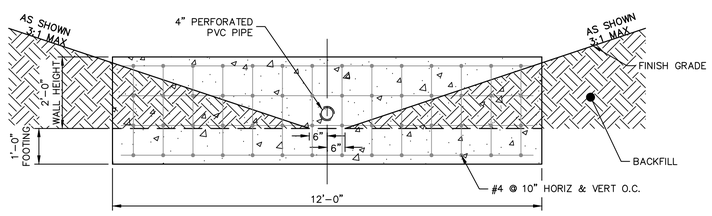

HEADWALL FOOTING
ELEVATION VIEW
N.T.S.

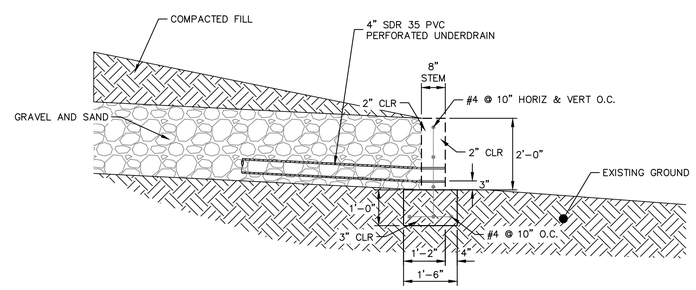

HEADWALL FOOTING
PROFILE VIEW
N.T.S.

Know what's below. Call before you dig.

CITY OF LONE TREE

DATE

THESE CONSTRUCTION PLANS HAVE BEEN REVIEWED BY THE CITY OF LONE TREE FOR STREET AND DRAINAGE, SIGNAGE AND STRIPING IMPROVEMENTS ONLY.

ENGINEERING DIVISION ACCEPTANCE BLOCK

ENGINEER'S STATEMENT
PREPARED UNDER MY SUPERVISION

KEVIN ROHRBOUGH, PE — DATE
COLORADO P.E. 48992
FOR AND ON BEHALF OF JR ENGINEERING, LLC

COLORADO REGISTERED KEVIN J. ROHRBOUGH 48992 9/4/26 PROFESSIONAL ENGINEER

UNTIL SUCH TIME AS THESE DRAWINGS ARE APPROVED BY THE APPROPRIATE REVIEWING AGENCIES, JR ENGINEERING APPROVES THEIR USE ONLY FOR THE PURPOSES DESIGNATED BY WRITTEN AUTHORIZATION.

PREPARED FOR
RAMPART RANGE METRO DISTRICT
2001 16TH STREET
SUITE 1700
DENVER, CO 80202
PHONE: 303-779-5710

J·R ENGINEERING
A Westrian Company
Centennial 303-740-9393 • Colorado Springs 719-593-2593
Fort Collins 970-491-9888 • www.jrengineering.com

No.	REVISION	BY	DATE
0	FOR APPROVAL	KJR	9/2/26

H-SCALE	N/A
V-SCALE	N/A
DATE	9/4/26
DESIGNED BY	N/A
DRAWN BY	KAC
CHECKED BY	

HILLCAMP TRAIL
STORM SEWER & ROADWAY DETAILS

SHEET 41 OF 80
JOB NO. 15950.18

C:\Users\CrumpK.JRENGINEERING\DC\ACCDocs\JR Engineering\15950.12\Project Files\15950.18 Cabela Drive\Drawings\Sheet Drawings\15950.18 Cabela Drive Col,T\15950.18 DT01.dwg, DT08, 9/8/2026 2:49:00 PM, crumpk

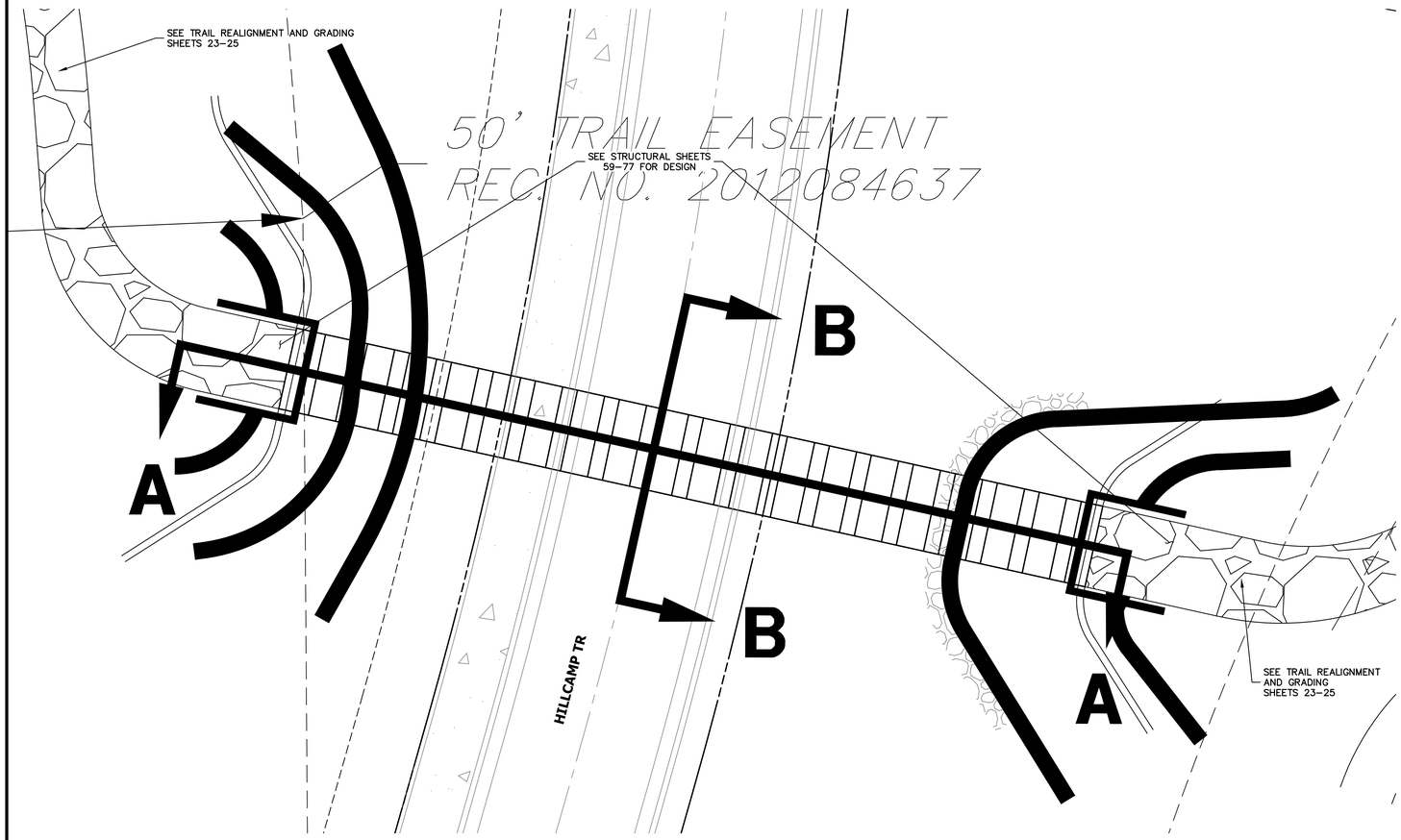

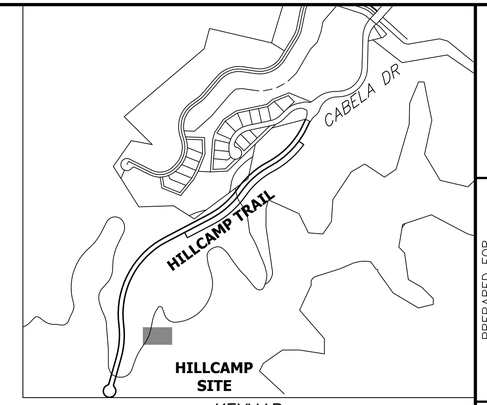

KEYMAP
SCALE: 1" = 600'

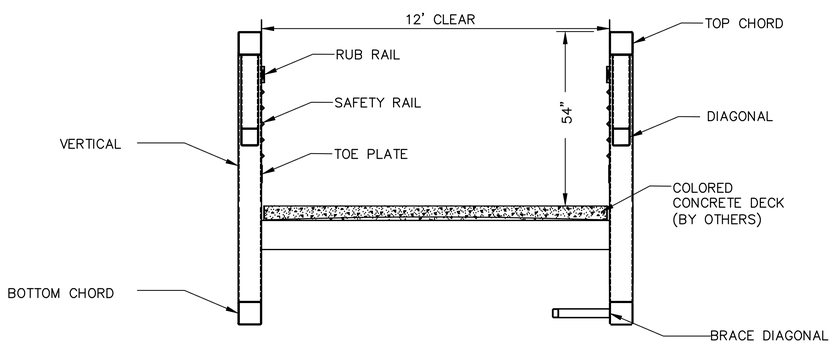

SECTION B-B

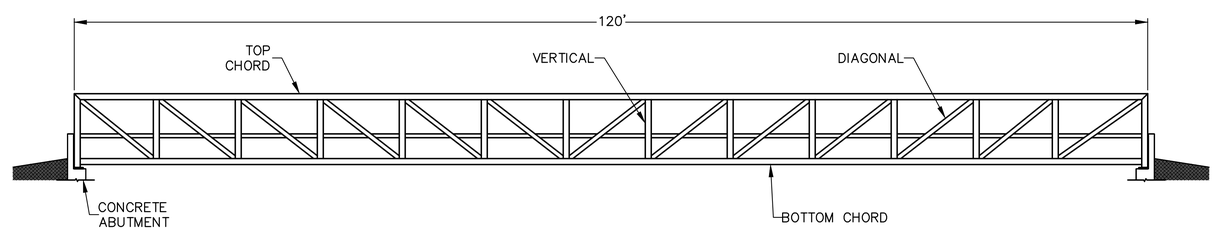

SECTION A-A
BRIDGE ELEVATION

10 5 0 10 20
ORIGINAL SCALE: 1" = 10'

CITY OF LONE TREE

DATE

THESE CONSTRUCTION PLANS HAVE BEEN REVIEWED BY THE CITY OF LONE TREE FOR STREET AND DRAINAGE, SIGNAGE AND STRIPING IMPROVEMENTS ONLY.

ENGINEERING DIVISION ACCEPTANCE BLOCK

Know what's below. Call before you dig.

ENGINEER'S STATEMENT
PREPARED UNDER MY SUPERVISION

KEVIN ROHRBOUGH, PE
COLORADO P.E. 48992
FOR AND ON BEHALF OF JR ENGINEERING, LLC

DATE

COLORADO REGISTERED KEVIN J. ROHRBOUGH 48992 9/4/26 PROFESSIONAL ENGINEER

NOTES

1. BRIDGE IS CONCEPTUAL. CONTRACTOR TO PROVIDE SHOP DRAWING TO PROJECT TEAM FOR REVIEW AND APPROVAL.
2. CONTRACTOR TO PROVIDE STRUCTURAL CALCS.
3. REFERENCE ALL STRUCTURAL & LANDSCAPE ARCHITECT DRAWINGS.

UNTIL SUCH TIME AS THESE DRAWINGS ARE APPROVED BY THE APPROPRIATE REVIEWING AGENCIES, JR ENGINEERING APPROVES THEIR USE ONLY FOR THE PURPOSES DESIGNATED BY WRITTEN AUTHORIZATION.

PREPARED FOR
RAMPART RANGE METRO DISTRICT
8390 E CRESCENT PKWY
SUITE 300
GREENWOOD VILLAGE, CO 80111
PHONE: 303-779-5710

J·R ENGINEERING
A Westrian Company
Centennial 303-740-9393 • Colorado Springs 719-593-2593
Fort Collins 970-491-9888 • www.jrengineering.com

No.	REVISION	BY	DATE
1	1ST COLT SUBMITTAL	KJR	3/20/25
2	2ND COLT SUBMITTAL	KJR	8/15/25
3	3RD COLT SUBMITTAL	KJR	11/20/25

H-SCALE	1"=10'
V-SCALE	N/A
DATE	3/27/26
DESIGNED BY	KAC
DRAWN BY	KF
CHECKED BY	

HILLCAMP TRAIL

BRIDGE DETAILS

SHEET 42 OF 77

JOB NO. 15950.18

C:\Users\Crumpk_JR\ENGINEERING\DC\ACCDocs\JR Engineering\15950012\Project Files\15950018 Cabela Drive\Drawings\Sheet Drawings\15950018 Cabela Drive Ped Bridge\Wall Plans.dwg, Wall, 9/8/2026 2:50:39 PM, crumpk

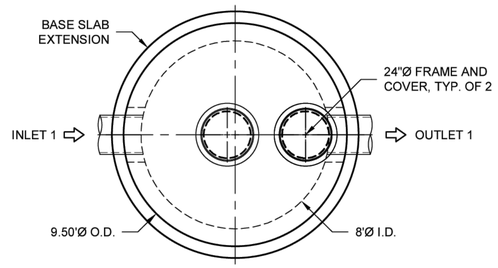

1 2 **PLAN VIEW**
INTERNALS NOT SHOWN

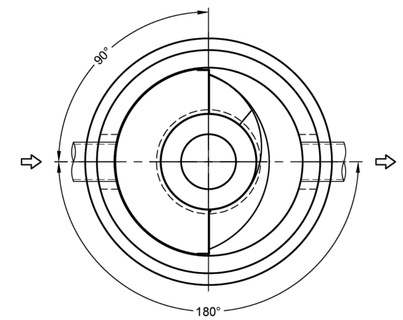

1 2 **PLAN VIEW FOR PIPE ORIENTATION**
TOP SLAB NOT SHOWN

INTERNAL COMPONENTS TO BE INSTALLED ON SITE BY CONTECH FIELD CONSULTANT. PLEASE CONTACT CONTECH FOR CURRENT INSTALLATION LEAD TIME

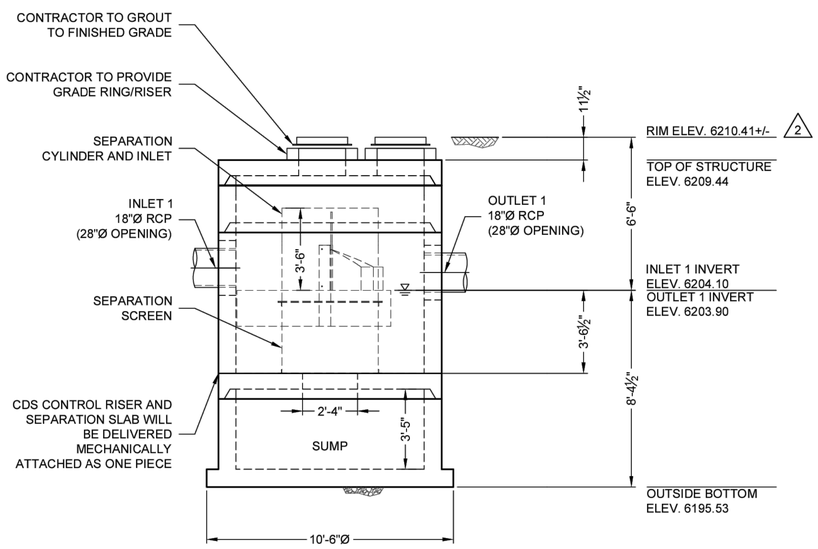

1 2 **ELEVATION VIEW**

MATERIAL LIST (PROVIDED BY CONTECH)

COUNT	DESCRIPTION	INSTALLED BY
1	4030-8 CONCENTRIC FIBERGLASS INSERT	CONTRACTOR
1	4030, 2400 micron, 4.1' O.D. x 3.04' SCREEN, GREEN FLANGE UP	CONTRACTOR
1	HARDWARE KIT	CONTRACTOR
1	SEALANT FOR JOINTS	CONTRACTOR
2	24"Ø X 4" FRAME AND COVER, EJ #41600389, OR EQUIV.	CONTRACTOR

* SEE HYDRAULIC SHEAR PLATE DETAIL

SITE DESIGN DATA

WATER QUALITY FLOW RATE	3.88 CFS
PEAK FLOW RATE	7.23 CFS
RETURN PERIOD OF PEAK FLOW	100 YRS

GENERAL NOTES
1. CONTECH TO PROVIDE ALL MATERIALS UNLESS NOTED OTHERWISE.
2. FOR FABRICATION DRAWINGS WITH DETAILED STRUCTURE DIMENSIONS AND WEIGHT, PLEASE CONTACT YOUR CONTECH ENGINEERED SOLUTIONS LLC REPRESENTATIVE. www.ContechES.com
3. CDS WATER QUALITY STRUCTURE SHALL BE IN ACCORDANCE WITH ALL DESIGN DATA AND INFORMATION CONTAINED IN THIS DRAWING. CONTRACTOR TO CONFIRM STRUCTURE MEETS REQUIREMENTS OF PROJECT.
4. STRUCTURE SHALL MEET AASHTO HS-20 LOAD RATING, ASSUMING EARTH COVER OF 0' - 2', AND GROUNDWATER ELEVATION AT, OR BELOW, THE OUTLET PIPE INVERT ELEVATION. ENGINEER OF RECORD TO CONFIRM ACTUAL GROUNDWATER ELEVATION. CASTINGS SHALL MEET AASHTO M306 AND BE CAST WITH THE CONTECH LOGO.
5. IF REQUIRED, PVC HYDRAULIC SHEAR PLATE IS PLACED ON SHELF AT BOTTOM OF SCREEN CYLINDER. REMOVE AND REPLACE AS NECESSARY DURING MAINTENANCE CLEANING.
6. CDS STRUCTURE SHALL BE PRECAST CONCRETE CONFORMING TO ASTM C-478 AND AASHTO LOAD FACTOR DESIGN METHOD.

INSTALLATION NOTES
A. ANY SUB-BASE, BACKFILL DEPTH, AND/OR ANTI-FLOTATION PROVISIONS ARE SITE-SPECIFIC DESIGN CONSIDERATIONS AND SHALL BE SPECIFIED BY ENGINEER OF RECORD.
B. CONTRACTOR TO PROVIDE EQUIPMENT WITH SUFFICIENT LIFTING AND REACH CAPACITY TO LIFT AND SET THE CDS MANHOLE STRUCTURE.
C. CONTRACTOR TO INSTALL JOINT SEALANT BETWEEN ALL STRUCTURE SECTIONS AND ASSEMBLE STRUCTURE.
D. CONTRACTOR TO PROVIDE, INSTALL, AND GROUT INLET AND OUTLET PIPE(S). MATCH PIPE INVERTS WITH ELEVATIONS SHOWN. ALL PIPE CENTERLINES TO MATCH PIPE OPENING CENTERLINES.
E. CONTRACTOR TO TAKE APPROPRIATE MEASURES TO ASSURE UNIT IS WATER TIGHT, HOLDING WATER TO FLOWLINE INVERT MINIMUM. IT IS SUGGESTED THAT ALL JOINTS BELOW PIPE INVERTS ARE GROUTED.

STRUCTURE WEIGHT
APPROXIMATE HEAVIEST PICK = 26500 LBS.
STRUCTURE IS DELIVERED IN 4 PIECES

MAX FOOTPRINT = 10.50'Ø

CONTECH
CONTRACT
DRAWING

RNK-HNCO
LAYOUT 1H

The design and information shown on this drawing is provided as a service to the project owner, engineer, and contractor by CONTECH Construction Products Inc. or its subsidiaries (collectively "CONTECH"). Neither this drawing, nor any part thereof, may be used, reproduced or modified in any manner without the written consent of CONTECH. Failure to comply is done at the user's own risk and CONTECH expressly disclaims any liability or responsibility for such use.

If discrepancies between the supplied information upon which the drawing is based and actual field conditions are encountered as site work progresses, these must be immediately brought to the attention of CONTECH personnel so that the design can be reviewed. Designs based on missing incomplete or inaccurate information supplied by others, are not warranted by CONTECH.

MARK	DATE	REVISION DESCRIPTION	BY
2	3/31/2026	RIM ELEVATION UPDATED	EDM
1	2/24/2026	MODEL & LAYOUT CHG. PER EOR	EDM

CDS4030-8-C - 885836-010
HILLCAMP TRAIL
LONE TREE, CO
SITE DESIGNATION: HDS-A1

CONTECH® ENGINEERED SOLUTIONS LLC
www.ContechES.com
5070 Greenwood Plaza Blvd., Suite 330, Greenwood Village, CO 80111
720-587-2700 720-587-2505 FAX
CDS®
FOR PATENT INFORMATION, GO TO www.ContechES.com/IP

DATE: 1/30/2026	
DESIGNED: STS	DRAWN: EDM
CHECKED: STS	APPROVED: STS
PROJECT No.: 885836	SEQUENCE No.: 010
SHEET: 1 OF 1	

UNTIL SUCH TIME AS THESE DRAWINGS ARE APPROVED BY THE APPROPRIATE REVIEWING AGENCIES, JR ENGINEERING APPROVES THEIR USE ONLY FOR THE PURPOSES DESIGNATED BY WRITTEN AUTHORIZATION.

PREPARED FOR
RAMPART RANGE METRO DISTRICT
8390 E CRESCENT PKWY
SUITE 300
GREENWOOD VILLAGE, CO 80111
PHONE: 303-779-5710

J·R ENGINEERING
A Westrian Company
Centennial 303-740-9393 • Colorado Springs 719-593-2593
Fort Collins 970-491-9888 • www.jrengineering.com

No.	REVISION	BY	DATE
1	1ST CoLT SUBMITTAL	KJR	3/20/25
2	2ND CoLT SUBMITTAL	KJR	8/15/25
3	3RD CoLT SUBMITTAL	KJR	11/20/25
4	4TH CoLT SUBMITTAL	KJR	3/27/26

H-SCALE	N/A
V-SCALE	N/A
DATE	3/27/26
DESIGNED BY	N/A
DRAWN BY	GDC
CHECKED BY	

HILLCAMP TRAIL
HYDRODYNAMIC SPEARATOR A DETAILS

SHEET 43 OF 77
JOB NO. 15950.18

C:\Users\CrumpK.JRENGINEERING\DC\ACCDocs\JR Engineering\15950\12\Project Files\15950\18 Cabela Drive\Drawings\Sheet Drawings\15950\18 Cabela Drive CoLT\15950\18 Hydrodynamic Separator A Details.dwg, DT01, 9/8/2026 2:49:00 PM, crumpk
\\QUIKRETE.NET\CONTECH\MERLIN\PROJECT\ACTIVE\885800\885836\885836\10-CDS\DRAWINGS\885836-10-CDS4030-8-C-CONFAB.DWG 3/31/2026 9:42 AM

V1600-3 V1610-3 Assembly

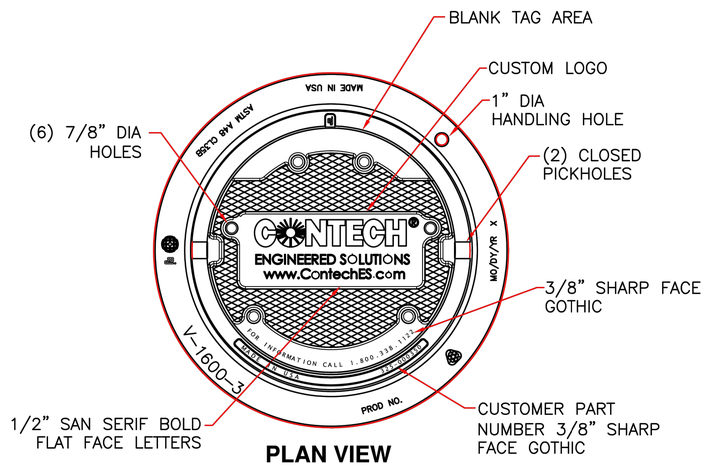

PLAN VIEW

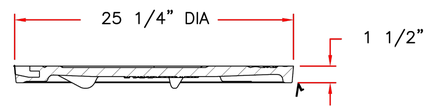

COVER SECTION

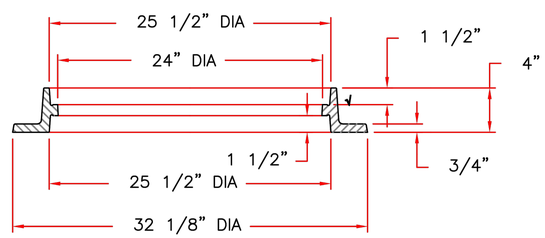

RING SECTION

Product Number

41600389

Design Features

-Materials
Frame
Gray Iron (CL35B)
Cover
Gray Iron (CL35B)

-Design Load
Heavy Duty
-Open Area
n/a
-Coating
Undipped
- √ Designates Machined Surface

Certification

-
- ASTM A48
-
-Country of Origin: USA

Major Components

41600310
41600374

Drawing Revision

05/02/2008 Designer: DEW
6/20/2017 Revised By: DAE

Disclaimer

Weights (lbs./kg) dimensions (inches/mm) and drawings provided for your guidance. We reserve the right to modify specifications without prior notice.

CONFIDENTIAL: This drawing is the property of EJ GROUP, Inc., and embodies confidential information, registered marks, patents, trade secret information, and/or know how that is the property of EJ GROUP, Inc. Copyright © 2012 EJ GROUP, Inc. All rights reserved.

Contact

800 626 4653
ejco.com

UNTIL SUCH TIME AS THESE DRAWINGS ARE APPROVED BY THE APPROPRIATE REVIEWING AGENCIES, JR ENGINEERING APPROVES THEIR USE ONLY FOR THE PURPOSES DESIGNATED BY WRITTEN AUTHORIZATION.

PREPARED FOR
RAMPART RANGE METRO DISTRICT
8390 E CRESCENT PKWY
SUITE 300
GREENWOOD VILLAGE, CO 80111
PHONE: 303-779-5710

J·R ENGINEERING
A Westrian Company
Centennial 303-740-9393 • Colorado Springs 719-593-2593
Fort Collins 970-491-9888 • www.jrengineering.com

No.	REVISION	BY	DATE
1	1ST CoLT SUBMITTAL	KJR	3/20/25
2	2ND CoLT SUBMITTAL	KJR	8/15/25
3	3RD CoLT SUBMITTAL	KJR	11/20/25
4	4TH CoLT SUBMITTAL	KJR	3/27/26

H-SCALE	N/A
V-SCALE	N/A
DATE	3/27/26
DESIGNED BY	N/A
DRAWN BY	GDC
CHECKED BY	

HILLCAMP TRAIL

HYDRODYNAMIC SPEARATOR
A DETAILS

SHEET 44 OF 77

JOB NO. 15950.18

C:\Users\Crumpk.JRENGINEERING\DC\ACCDocs\JR Engineering\15950\12\Project Files\15950\18 Cabela Drive\Drawings\Sheet Drawings\15950\18 Cabela Drive CoLT\15950\18 Hydrodynamic Separator A Details.dwg, DT02, 9/8/2026 2:47:39 PM, crumpk

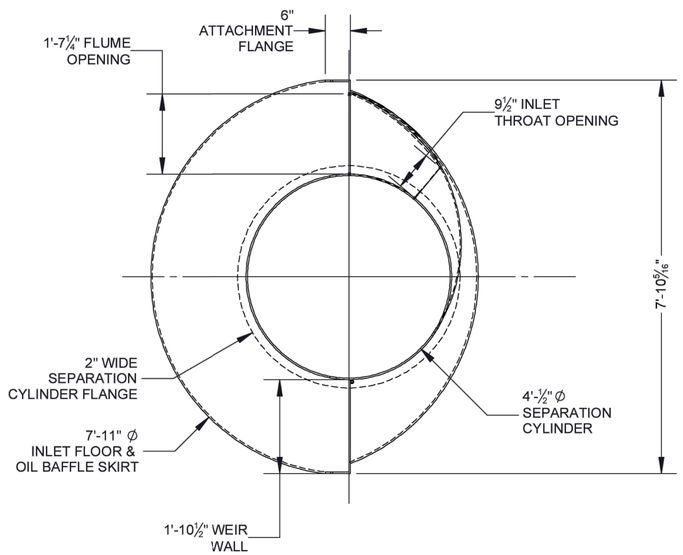

PLAN VIEW

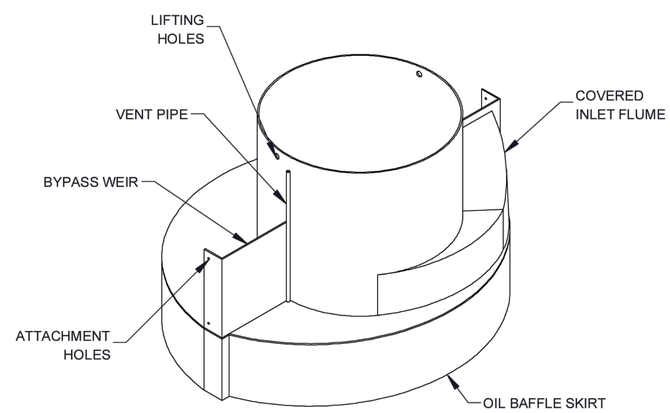

ASSEMBLY TOP VIEW

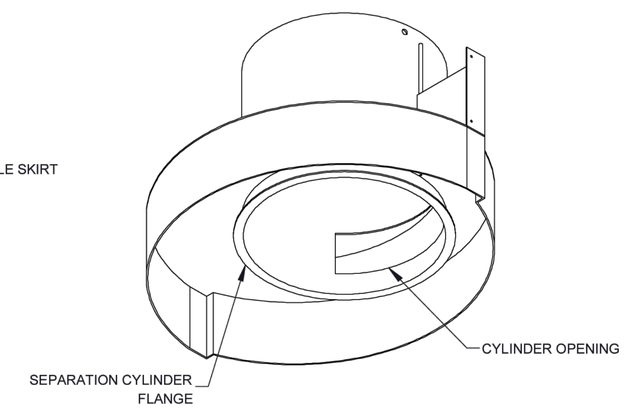

ASSEMBLY BOTTOM VIEW

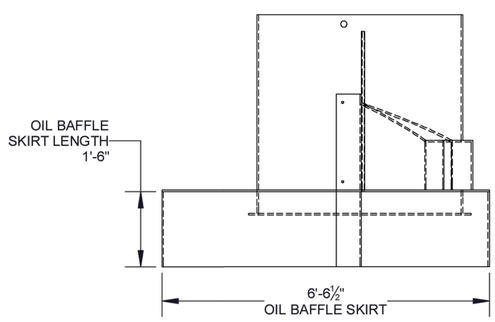

ELEVATION VIEW

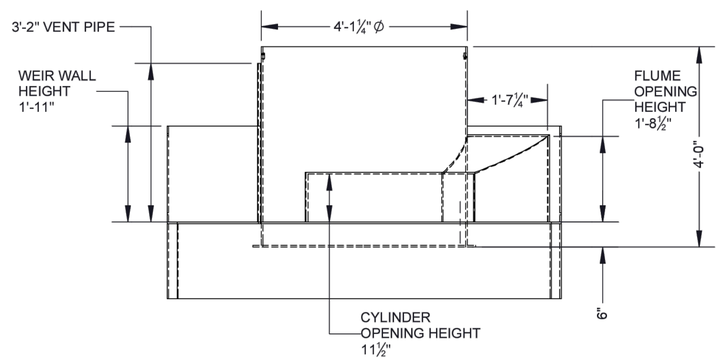

SIDE VIEW

NOTES:
1. SEE CDS UNIT ASSEMBLY AND INSTALLATION GUIDE FOR ADDITIONAL INFORMATION

The design and information shown on this drawing is provided as a service to the project owner, engineer and contractor by Contech Engineered Solutions LLC. or one of its affiliated companies ("Contech"). Neither this drawing, nor any part thereof, may be used, reproduced or modified in any manner without the prior written consent of Contech. Failure to comply is done at the user's own risk and Contech expressly disclaims any liability or responsibility for such use.

If discrepancies between the supplied information upon which the drawing is based and actual field conditions are encountered as site work progresses, these discrepancies must be reported to Contech immediately for re-evaluation of the design. Contech accepts no liability for designs based on missing, incomplete or inaccurate information supplied by others.

CDS®

THIS PRODUCT MAY BE PROTECTED BY ONE OR MORE OF THE FOLLOWING U.S. PATENTS: 5,788,849; 6,641,720; 6,911,006; 6,991,769; RELATED FOREIGN PATENTS, OR OTHER PATENTS PENDING.

CONTECH®
ENGINEERED SOLUTIONS LLC
www.ContechES.com
9025 Centre Pointe Dr., Suite 400, West Chester, OH 45069
800-338-1122 513-645-7000 513-645-7993 FAX

REFERENCE DETAIL
CDS 4030-8-C
CONCENTRIC INTERNALS

THIRD ANGLE PROJECTION

UNLESS OTHERWISE SPECIFIED
DIMENSIONS ARE IN INCHES

TOLERANCES:
FRACTIONAL ± 1/16
ANGLES ± 1 DEGREE
TWO PLACE DECIMAL ± 0.06
THREE PLACE DECIMAL ± 0.030

PART NUMBER:	325-000791
APPROVED BY: M. BROOKS	DRAWN BY: C. CALDON
APPROVED BY DATE: 2022.03.08	DRAWN BY DATE: 2022.02.15 / REV: B
SCALE: N/A	SHEET 1 OF 1

UNTIL SUCH TIME AS THESE DRAWINGS ARE APPROVED BY THE APPROPRIATE REVIEWING AGENCIES, JR ENGINEERING APPROVES THEIR USE ONLY FOR THE PURPOSES DESIGNATED BY WRITTEN AUTHORIZATION.

PREPARED FOR
RAMPART RANGE METRO DISTRICT
8390 E CRESCENT PKWY
SUITE 300
GREENWOOD VILLAGE, CO 80111
PHONE: 303-779-5710

J·R ENGINEERING
A Westrian Company
Centennial 303-740-9393 • Colorado Springs 719-593-2593
Fort Collins 970-491-9888 • www.jrengineering.com

No.	REVISION	BY	DATE
1	1ST CoLT SUBMITTAL	KJR	3/20/25
2	2ND CoLT SUBMITTAL	KJR	8/15/25
3	3RD CoLT SUBMITTAL	KJR	11/20/25
4	4TH CoLT SUBMITTAL	KJR	3/27/26

H-SCALE	N/A
V-SCALE	N/A
DATE	3/27/26
DESIGNED BY	N/A
DRAWN BY	GDC
CHECKED BY	

HILLCAMP TRAIL

HYDRODYNAMIC SPEARATOR
A DETAILS

JOB NO. 15950.18

C:\Users\CrumpK.JRENGINEERING\DC\ACCDocs\JR Engineering\15950\12\Project Files\15950\18 Cabela Drive\Drawings\Sheet Drawings\15950\18 Cabela Drive CoLT\15950\18 hydrodynamic Separator A Details.dwg, DT03, 9/8/2026 2:47:20 PM, crumpk

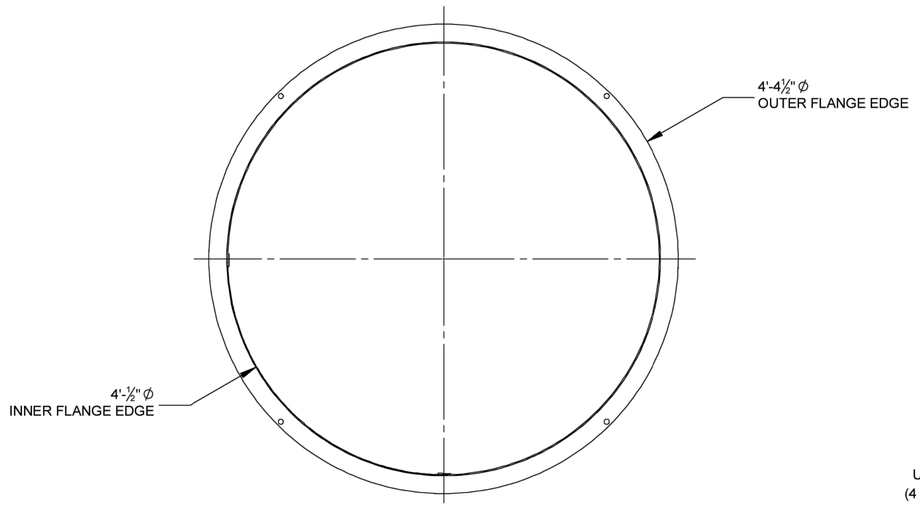

TOP VIEW

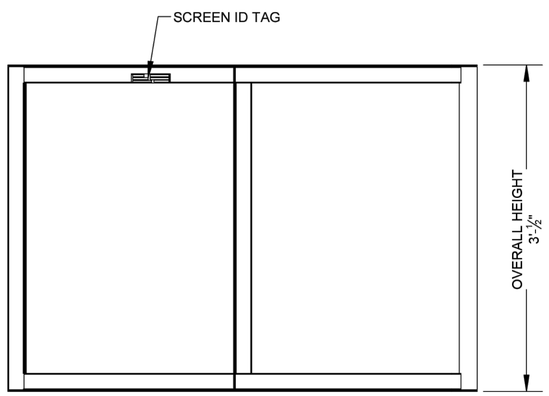

SIDE VIEW

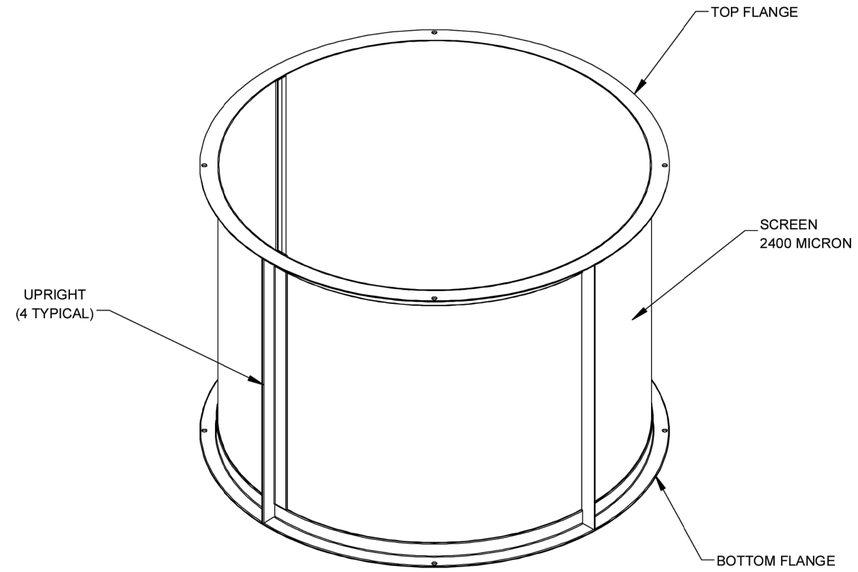

ISOMETRIC VIEW

NOTES:
1. SEE SITE SPECIFIC DRAWINGS FOR REQUIRED SCREEN ASSEMBLY
2. SEE CDS UNIT ASSEMBLY AND INSTALLATION GUIDE FOR ADDITIONAL INFORMATION

The design and information shown on this drawing is provided as a service to the project owner, engineer and contractor by Contech Engineered Solutions LLC, or one of its affiliated companies ("Contech"). Neither this drawing, nor any part thereof, may be used, reproduced or modified in any manner without the prior written consent of Contech. Failure to comply is done at the user's own risk and Contech expressly disclaims any liability or responsibility for such use.

If discrepancies between the supplied information upon which the drawing is based and actual field conditions are encountered as site work progresses, these discrepancies must be reported to Contech immediately for re-evaluation of the design. Contech accepts no liability for designs based on missing, incomplete or inaccurate information supplied by others.

CDS®

THIS PRODUCT MAY BE PROTECTED BY ONE OR MORE OF THE FOLLOWING U.S. PATENTS: 6,706,648; 6,641,720; 6,511,606; 6,521,110; RELATED FOREIGN PATENTS, OR OTHER PATENTS PENDING.

CONTECH® ENGINEERED SOLUTIONS LLC
www.ContechES.com
9025 Centre Pointe Dr., Suite 400, West Chester, OH 45069
800-338-1122 513-645-7000 513-645-7993 FAX

REFERENCE DETAIL
SCREEN ASSEMBLY
CDS4030 2400 MICRON

THIRD ANGLE PROJECTION

UNLESS OTHERWISE SPECIFIED DIMENSIONS ARE IN INCHES
TOLERANCES:
FRACTIONAL ± 1/16
ANGLES ± 1 DEGREE
TWO PLACE DECIMAL ± 0.06
THREE PLACE DECIMAL ± 0.030

PART NUMBER: 335-000385		
APPROVED BY: M. BROOKS	DRAWN BY: C. CALDON	
APPROVED BY DATE: 2021.12.13	DRAWN BY DATE: 2022.02.16	REV: C
SCALE: N/A	SHEET 1 OF 1	

UNTIL SUCH TIME AS THESE DRAWINGS ARE APPROVED BY THE APPROPRIATE REVIEWING AGENCIES, JR ENGINEERING APPROVES THEIR USE ONLY FOR THE PURPOSES DESIGNATED BY WRITTEN AUTHORIZATION.

PREPARED FOR
RAMPART RANGE METRO DISTRICT
8390 E CRESCENT PKWY
SUITE 300
GREENWOOD VILLAGE, CO 80111
PHONE: 303-779-5710

J·R ENGINEERING
A Westrian Company
Centennial 303-740-9393 • Colorado Springs 719-593-2593
Fort Collins 970-491-9888 • www.jrengineering.com

No.	REVISION	BY	DATE
1	1ST CoLT SUBMITTAL	KJR	3/20/25
2	2ND CoLT SUBMITTAL	KJR	8/15/25
3	3RD CoLT SUBMITTAL	KJR	11/20/25
4	4TH CoLT SUBMITTAL	KJR	3/27/26

H-SCALE	N/A
V-SCALE	N/A
DATE	3/27/26
DESIGNED BY	N/A
DRAWN BY	GDC
CHECKED BY	

HILLCAMP TRAIL

HYDRODYNAMIC SPERATOR
A DETAILS

SHEET 46 OF 77

JOB NO. 15950.18

C:\Users\CrumpK.JRENGINEERING\DC\ACCDocs\JR Engineering\15950\12\Project Files\15950\18 Cabela Drive\Drawings\Sheet Drawings\15950\18 Cabela Drive Col.T\15950\18 Hydrodynamic Separator A Details.dwg, DT04, 9/8/2026 2:50:57 PM, crumpk

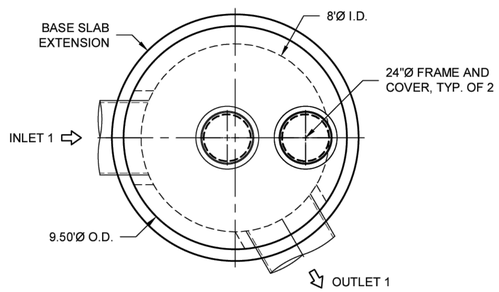

1 2 3 **PLAN VIEW**
INTERNALS NOT SHOWN

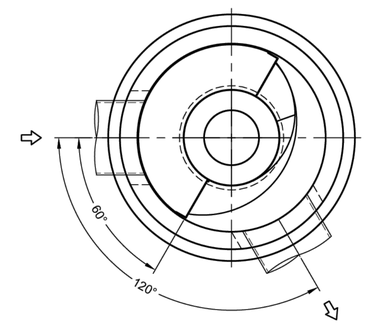

1 2 3 **PLAN VIEW FOR PIPE ORIENTATION**
TOP SLAB NOT SHOWN

INTERNAL COMPONENTS TO BE INSTALLED ON SITE BY CONTECH FIELD CONSULTANT. PLEASE CONTACT CONTECH FOR CURRENT INSTALLATION LEAD TIME

MATERIAL LIST (PROVIDED BY CONTECH)

COUNT	DESCRIPTION	INSTALLED BY
1	4030-8 CONCENTRIC FIBERGLASS INSERT	CONTRACTOR
1	4030, 2400 micron, 4.1' O.D. x 3.04' SCREEN, GREEN FLANGE UP	CONTRACTOR
1	HARDWARE KIT	CONTRACTOR
1	SEALANT FOR JOINTS	CONTRACTOR
2	24"Ø X 4" FRAME AND COVER, EJ #41600389, OR EQUIV.	CONTRACTOR

* SEE HYDRAULIC SHEAR PLATE DETAIL

SITE DESIGN DATA

WATER QUALITY FLOW RATE	2.95 CFS
PEAK FLOW RATE	19.09 CFS
RETURN PERIOD OF PEAK FLOW	100 YRS

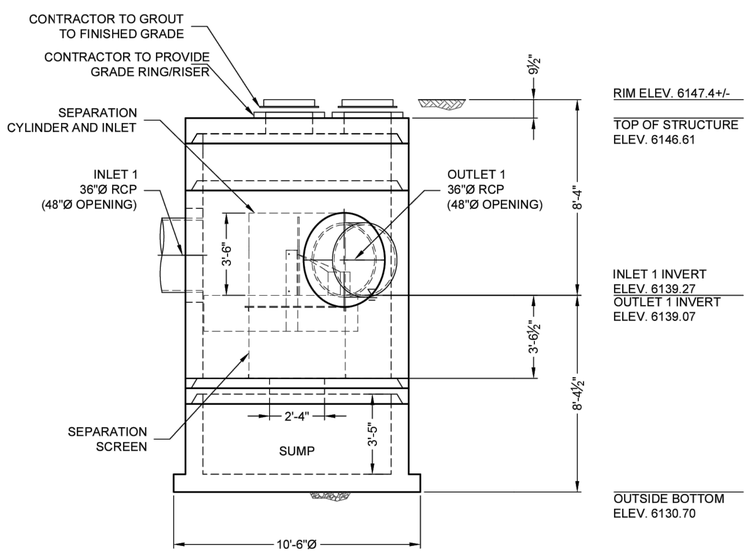

1 2 3 **ELEVATION VIEW**

GENERAL NOTES
1. CONTECH TO PROVIDE ALL MATERIALS UNLESS NOTED OTHERWISE.
2. FOR FABRICATION DRAWINGS WITH DETAILED STRUCTURE DIMENSIONS AND WEIGHT, PLEASE CONTACT YOUR CONTECH ENGINEERED SOLUTIONS LLC REPRESENTATIVE. www.ContechES.com
3. CDS WATER QUALITY STRUCTURE SHALL BE IN ACCORDANCE WITH ALL DESIGN DATA AND INFORMATION CONTAINED IN THIS DRAWING. CONTRACTOR TO CONFIRM STRUCTURE MEETS REQUIREMENTS OF PROJECT.
4. STRUCTURE SHALL MEET AASHTO HS-20 LOAD RATING, ASSUMING EARTH COVER OF 0' - 2', AND GROUNDWATER ELEVATION AT, OR BELOW, THE OUTLET PIPE INVERT ELEVATION. ENGINEER OF RECORD TO CONFIRM ACTUAL GROUNDWATER ELEVATION. CASTINGS SHALL MEET AASHTO M306 AND BE CAST WITH THE CONTECH LOGO.
5. IF REQUIRED, PVC HYDRAULIC SHEAR PLATE IS PLACED ON SHELF AT BOTTOM OF SCREEN CYLINDER. REMOVE AND REPLACE AS NECESSARY DURING MAINTENANCE CLEANING.
6. CDS STRUCTURE SHALL BE PRECAST CONCRETE CONFORMING TO ASTM C-478 AND AASHTO LOAD FACTOR DESIGN METHOD.

INSTALLATION NOTES
A. ANY SUB-BASE, BACKFILL DEPTH, AND/OR ANTI-FLOTATION PROVISIONS ARE SITE-SPECIFIC DESIGN CONSIDERATIONS AND SHALL BE SPECIFIED BY ENGINEER OF RECORD.
B. CONTRACTOR TO PROVIDE EQUIPMENT WITH SUFFICIENT LIFTING AND REACH CAPACITY TO LIFT AND SET THE CDS MANHOLE STRUCTURE.
C. CONTRACTOR TO INSTALL JOINT SEALANT BETWEEN ALL STRUCTURE SECTIONS AND ASSEMBLE STRUCTURE.
D. CONTRACTOR TO PROVIDE, INSTALL, AND GROUT INLET AND OUTLET PIPE(S). MATCH PIPE INVERTS WITH ELEVATIONS SHOWN. ALL PIPE CENTERLINES TO MATCH PIPE OPENING CENTERLINES.
E. CONTRACTOR TO TAKE APPROPRIATE MEASURES TO ASSURE UNIT IS WATER TIGHT, HOLDING WATER TO FLOWLINE INVERT MINIMUM. IT IS SUGGESTED THAT ALL JOINTS BELOW PIPE INVERTS ARE GROUTED.

STRUCTURE WEIGHT
APPROXIMATE HEAVIEST PICK = 29500 LBS.
STRUCTURE IS DELIVERED IN 4 PIECES

MAX FOOTPRINT = 10.50'Ø

CONTECH
CONTRACT
DRAWING

RNK-HNCO
LAYOUT 1H

The design and information shown on this drawing is provided as a service to the project owner, engineer and contractor by CONTECH Construction Products Inc. or its subsidiaries (CONTECH). Unless noted or marked on this drawing, nor any part thereof, may be used, reproduced or modified in any manner without the written consent of CONTECH. Failure to comply is done at the user's own risk and CONTECH expressly disclaims any liability or responsibility for such use.

If discrepancies between the supplied information upon which the drawing is based and actual field conditions are encountered as site work progresses, these must be immediately reported to the project engineer. Failure to do so may result in the need for design changes to be made by others to compensate for incomplete or inaccurate information supplied by others.

MARK	DATE	REVISION DESCRIPTION	BY
3	7/2/2026	UPDATED W.Q.F.R. & RIM ELEV.	EDM
2	3/31/2026	IN & OUT ELEV. & SITE DATA CHG.	EDM
1	2/25/2026	MODEL & LAYOUT CHANGED PER EOR	EDM

CDS4030-8-C - 885836-015
HILLCAMP TRAIL
LONE TREE, CO
SITE DESIGNATION: HDS-C1

CONTECH ENGINEERED SOLUTIONS LLC
www.ContechES.com
5070 Greenwood Plaza Blvd., Suite 330, Greenwood Village, CO 80111
720-587-2700 720-587-2505 FAX
CDS®
FOR PATENT INFORMATION, GO TO: www.ContechES.com/IP

DATE: 2/2/2026	
DESIGNED: STS	DRAWN: EDM
CHECKED: STS	APPROVED: STS
PROJECT No.: 885836	SEQUENCE No.: 015
SHEET: 1 OF 1	

UNTIL SUCH TIME AS THESE DRAWINGS ARE APPROVED BY THE APPROPRIATE REVIEWING AGENCIES, JR ENGINEERING APPROVES THEIR USE ONLY FOR THE PURPOSES DESIGNATED BY WRITTEN AUTHORIZATION.

PREPARED FOR
RAMPART RANGE METRO DISTRICT
8390 E CRESCENT PKWY
SUITE 300
GREENWOOD VILLAGE, CO 80111
PHONE: 303-779-5710

J·R ENGINEERING
A Westrian Company
Centennial 303-740-9393 • Colorado Springs 719-593-2593
Fort Collins 970-491-9888 • www.jrengineering.com

No.	REVISION	BY	DATE
1	1ST COLT SUBMITTAL	KJR	3/20/25
2	2ND COLT SUBMITTAL	KJR	8/15/25
3	3RD COLT SUBMITTAL	KJR	11/20/25

H-SCALE	N/A	DESIGNED BY	N/A
V-SCALE	N/A	DRAWN BY	GDC
DATE	3/27/26	CHECKED BY	

HILLCAMP TRAIL
HYDRODYNAMIC SEPARATOR C DETAILS

SHEET 47 OF 77
JOB NO. 15950.18

C:\USERS\ERIC.MOWELL\ONEDRIVE - THE QUIKRETE COMPANIES\DYNAMICS365 - CONTECH - PROJECTS\885836\PRODUCTS\885836-15-CDS\DRAWINGS\885836-15-CDS4030-8-C-CONFAB.DWG 7/2/2026 11:52 AM
C:\Users\CompK.JRENGINEERING\DC\ACCDocs\JR Engineering\15950\Project Files\15950\18 Cabela Drive\Drawings\Sheet Drawings\15950\18 Cabela Drive CoLT\15950\18 Hydrodynamic Separator C Details.dwg, DT01, 9/8/2026 2:49:09 PM, crumpk

V1600-3 V1610-3 Assembly

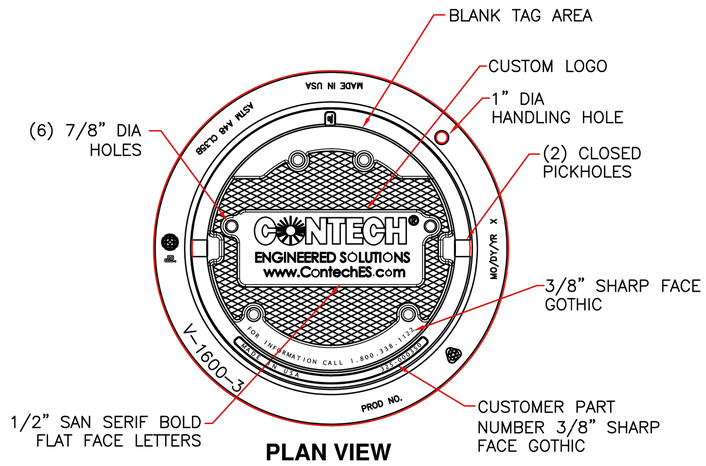

PLAN VIEW

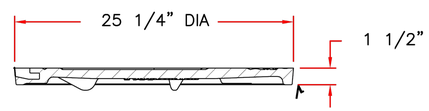

COVER SECTION

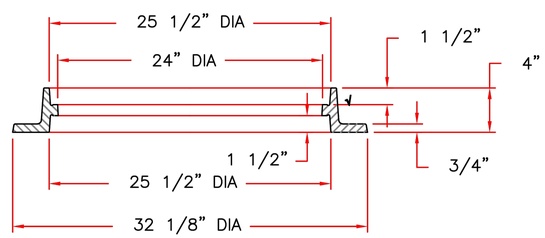

RING SECTION

Product Number

41600389

Design Features

-Materials
Frame
Gray Iron (CL35B)
Cover
Gray Iron (CL35B)

-Design Load
Heavy Duty
-Open Area
n/a
-Coating
Undipped
- √ Designates Machined Surface

Certification

-
- ASTM A48
-
-Country of Origin: USA

Major Components

41600310
41600374

Drawing Revision

05/02/2008 Designer: DEW
6/20/2017 Revised By: DAE

Disclaimer

Weights (lbs./kg) dimensions (inches/mm) and drawings provided for your guidance. We reserve the right to modify specifications without prior notice.

CONFIDENTIAL: This drawing is the property of EJ GROUP, Inc., and embodies confidential information, registered marks, patents, trade secret information, and/or know how that is the property of EJ GROUP, Inc. Copyright © 2012 EJ GROUP, Inc. All rights reserved.

Contact

800 626 4653
ejco.com

UNTIL SUCH TIME AS THESE DRAWINGS ARE APPROVED BY THE APPROPRIATE REVIEWING AGENCIES, JR ENGINEERING APPROVES THEIR USE ONLY FOR THE PURPOSES DESIGNATED BY WRITTEN AUTHORIZATION.

PREPARED FOR
RAMPART RANGE METRO DISTRICT
8390 E CRESCENT PKWY
SUITE 300
GREENWOOD VILLAGE, CO 80111
PHONE: 303-779-5710

J·R ENGINEERING
A Westrian Company
Centennial 303-740-9393 • Colorado Springs 719-593-2593
Fort Collins 970-491-9888 • www.jrengineering.com

No.	REVISION	BY	DATE
1	1ST COLT SUBMITTAL	KJR	3/20/25
2	2ND COLT SUBMITTAL	KJR	8/15/25
3	3RD COLT SUBMITTAL	KJR	11/20/25

H-SCALE	N/A
V-SCALE	N/A
DATE	3/27/26
DESIGNED BY	N/A
DRAWN BY	GDC
CHECKED BY	

HILLCAMP TRAIL

HYDRODYNAMIC SEPARATOR C DETAILS

SHEET 48 OF 77

JOB NO. 15950.18

C:\Users\CrumpK.JRENGINEERING\DC\ACCDocs\JR Engineering\15950\12\Project Files\15950\18 Cabela Drive\Drawings\Sheet Drawings\15950\18 Cabela Drive Col.T\15950\18 Hydrodynamic Separator C Details.dwg, DT02, 9/8/2026 2:46:09 PM, crumpk

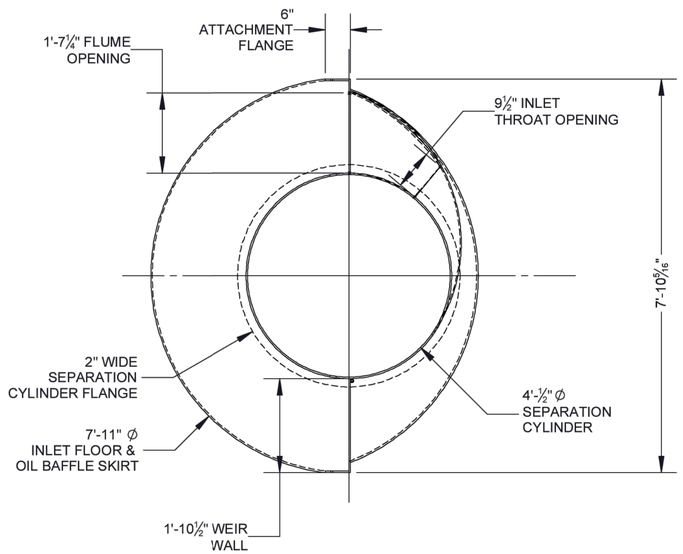

PLAN VIEW

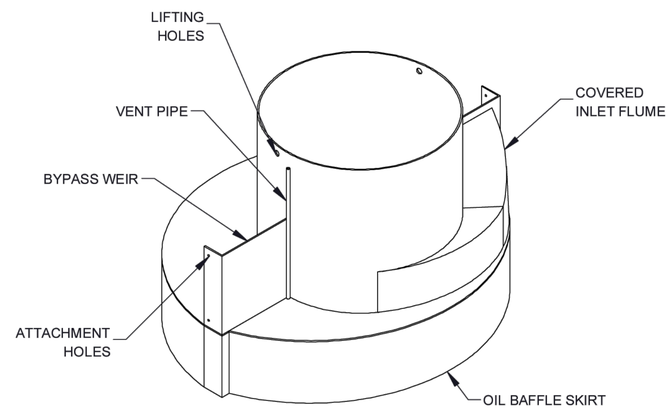

ASSEMBLY TOP VIEW

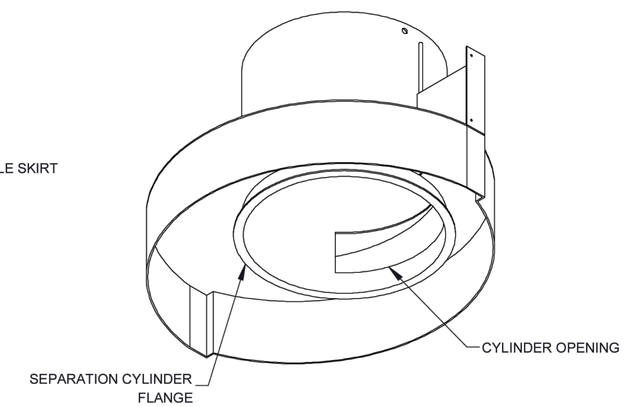

ASSEMBLY BOTTOM VIEW

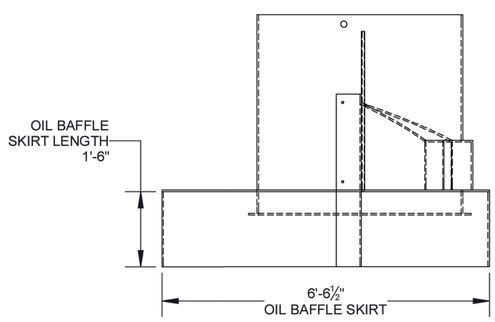

ELEVATION VIEW

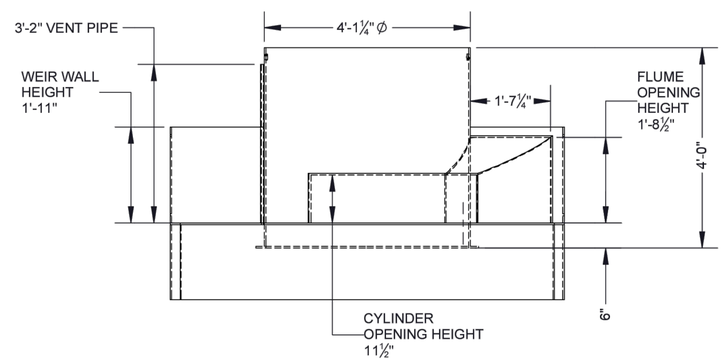

SIDE VIEW

NOTES:
1. SEE CDS UNIT ASSEMBLY AND INSTALLATION GUIDE FOR ADDITIONAL INFORMATION

The design and information shown on this drawing is provided as a service to the project owner, engineer and contractor by Contech Engineered Solutions LLC. or one of its affiliated companies ("Contech"). Neither this drawing, nor any part thereof, may be used, reproduced or modified in any manner without the prior written consent of Contech. Failure to comply is done at the user's own risk and Contech expressly disclaims any liability or responsibility for such use.

If discrepancies between the supplied information upon which the drawing is based and actual field conditions are encountered as site work progresses, these discrepancies must be reported to Contech immediately for re-evaluation of the design. Contech accepts no liability for designs based on missing, incomplete or inaccurate information supplied by others.

CDS®

THIS PRODUCT MAY BE PROTECTED BY ONE OR MORE OF THE FOLLOWING U.S. PATENTS: 5,788,849; 6,641,720; 6,911,006; 6,991,782; RELATED FOREIGN PATENTS, OR OTHER PATENTS PENDING.

CONTECH®
ENGINEERED SOLUTIONS LLC
www.ContechES.com
9025 Centre Pointe Dr., Suite 400, West Chester, OH 45069
800-338-1122 513-645-7000 513-645-7993 FAX

REFERENCE DETAIL
CDS 4030-8-C
CONCENTRIC INTERNALS

THIRD ANGLE PROJECTION

UNLESS OTHERWISE SPECIFIED
DIMENSIONS ARE IN INCHES
TOLERANCES:
FRACTIONAL ± 1/16
ANGLES ± 1 DEGREE
TWO PLACE DECIMAL ± 0.06
THREE PLACE DECIMAL ± 0.030

PART NUMBER:	325-000791
APPROVED BY:	M. BROOKS
DRAWN BY:	C. CALDON
APPROVED BY DATE:	2022.03.08
DRAWN BY DATE:	2022.02.15
REV:	B
SCALE:	N/A
	SHEET 1 OF 1

UNTIL SUCH TIME AS THESE DRAWINGS ARE APPROVED BY THE APPROPRIATE REVIEWING AGENCIES, JR ENGINEERING APPROVES THEIR USE ONLY FOR THE PURPOSES DESIGNATED BY WRITTEN AUTHORIZATION.

PREPARED FOR
RAMPART RANGE METRO DISTRICT
8390 E CRESCENT PKWY
SUITE 300
GREENWOOD VILLAGE, CO 80111
PHONE: 303-779-5710

J·R ENGINEERING
A Westrian Company
Centennial 303-740-9393 • Colorado Springs 719-593-2593
Fort Collins 970-491-9888 • www.jrengineering.com

No.	REVISION	BY	DATE
1	1ST COLT SUBMITTAL	KJR	3/20/25
2	2ND COLT SUBMITTAL	KJR	8/15/25
3	3RD COLT SUBMITTAL	KJR	11/20/25

H-SCALE	N/A
V-SCALE	N/A
DATE	3/27/26
DESIGNED BY	N/A
DRAWN BY	GDC
CHECKED BY	

HILLCAMP TRAIL

HYDRODYNAMIC SEPARATOR
C DETAILS

SHEET 49 OF 77

JOB NO. 15950.18

C:\Users\CrumpK.JRENGINEERING\DC\ACCDocs\JR Engineering\15950\12\Project Files\15950\18 Cabela Drive\Drawings\Sheet Drawings\15950\18 Cabela Drive CoLT\15950\18 Hydrodynamic Separator C Details.dwg, DT03, 9/8/2026 2:48:22 PM, crumpk

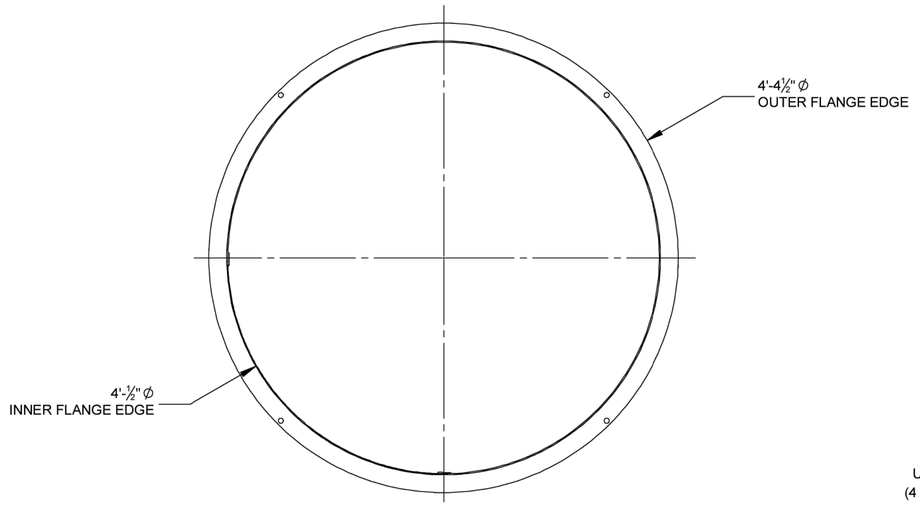

TOP VIEW

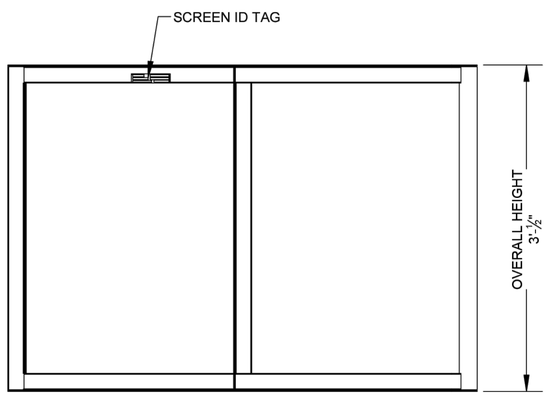

SIDE VIEW

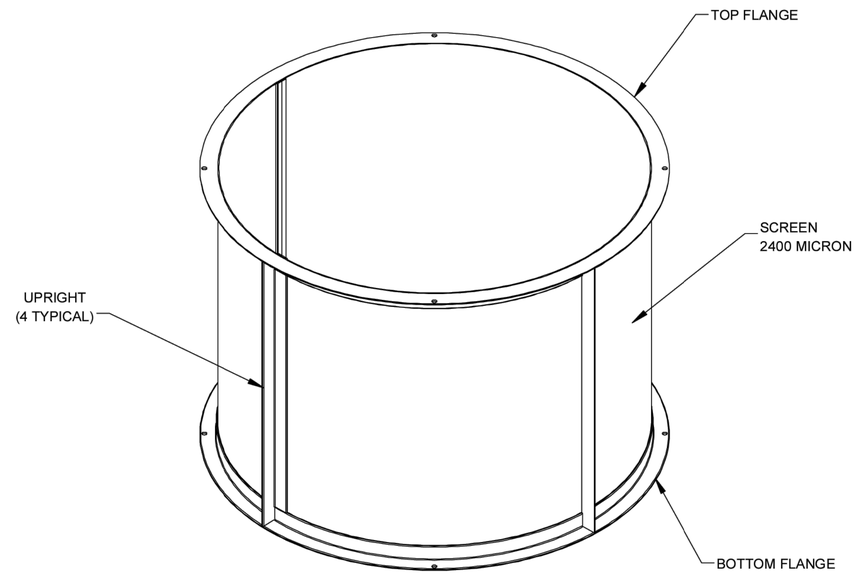

ISOMETRIC VIEW

NOTES:
1. SEE SITE SPECIFIC DRAWINGS FOR REQUIRED SCREEN ASSEMBLY
2. SEE CDS UNIT ASSEMBLY AND INSTALLATION GUIDE FOR ADDITIONAL INFORMATION

The design and information shown on this drawing is provided as a service to the project owner, engineer and contractor by Contech Engineered Solutions LLC, or one of its affiliated companies ("Contech"). Neither this drawing, nor any part thereof, may be used, reproduced or modified in any manner without the prior written consent of Contech. Failure to comply is done at the user's own risk and Contech expressly disclaims any liability or responsibility for such use.

If discrepancies between the supplied information upon which the drawing is based and actual field conditions are encountered as site work progresses, these discrepancies must be reported to Contech immediately for re-evaluation of the design. Contech accepts no liability for designs based on missing, incomplete or inaccurate information supplied by others.

CDS®

THIS PRODUCT MAY BE PROTECTED BY ONE OR MORE OF THE FOLLOWING U.S. PATENTS: 8,786,449; 8,641,720; 6,611,998; 6,691,792; RELATED FOREIGN PATENTS, OR OTHER PATENTS PENDING.

CONTECH® ENGINEERED SOLUTIONS LLC
www.ContechES.com
9025 Centre Pointe Dr., Suite 400, West Chester, OH 45069
800-338-1122 513-645-7000 513-645-7993 FAX

REFERENCE DETAIL
SCREEN ASSEMBLY
CDS4030 2400 MICRON

THIRD ANGLE PROJECTION

UNLESS OTHERWISE SPECIFIED DIMENSIONS ARE IN INCHES
TOLERANCES:
FRACTIONAL ± 1/16
ANGLES ± 1 DEGREE
TWO PLACE DECIMAL ± 0.06
THREE PLACE DECIMAL ± 0.030

PART NUMBER:	335-000385
APPROVED BY:	M. BROOKS
DRAWN BY:	C. CALDON
APPROVED BY DATE:	2021.12.13
DRAWN BY DATE:	2022.02.16
REV:	C
SCALE:	N/A
	SHEET 1 OF 1

UNTIL SUCH TIME AS THESE DRAWINGS ARE APPROVED BY THE APPROPRIATE REVIEWING AGENCIES, JR ENGINEERING APPROVES THEIR USE ONLY FOR THE PURPOSES DESIGNATED BY WRITTEN AUTHORIZATION.

PREPARED FOR
RAMPART RANGE METRO DISTRICT
8390 E CRESCENT PKWY
SUITE 300
GREENWOOD VILLAGE, CO 80111
PHONE: 303-779-5710

J·R ENGINEERING
A Westrian Company
Centennial 303-740-9393 • Colorado Springs 719-593-2593
Fort Collins 970-491-9888 • www.jrengineering.com

No.	REVISION	BY	DATE
1	1ST COLT SUBMITTAL	KJR	3/20/25
2	2ND COLT SUBMITTAL	KJR	8/15/25
3	3RD COLT SUBMITTAL	KJR	11/20/25

H-SCALE	N/A
V-SCALE	N/A
DATE	3/27/26
DESIGNED BY	N/A
DRAWN BY	GDC
CHECKED BY	

HILLCAMP TRAIL

HYDRODYNAMIC SEPARATOR
C DETAILS

SHEET 50 OF 77

JOB NO. 15950.18

C:\Users\Crumpk_JRENGINEERING\DC\ACCDocs\JR Engineering\15950012\Project Files\15950018 Cabela Drive\Drawings\Sheet Drawings\15950018 Cabela Drive CoLT\15950018 Hydrodynamic Separator C Details.dwg, DT04, 9/8/2026 2:48:14 PM, crumpk

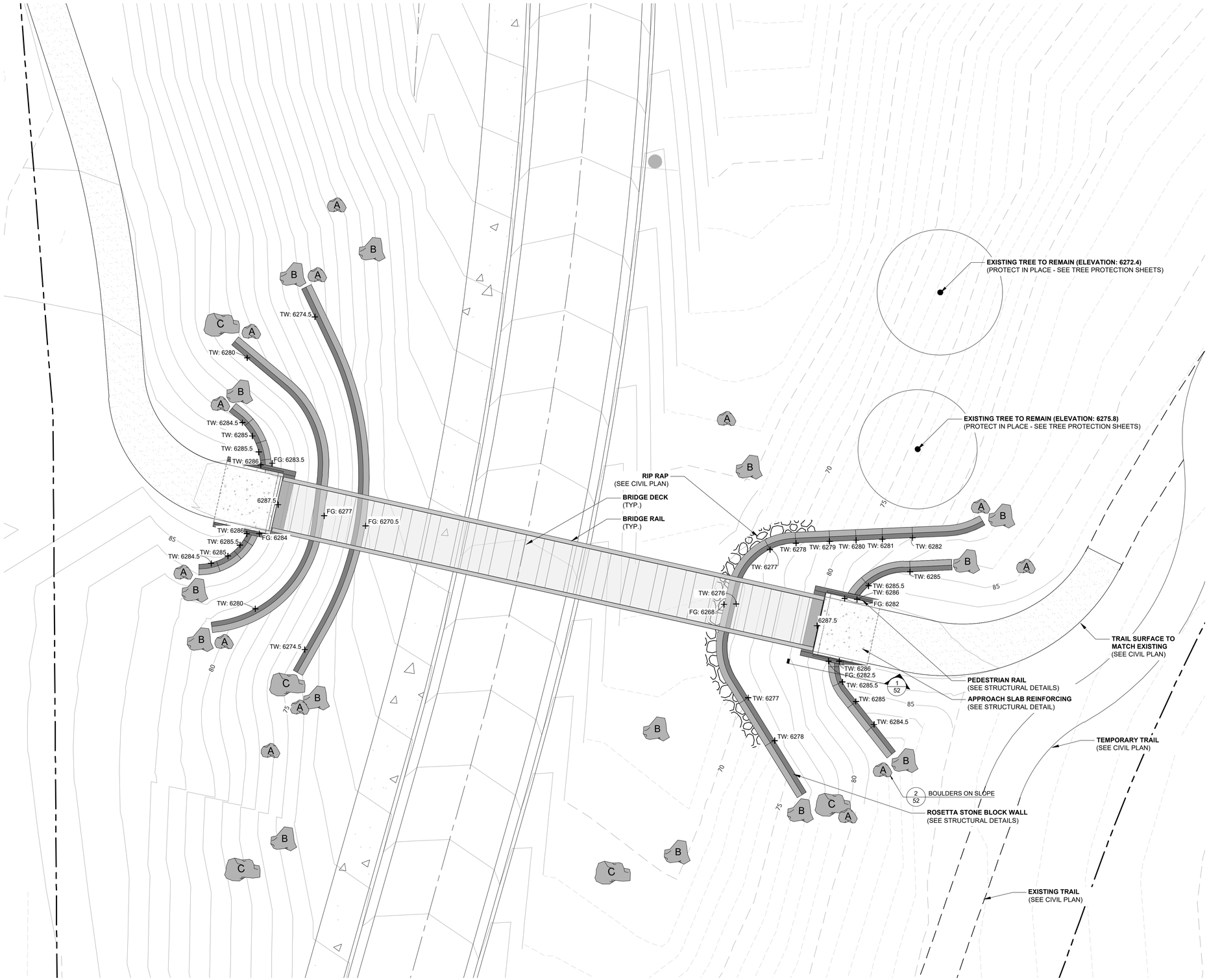

LEGEND

— — — —	PROPERTY BOUNDRY
A B C	BOULDERS (SEE DETAIL 2/52)

NOTE:
THE PEDESTRIAN BRIDGE AND ALL ASSOCIATED RETAINING WALLS, VERTICAL STRUCTURES, AND RELATED IMPROVEMENTS ADJACENT TO THE BRIDGE ARE EXCLUDED FROM THIS CONTRACT AND WILL BE DESIGNED AND CONSTRUCTED BY THE DESIGN-BUILD CONTRACTOR.

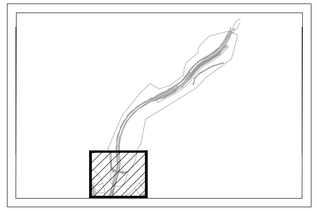

KEYMAP

0' 10' 20' 30'
1 = 10'

NORTH

dtj DESIGN

ARCHITECTURE
PLANNING
LANDSCAPE ARCHITECTURE

DTJ DESIGN, Inc.
3101 Iris Avenue, Suite 130
Boulder, Colorado 80301
T 303.443.7533

www.dtjdesign.com

HILLCAMP RIDGEGATE DRIVE

LANDSCAPE PLANS

LONE TREE, COLORADO

DAVID AUSTIN IGNATEW
563
06/25/09
Original Date of Licensure
STATE OF COLORADO
LICENSED LANDSCAPE ARCHITECT

DRAWN BY:	DTJ
CHECKED BY:	DTJ
PROJECT NO.:	2022092.10
ISSUE DATE:	09/04/2026
REVISIONS:	

SHEET TITLE:

LAYOUT PLAN

SHEET NUMBER:

51

Drawing: U:\2022092.10 Brookfield Mesa Top\05 CAD\Sheets\03_PEDESTRIAN BRIDGE LANDSCAPE PLAN\L100 LAYOUT.dwg
Last Saved: July 17, 2026 1:56:48 PM by ASchlotfeldt
Last Plotted 7/17/2026 1:58:33 PM

COPYRIGHT © ALL RIGHTS RESERVED DTJ DESIGN, INC. 2019

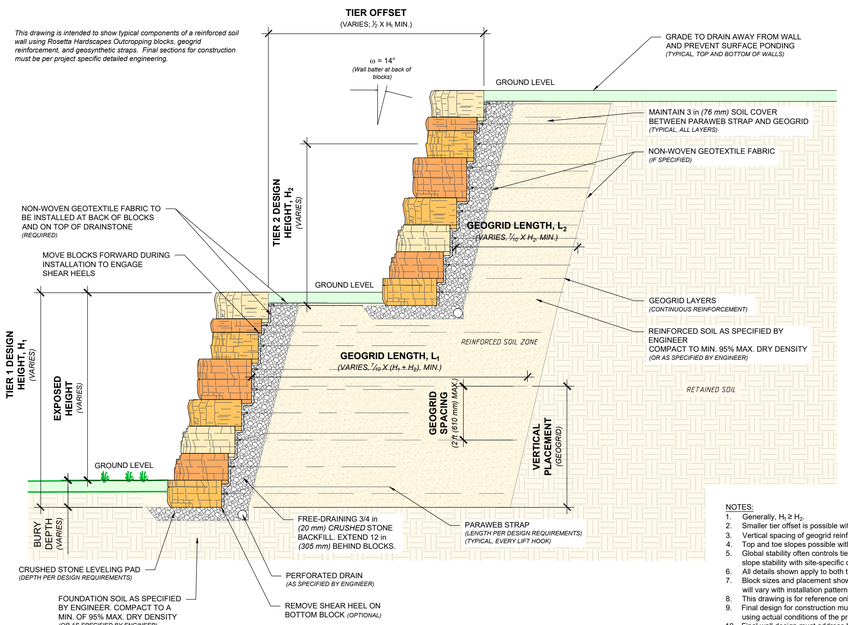

NOTES:
1. Generally, $H_1 \geq H_2$.
2. Smaller tier offset is possible with site-specific engineering.
3. Vertical spacing of geogrid reinforcing generally ≤ 2 feet (610 mm).
4. Top and toe slopes possible with site-specific engineering.
5. Global stability often controls tiered wall design. Geotechnical engineer should analyze slope stability with site-specific conditions.
6. All details shown apply to both tiers.
7. Block sizes and placement shown are for reference only. Individual outcropping blocks will vary with installation pattern.
8. This drawing is for reference only, not for construction.
9. Final design for construction must be prepared by a registered professional engineer using actual conditions of the proposed site.
10. Final wall design must address both internal and external drainage and shall be evaluated by the professional engineer who is responsible for the wall design.
11. Blocks to be in color "Bailey" to match existing walls along Cabela Drive

4/52 TIERED WALL
N.T.S — SECTION

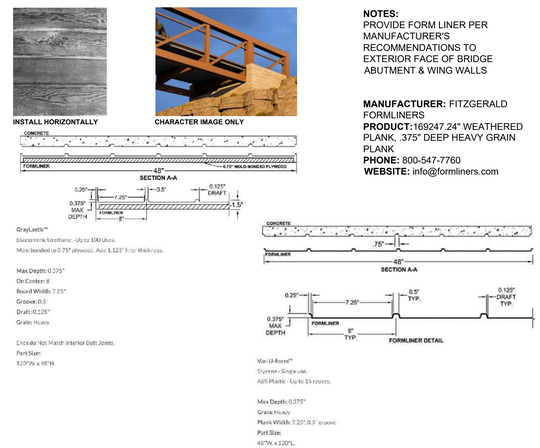

NOTES:
PROVIDE FORM LINER PER MANUFACTURER'S RECOMMENDATIONS TO EXTERIOR FACE OF BRIDGE ABUTMENT & WING WALLS

MANUFACTURER: FITZGERALD FORMLINERS
PRODUCT: 169247.24" WEATHERED PLANK, .375" DEEP HEAVY GRAIN PLANK
PHONE: 800-547-7760
WEBSITE: info@formliners.com

3/52 BOARD FORM CONCRETE (FORM LINER)
1/2" = 1'-0"

NOTES:
1. BOULDER MATERIAL TO BE HARVESTED ON SITE SELECTION, LOCATION, AND ARRANGEMENT OF BOULDERS SHALL BE STAKED IN FIELD BY LANDSCAPE ARCHITECT AND APPROVED BY OWNER'S REPRESENTATIVE PRIOR TO PLACEMENT.
2. A PORTION OF THE BOULDER CLUSTER(S) SHALL BE CONSTRUCTED AS A MOCK-UP SECTION. THE MOCK UP SHALL BE REVIEWED BY AND ADJUSTED PER THE OWNER'S REPRESENTATIVE. THE MOCK UP SHALL PROVIDE A VISUAL REPRESENTATION AND ACT AS A GUIDE FOR CONSTRUCTING ALL BOULDER CLUSTERS. A BOULDER CLUSTER SHALL INCLUDE AN EQUAL MIXTURE OF BOULDERS IN HEIGHTS OF 24", 36", 48" AND 60" ABOVE FINISHED GRADE GROUPED TOGETHER CREATING A MASSING (TOUCHING).
4. BOULDER ORIENTATION AND POSITION TO BE APPROVED BY OWNERS REP. PRIOR TO FINAL APPROVAL AND ADJACENT IMPROVEMENTS. IT IS THE CONTRACTOR'S RESPONSIBILITY TO OBTAIN FINAL GRADE ORIENTATION TO ADJACENT IMPROVEMENTS.

BOULDER SIZING-SCHEDULE		
TYPE	CLASSIFICATION	DIMENSION
A	SMALL	24-36" WIDTH / DEPTH / HEIGHT
B	MEDIUM	36-48" WIDTH / DEPTH / HEIGHT
C	LARGE	48-60" WIDTH / DEPTH / HEIGHT

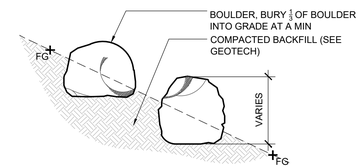

2/52 BOULDER ON SLOPE
1/2" = 1'-0" — SECTION

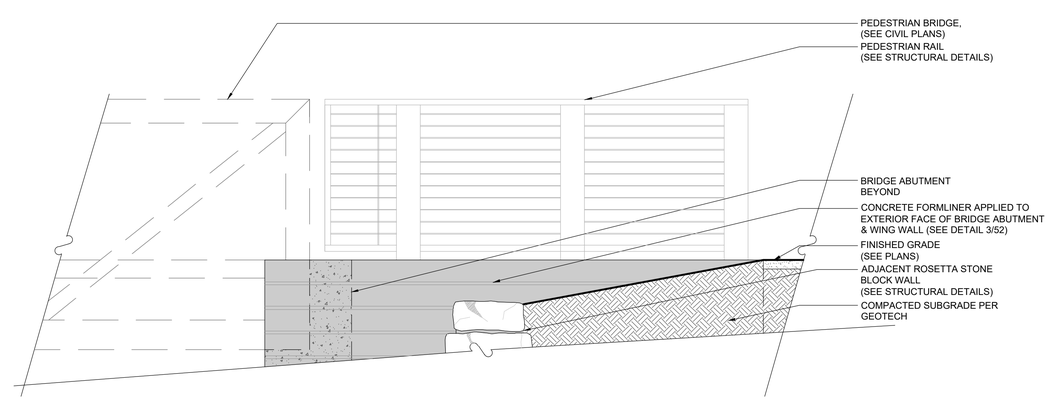

1/52 WING WALL
1/2" = 1'-0" — ELEVATION/SECTION

dtj DESIGN
ARCHITECTURE
PLANNING
LANDSCAPE ARCHITECTURE

DTJ DESIGN, Inc.
3101 Iris Avenue, Suite 130
Boulder, Colorado 80301
T 303.443.7533

www.dtjdesign.com

HILLCAMP RIDGEGATE DRIVE
LANDSCAPE PLANS

LONE TREE, COLORADO

DAVID AUSTIN IGNATEW
563
06/25/05
Original Date of Licensure
STATE OF COLORADO
LICENSED LANDSCAPE ARCHITECT

DRAWN BY:	DTJ
CHECKED BY:	DTJ
PROJECT NO.:	2022092.10
ISSUE DATE:	09/04/2026
REVISIONS:	

SHEET TITLE:
SITE DETAILS

SHEET NUMBER:
52

Drawing: U:\2022092.10-Brookfield Mesa Top\05 CAD\Sheets\03_PEDESTRIAN BRIDGE LANDSCAPE PLAN\L200 - L2XX SITE DETAILS.dwg
Last Saved: March 26, 2026 1:09:31 PM by aSchlotfeldt
Last Plotted 7/17/2026 1:58:10 PM
COPYRIGHT © ALL RIGHTS RESERVED DTJ DESIGN, INC. 2019

MATCHLINE (SEE SHEET 54)

EXISTING TRAIL
(SEE CIVIL PLAN)

EXISTING TREES TO REMAIN
(PROTECT IN PLACE)

TEMPORARY TRAIL
(SEE CIVIL PLAN)
AFTER TEMPORARY PATH HAS BEEN REMOVED DISTURBED AREA NEEDS TO BE RESEEDED WITH REVEGETATION SEED MIX.

LEGEND

— — — —	PROPERTY BOUNDRY
	MATCHLINE (SEE KEYMAP)
A B C	BOULDERS (SEE DETAIL 2/52)

SEED MIXES

	REVEGETATION SEED MIX

NOTES:
1. FOR SEED MIX SPECIFICATIONS PLEASE SEE SHEET 58.
2. PLANTS TO BE INSTALLED IN THE FALL/SPRING DUE TO COOLER TEMPERATURES AND SEASONAL WATER. PLANTS TO BE HAND WATERED ON AN AS NEEDED BASIS. SEE PLANTING NOTES ON SHEET 58.

SYMBOL	CODE	BOTANICAL / COMMON NAME
DECIDUOUS TREES		
	QM	QUERCUS MACROCARPA BUR OAK
EVERGREEN TREES		
	PP	PINUS PONDEROSA PONDEROSA PINE
SHRUBS		
	AL	AMORPHA CANESCENS LEADPLANT
	AC	ATRIPLEX CANESCENS FOURWING SALTBUSH
	CM	CERCOCARPUS MONTANUS COMMON MOUNTAIN MAHOGANY
	ER	ERICAMERIA NAUSEOSUS RUBBER RABBITBRUSH
	RG	RHUS GLABRA SMOOTH SUMAC
	YB	YUCCA BACCATA BANANA YUCCA
	MA	MAHONIA AQUIFOLIUM OREGON GRAPE HOLLY

KEYMAP

0' 30' 60' 90'
1 = 30'

NORTH

dtj DESIGN

ARCHITECTURE
PLANNING
LANDSCAPE ARCHITECTURE

DTJ DESIGN, Inc.
3101 Iris Avenue, Suite 130
Boulder, Colorado 80301
T 303.443.7533

www.dtjdesign.com

HILLCAMP RIDGEGATE DRIVE
LANDSCAPE PLANS

LONE TREE, COLORADO

DAVID AUSTIN IGNATEW
563
06/25/08
Original Date of Licensure
STATE OF COLORADO
LICENSED LANDSCAPE ARCHITECT

DRAWN BY:	DTJ
CHECKED BY:	DTJ
PROJECT NO.:	2022092.10
ISSUE DATE:	09/04/2026
REVISIONS:	

SHEET TITLE:

SEEDING PLAN

SHEET NUMBER:

53

Drawing: U:\2022092.10 Brookfield Mesa Top\05 CAD\Sheets\03_PEDESTRIAN BRIDGE LANDSCAPE PLAN\L300 - L3XX PLANTING PLANS.dwg
Last Saved: July 2, 2026 2:59:15 PM by ASchlotfeldt
Last Plotted 7/17/2026 1:58:55 PM
COPYRIGHT © ALL RIGHTS RESERVED DTJ DESIGN, INC. 2019

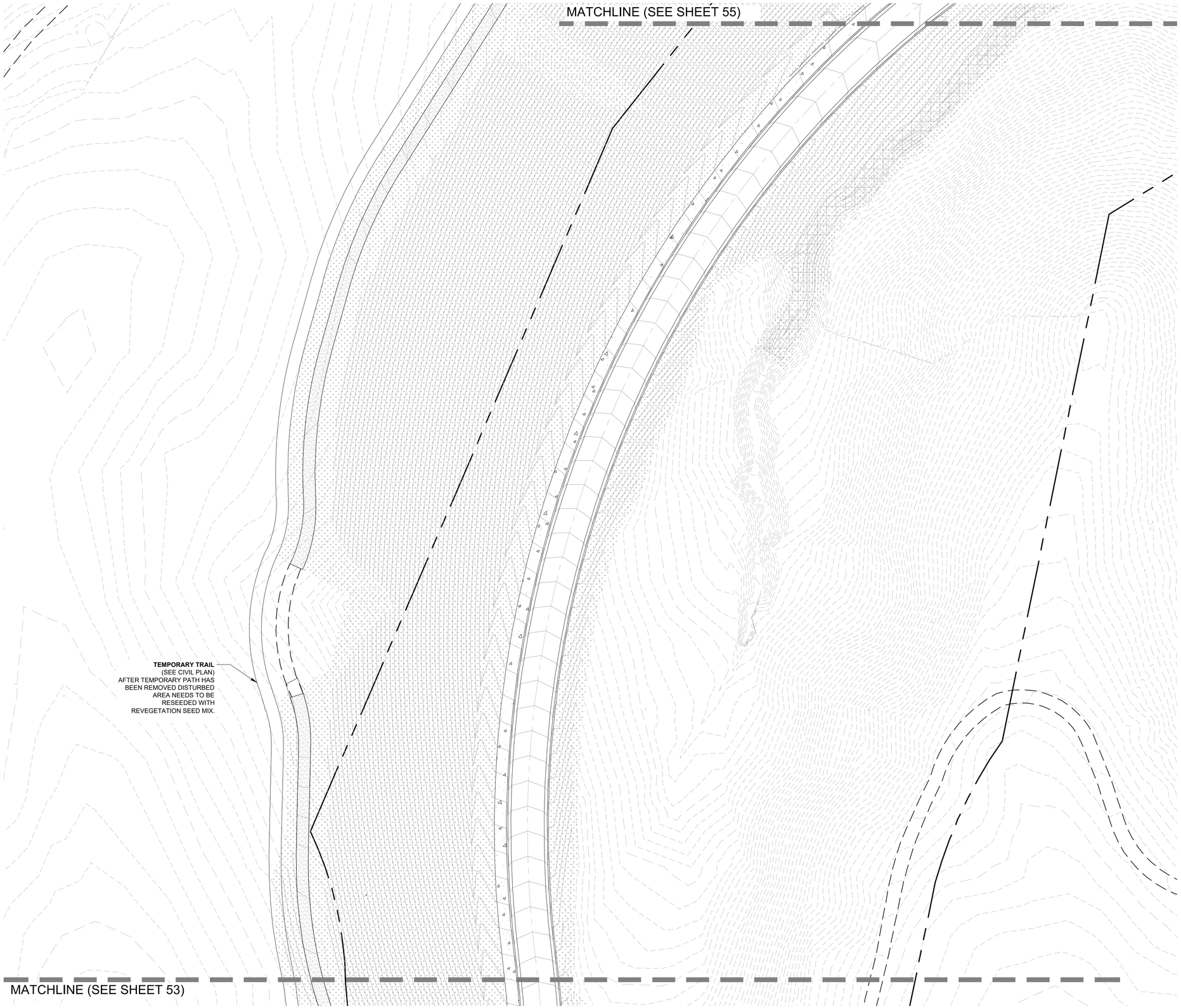

LEGEND

— — — —	PROPERTY BOUNDRY
▬ ▬	MATCHLINE (SEE KEYMAP)
A B C	BOULDERS (SEE DETAIL 2/52)

SEED MIXES

	REVEGETATION SEED MIX

NOTES:
1. FOR SEED MIX SPECIFICATIONS PLEASE SEE SHEET 58.
2. PLANTS TO BE INSTALLED IN THE FALL/SPRING DUE TO COOLER TEMPERATURES AND SEASONAL WATER. PLANTS TO BE HAND WATERED ON AN AS NEEDED BASIS. SEE PLANTING NOTES ON SHEET 58.

SYMBOL	CODE	BOTANICAL / COMMON NAME
DECIDUOUS TREES		
	QM	QUERCUS MACROCARPA BUR OAK
EVERGREEN TREES		
	PP	PINUS PONDEROSA PONDEROSA PINE
SHRUBS		
	AL	AMORPHA CANESCENS LEADPLANT
	AC	ATRIPLEX CANESCENS FOURWING SALTBUSH
	CM	CERCOCARPUS MONTANUS COMMON MOUNTAIN MAHOGANY
	ER	ERICAMERIA NAUSEOSUS RUBBER RABBITBRUSH
	RG	RHUS GLABRA SMOOTH SUMAC
	YB	YUCCA BACCATA BANANA YUCCA
	MA	MAHONIA AQUIFOLIUM OREGON GRAPE HOLLY

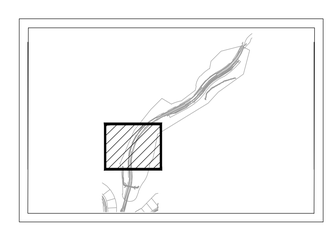

KEYMAP

0' 30' 60' 90'
1 = 30'

NORTH

dtj DESIGN

ARCHITECTURE
PLANNING
LANDSCAPE ARCHITECTURE

DTJ DESIGN, Inc.
3101 Iris Avenue, Suite 130
Boulder, Colorado 80301
T 303.443.7533

www.dtjdesign.com

HILLCAMP RIDGEGATE DRIVE
LANDSCAPE PLANS

LONE TREE, COLORADO

DAVID AUSTIN IGNATEW
563
06/25/19
Original Date of Licensure
STATE OF COLORADO
LICENSED LANDSCAPE ARCHITECT

DRAWN BY:	DTJ
CHECKED BY:	DTJ
PROJECT NO.:	2022092.10
ISSUE DATE:	09/04/2026
REVISIONS:	

SHEET TITLE:

SEEDING PLAN

SHEET NUMBER:

54

Drawing: U:\2022092.10 Brookfield Mesa Top\05 CAD\Sheets\03_PEDESTRIAN BRIDGE LANDSCAPE PLAN\L300 - L3XX PLANTING PLANS.dwg
Last Saved: July 2, 2026 2:59:15 PM by ASchloffeldt
Last Plotted 7/2/2026 3:30:27 PM
COPYRIGHT © ALL RIGHTS RESERVED DTJ DESIGN, INC. 2019

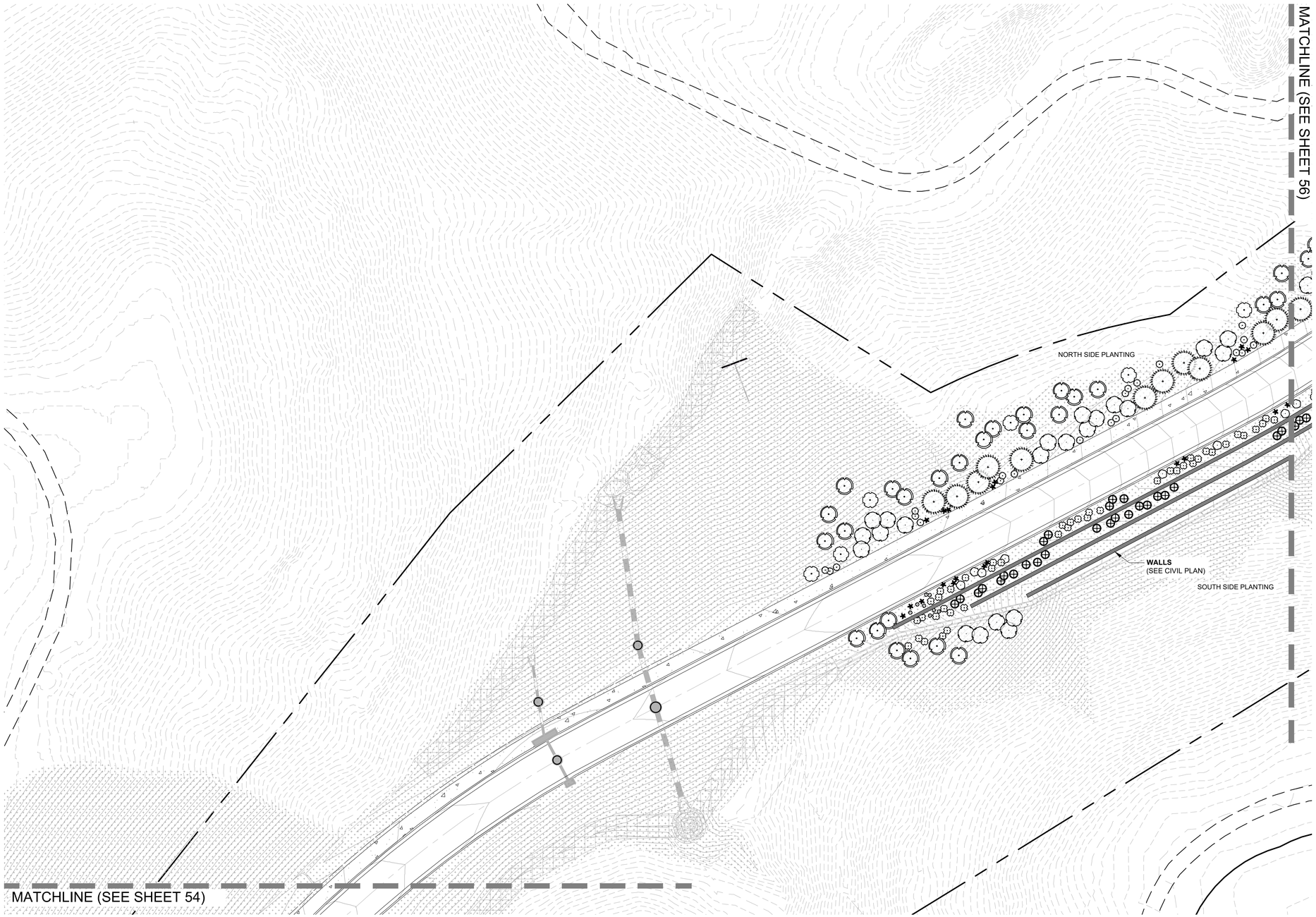

LEGEND

— — — —	PROPERTY BOUNDRY
▬ ▬	MATCHLINE (SEE KEYMAP)
A B C	BOULDERS (SEE DETAIL 2/52)

SEED MIXES

	REVEGETATION SEED MIX

NOTES:
1. FOR SEED MIX SPECIFICATIONS PLEASE SEE SHEET 58.
2. PLANTS TO BE INSTALLED IN THE FALL/SPRING DUE TO COOLER TEMPERATURES AND SEASONAL WATER. PLANTS TO BE HAND WATERED ON AN AS NEEDED BASIS. SEE PLANTING NOTES ON SHEET 58.

SYMBOL	CODE	BOTANICAL / COMMON NAME
DECIDUOUS TREES		
	QM	QUERCUS MACROCARPA BUR OAK
EVERGREEN TREES		
	PP	PINUS PONDEROSA PONDEROSA PINE
SHRUBS		
	AL	AMORPHA CANESCENS LEADPLANT
	AC	ATRIPLEX CANESCENS FOURWING SALTBUSH
	CM	CERCOCARPUS MONTANUS COMMON MOUNTAIN MAHOGANY
	ER	ERICAMERIA NAUSEOSUS RUBBER RABBITBRUSH
	RG	RHUS GLABRA SMOOTH SUMAC
	YB	YUCCA BACCATA BANANA YUCCA
	MA	MAHONIA AQUIFOLIUM OREGON GRAPE HOLLY

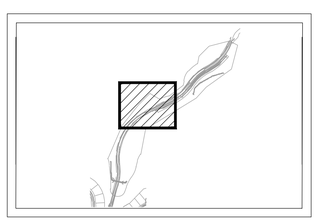

KEYMAP

0' 30' 60' 90'
1 = 30'

NORTH

dtj DESIGN

ARCHITECTURE
PLANNING
LANDSCAPE ARCHITECTURE

DTJ DESIGN, Inc.
3101 Iris Avenue, Suite 130
Boulder, Colorado 80301
T 303.443.7533

www.dtjdesign.com

HILLCAMP RIDGEGATE DRIVE
LANDSCAPE PLANS

LONE TREE, COLORADO

DAVID AUSTIN IGNATEW
563
06/25/08
Original Date of Licensure
STATE OF COLORADO
LICENSED LANDSCAPE ARCHITECT

DRAWN BY:	DTJ
CHECKED BY:	DTJ
PROJECT NO.:	2022092.10
ISSUE DATE:	09/04/2026
REVISIONS:	

SHEET TITLE:

PLANTING PLAN

SHEET NUMBER:

55

Drawing: U:\2022092.10 Brookfield Mesa Top\05 CAD\Sheets\03_PEDESTRIAN BRIDGE LANDSCAPE PLAN\L300 - L3XX PLANTING PLANS.dwg
Last Saved: July 2, 2026 2:46:49 PM by ASchlotfeldt
Last Plotted 7/2/2026 2:52:23 PM
COPYRIGHT © ALL RIGHTS RESERVED DTJ DESIGN, INC. 2019

LEGEND

— — — —	PROPERTY BOUNDRY
▬ ▬	MATCHLINE (SEE KEYMAP)
A B C	BOULDERS (SEE DETAIL 2/52)

SEED MIXES

	REVEGETATION SEED MIX

NOTES:
1. FOR SEED MIX SPECIFICATIONS PLEASE SEE SHEET 58.
2. PLANTS TO BE INSTALLED IN THE FALL/SPRING DUE TO COOLER TEMPERATURES AND SEASONAL WATER. PLANTS TO BE HAND WATERED ON AN AS NEEDED BASIS. SEE PLANTING NOTES ON SHEET 58.

SYMBOL	CODE	BOTANICAL / COMMON NAME
DECIDUOUS TREES		
	QM	QUERCUS MACROCARPA BUR OAK
EVERGREEN TREES		
	PP	PINUS PONDEROSA PONDEROSA PINE
SHRUBS		
	AL	AMORPHA CANESCENS LEADPLANT
	AC	ATRIPLEX CANESCENS FOURWING SALTBUSH
	CM	CERCOCARPUS MONTANUS COMMON MOUNTAIN MAHOGANY
	ER	ERICAMERIA NAUSEOSUS RUBBER RABBITBRUSH
	RG	RHUS GLABRA SMOOTH SUMAC
	YB	YUCCA BACCATA BANANA YUCCA
	MA	MAHONIA AQUIFOLIUM OREGON GRAPE HOLLY

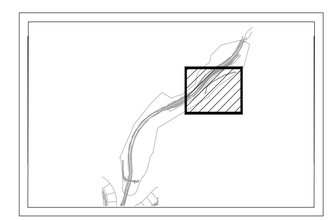

KEYMAP

0' 30' 60' 90'
1 = 30'

NORTH

dtj DESIGN

ARCHITECTURE
PLANNING
LANDSCAPE ARCHITECTURE

DTJ DESIGN, Inc.
3101 Iris Avenue, Suite 130
Boulder, Colorado 80301
T 303.443.7533

www.dtjdesign.com

HILLCAMP RIDGEGATE DRIVE
LANDSCAPE PLANS

LONE TREE, COLORADO

DAVID AUSTIN IGNATEW
563
06/25/08
Original Date of Licensure
STATE OF COLORADO
LICENSED LANDSCAPE ARCHITECT

DRAWN BY:	DTJ
CHECKED BY:	DTJ
PROJECT NO.:	2022092.10
ISSUE DATE:	09/04/2026
REVISIONS:	

SHEET TITLE:

PLANTING PLAN

SHEET NUMBER:

56

Drawing: U:\2022092.10 Brookfield Mesa Top\05 CAD\Sheets\03_PEDESTRIAN BRIDGE LANDSCAPE PLAN\L300 - L3XX PLANTING PLANS.dwg
Last Saved: July 2, 2026 2:59:15 PM by ASchlotfeldt
Last Plotted 9/8/2026 11:56:44 AM
COPYRIGHT © ALL RIGHTS RESERVED DTJ DESIGN, INC. 2019

LEGEND

— — — —	PROPERTY BOUNDRY
▬ ▬	MATCHLINE (SEE KEYMAP)
A B C	BOULDERS (SEE DETAIL 2/52)

SEED MIXES

	REVEGETATION SEED MIX

NOTES:
1. FOR SEED MIX SPECIFICATIONS PLEASE SEE SHEET 58.
2. PLANTS TO BE INSTALLED IN THE FALL/SPRING DUE TO COOLER TEMPERATURES AND SEASONAL WATER. PLANTS TO BE HAND WATERED ON AN AS NEEDED BASIS. SEE PLANTING NOTES ON SHEET 58.

SYMBOL	CODE	BOTANICAL / COMMON NAME
DECIDUOUS TREES		
	QM	QUERCUS MACROCARPA BUR OAK
EVERGREEN TREES		
	PP	PINUS PONDEROSA PONDEROSA PINE
SHRUBS		
	AL	AMORPHA CANESCENS LEADPLANT
	AC	ATRIPLEX CANESCENS FOURWING SALTBUSH
	CM	CERCOCARPUS MONTANUS COMMON MOUNTAIN MAHOGANY
	ER	ERICAMERIA NAUSEOSUS RUBBER RABBITBRUSH
	RG	RHUS GLABRA SMOOTH SUMAC
	YB	YUCCA BACCATA BANANA YUCCA
	MA	MAHONIA AQUIFOLIUM OREGON GRAPE HOLLY

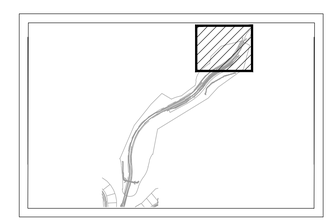

KEYMAP

0' 30' 60' 90'
1 = 30'

NORTH

dtj DESIGN

ARCHITECTURE
PLANNING
LANDSCAPE ARCHITECTURE

DTJ DESIGN, Inc.
3101 Iris Avenue, Suite 130
Boulder, Colorado 80301
T 303.443.7533

www.dtjdesign.com

HILLCAMP RIDGEGATE DRIVE
LANDSCAPE PLANS

LONE TREE, COLORADO

DAVID AUSTIN IGNATEW
563
06/25/09
Original Date of Licensure
STATE OF COLORADO
LICENSED LANDSCAPE ARCHITECT

DRAWN BY:	DTJ
CHECKED BY:	DTJ
PROJECT NO.:	2022092.10
ISSUE DATE:	09/04/2026
REVISIONS:	

SHEET TITLE:

SEEDING PLAN

SHEET NUMBER:

57

Drawing: U:\2022092.10 Brookfield Mesa Top\05 CAD\Sheets\03_PEDESTRIAN BRIDGE LANDSCAPE PLAN\L300 - L3XX PLANTING PLANS.dwg
Last Saved: July 2, 2026 2:59:15 PM by ASchlotfeldt
Last Plotted 9/8/2026 11:59:11 AM
COPYRIGHT © ALL RIGHTS RESERVED DTJ DESIGN, INC. 2019

LANDSCAPE PLANTING NOTES

1. The Contractor shall be responsible for becoming aware of all related existing conditions, utilities, pipes and structures, etc. prior to construction. The Contractor shall be held responsible for contacting all utility companies for field location of all underground utility lines, including depths, prior to any excavation. The Contractor shall take sole responsibility for any and all cost, or other liabilities incurred due to damage of said utilities/structures/etc.

2. The Contractor shall not willfully proceed with construction as designed when it is apparent that unknown obstructions and/or grade differences exist that may not have been known during design. Such conditions shall be immediately brought to the attention of the Owner's Representative for clarification. The Contractor shall assume full responsibility for all liabilities, including necessary revisions due to failure to give such notification.

3. The Contractor shall be responsible for any coordination with Subcontractors as required to accomplish all planting and related operations.

4. See specifications and details for planting methods (staking, pit dimensions, backfill requirements, etc.), soil testing, materials, execution and plant protection and other related planting requirements.

5. The acceptable tolerances for this project are minimal and specific layout is required as shown on the layout, planting, and other plans. Final location and staking of all plant materials shall be accepted by the Owner's Representative in advance of plantings. A registered surveyor may be required if specified elsewhere.

6. The Contractor shall notify Owner's Representative 48 hours prior to commencement of work to coordinate project inspection schedules.

7. If conflicts arise between size of areas and plans, The Contractor is required to contact Owner's Representative for resolution. Failure to make such conflicts known to the Owner's Representative will result in The Contractor's liability to relocate the materials.

8. Plant names may be abbreviated on the drawings. See plant legend for symbols, abbreviations, botanical/common names, sizes, estimated quantities (if given) and other remarks.

9. It is The Contractor's responsibility to furnish all plant materials free of pests or plant diseases. Pre-selected or "tagged" material must be inspected by The Contractor and certified pest and disease free. It is The Contractor's obligation to maintain and warranty all plant materials per the "Project Manual" and planting specifications. All plants shall be subject to the Owner's Representative approval prior to installation.

10. The Contractor may be asked to provide "Unit Cost" for every size of plant material, by type, as called out on the planting plans, specifications and details. Unit cost shall include the plant material it self including installation, all labor, amendments, fertilizers, warranties, etc. as shown on the drawings, details and as specified. See "Project Manual", if applicable.

11. Provide matching sizes and forms for all species of trees and plants installed on grid or spaced equally in rows as shown on drawings, unless otherwise shown or detailed. Adjust spacing (to "equal-equal") as necessary (subject to acceptance by the Owner's Representative).

12. Where provided, area takeoffs and plant quantity estimates are for information only. The Contractor is responsible to do their own quantity take-offs for all plant materials and sizes as shown on plans. In case of an discrepancies, plans and plant symbols shall take precedence over call-outs and/or "plant list". The Contractor is responsible for notifying the Owner's Representative with any major discrepancies for review and direction.

13. Coordinate installation of all plant material with installation of all adjacent irrigation, pavements, curb and related structures. Any damage to existing improvements is the responsibility of The Contractor and shall be replaced / repaired at his own expense.

14. Unless otherwise indicated:
    a. All groundcovers, perennials, orn. grasses and annuals shall be triangularly spaced (equal-equal). See Planting details.

20. The Contractor shall take into consideration all necessary scheduling and other precautions to avoid winter, climatic, or other weather related damage to plants. A "planting window" of specific calendar days is required to be submitted by The Contractor for approval and planting operations should occur per this approved schedule. See specification for more information.

21. All "existing plant material to remain" shall be staked and fenced for protection in a diameter equal to the drip line. See drawings for location and extent.

LANDSCAPE SEED MIX NOTES

1. Prior to installation of plant material submit all native soils, import soils, and compost to be used on site for analysis by an approved testing lab (CSU spur or approved equal) or submit US composting council safety data sheets showing testing for the following.

   1.1. Soil PH, soluble salts or electric conductivity (EC), soil organic matter (SOM), nitrogen (N), phosphorous (P), potassium (K), sulfur (S), calcium, magnesium, sodium, cation exchange capacity (CEC), micronutrients or trace minerals including: zinc (ZN), iron (FE), manganese (MN), copper (CU), and boron (B), sodium absorption ratio (SAR), and human pathogens including: ecoli, and samonella

2. Seed areas, as a minimum standard (pending recommendations from the soil testing lab), are to be tilled to a minimum depth of 12", and treated with native Colorado mycorrhizal inoculant (spread at the rate recommended by product manufacturer). Seed is to be applied using hydroseeding methods per CDOT standards including erosion control mulch at application, see specifications.

3. All native seeded areas shall receive biocomp class 1 compost based on soil analysis at time of seeding and per seed providers recommendation.

4. All areas shall be fertilized with 18-46-0 or an equivalent fertilizer that will provide necessary nitrogen and phosphorous. All necessary quantities shall be based on soil analysis at time of seeding and per seed providers recommendation. Empty fertilizer bags or weight ticket shall remain available for inspection.

5. Time of year for seeding shall be as follows: if non-irrigated native seeding shall be November 1 to May 1.

6. All seeding shall be provided by hydroseeding methods for slopes equal to or less and 3:1.

7. Slopes over 3:1 shall be hay tackified or netted.

PLANT SCHEDULE SOUTH SIDE

SYMBOL	CODE	BOTANICAL / COMMON NAME	CAL	QTY
DECIDUOUS TREES				
	QM	QUERCUS MACROCARPA BUR OAK	1.5" CAL.	10
SYMBOL	CODE	BOTANICAL / COMMON NAME	CONT	QTY
SHRUBS				
	AL	AMORPHA CANESCENS LEADPLANT	3 - 5 GAL.	15
	AC	ATRIPLEX CANESCENS FOURWING SALTBUSH	3 - 5 GAL.	8
	CM	CERCOCARPUS MONTANUS COMMON MOUNTAIN MAHOGANY	3 - 5 GAL.	37
	ER	ERICAMERIA NAUSEOSUS RUBBER RABBITBRUSH	3 - 5 GAL.	68
	RG	RHUS GLABRA SMOOTH SUMAC	3 - 5 GAL.	15
	YB	YUCCA BACCATA BANANA YUCCA	3 - 5 GAL.	15

PLANT SCHEDULE NORTH SIDE

SYMBOL	CODE	BOTANICAL / COMMON NAME	CAL	QTY
DECIDUOUS TREES				
	QM	QUERCUS MACROCARPA BUR OAK	1.5" CAL.	28
EVERGREEN TREES				
	PP	PINUS PONDEROSA PONDEROSA PINE	12' B&B	15
SYMBOL	CODE	BOTANICAL / COMMON NAME	CONT	QTY
SHRUBS				
	MA	MAHONIA AQUIFOLIUM OREGON GRAPE HOLLY	3 - 5 GAL.	39
	PC	PRUNUS VIRGINIANA MELANOCARPA NATIVE CHOKECHERRY	3 - 5 GAL.	13
	RG	RHUS GLABRA SMOOTH SUMAC	3 - 5 GAL.	24
	YB	YUCCA BACCATA BANANA YUCCA	3 - 5 GAL.	11

CUSTOM BLEND REVEGETATION SEED MIX 412,347 SF
PAWNEE BUTTES SEED INC.
10 LBS/ACRE

PLANT SPECIES	PERCENTAGE OF MIX
SANDBERG BLUEGRASS	7%
BIG BLUESTEM	3%
LITTLE BLUESTEM	9%
ROCKY MOUNTAIN FESCUE	7%
BLUE GRAMA	7%
SIDEOATS GRAMA	9%
INDIANGRASS	9%
INDIAN RICEGRASS	3%
SWITCHGRASS	3%
CANADA WILDRYE	1%
BLUEBUNCH WHEATGRASS	10%
SLENDER WHEATGRASS	10%
WESTERN WHEATGRASS	10%
GREEN NEEDLEGRASS	7%
NEEDLE AND THREAD	1%

1/58 LANDSCAPE SCHEDULE

dtj DESIGN
ARCHITECTURE
PLANNING
LANDSCAPE ARCHITECTURE

DTJ DESIGN, Inc.
3101 Iris Avenue, Suite 130
Boulder, Colorado 80301
T 303.443.7533

www.dtjdesign.com

HILLCAMP RIDGEGATE DRIVE
LANDSCAPE PLANS
LONE TREE, COLORADO

DAVID AUSTIN IGNATEW
563
06/25/26
Original Date of Licensure
STATE OF COLORADO
LICENSED LANDSCAPE ARCHITECT

DRAWN BY: DTJ
CHECKED BY: DTJ
PROJECT NO.: 2022092.10
ISSUE DATE: 09/04/2026
REVISIONS:

SHEET TITLE:
PLANT NOTES & SCHEDULE

SHEET NUMBER:
58

Drawing: U:\2022092.10 Brookfield Mesa Top\05 CAD\Sheets\03_PEDESTRIAN BRIDGE LANDSCAPE PLAN\L400 - L2XX LANDSCAPE DETAILS.dwg
Last Saved: July 2, 2026 4:06:57 PM by ASchlotfeldt
Last Plotted 9/8/2026 12:09:10 PM
COPYRIGHT © ALL RIGHTS RESERVED DTJ DESIGN, INC. 2019

TREE PROTECTION PLAN NOTES

1. Critical Root Zones (CRZ)
   1.1. The CRZ is the area around a tree in which its roots may be expected to be found. According to industry best management practices, a tree's CRZ may vary between 0.5 and 1.5 feet of radius per inch of trunk diameter. The size varies based on species susceptibility to root loss, age of tree, and condition of tree.

2. Tree Protection Fence (TPF)
   2.1. TPF is fencing that excludes construction activities from as much of the CRZ of a tree as possible.
   2.2. TPF is required only in areas in close proximity to concerning impacts, which include:
   - Equipment traffic
   - Heavy foot traffic over soil with roots
   - Excavation
   - Materials and equipment storage

   2.3. The type of fencing used should be one of the following, considering the type of impact.
   - 6-foot chain link – (in cases where substantial heavy equipment use will occur)
   - Welded wire - (in cases where projects involve moderate intensity of activity)
   - Orange 'snow fence' – (in cases where projects are shorter in duration and only hand tools and foot traffic will be used.)

   2.4. In some cases, TPF may not be required if:
   - Only low-intensity foot traffic is passing near a tree with no other work or storage.
   - Excavation is sufficiently far from a tree.
   - A sufficiently small amount of materials will be stored for the project and there is no risk of stored materials compacting soil within the CRZ.

3. Equipment Usage
   3.1. Heavy equipment can damage trees in many ways including the following:
   - Excavation can damage roots
   - Equipment movement and storage can compact soil and damage roots
   - Equipment movement near trees can lead to collisions and scrapes that cause damage

4. Root Protection Matting/Soil Compaction
   4.1. Root protection matting seeks to reduce the soil compaction caused by construction activities within a tree's CRZ in cases where the CRZ cannot be completely protected by TPF. Construction activities can lead to soil compaction in the following ways:
   - Heavy equipment traffic
   - Storage of materials and/or soil spoils
   - Excessive foot traffic

   4.2. The type of root protection matting required will vary based on the intensity of the traffic it needs to support.
   - 6-inch layer of woodchips (for moderate foot traffic)
   - 6-inch layer of woodchips plus secured pieces of ¾ plywood or polyethylene mats (for extended periods of heavy foot traffic and for light equipment traffic)
   - 12-inch layer of woodchips with polyethylene mats. (for extensive equipment usage)

5. Root Pruning
   5.1. Root Pruning is the proactive severing of roots using a clean cut in advance of a future excavation. Root pruning can be used to accomplish the following:
   - Avoiding risk of machine excavation pulling uncut roots and causing impacts to roots intended to be preserved
   - Timing the cutting of roots for the dormant season when the tree is better equipped to handle the stress of root-loss.

   5.2. Any mechanical excavation of a significant portion of a CRZ will require root pruning in advance. Root pruning should typically be done to a minimum depth of 18 inches.

Drawing: U:\2022092.10 Brookfield Mesa Top\05 CAD\X-Exhibits\TREE PROTECTION PLAN - ENTRY.dwg
Last Saved: July 16, 2026 3:06:40 PM by Scontreras
Last Plotted 9/8/2026 12:07:22 PM
COPYRIGHT © ALL RIGHTS RESERVED DTJ DESIGN, INC. 2019

dtj DESIGN
ARCHITECTURE
PLANNING
LANDSCAPE ARCHITECTURE

DTJ DESIGN, Inc.
3101 Iris Avenue, Suite 130
Boulder, Colorado 80301
T 303.443.7533

www.dtjdesign.com

HILLCAMP RIDGEGATE DRIVE
LANDSCAPE PLANS
LONE TREE, COLORADO

DAVID AUSTIN IGNATEW
563
06/25/08
Original Date of Licensure
STATE OF COLORADO
LICENSED LANDSCAPE ARCHITECT

DRAWN BY:	DTJ
CHECKED BY:	DTJ
PROJECT NO.:	2022092.10
ISSUE DATE:	09/04/2026
REVISIONS:	

SHEET TITLE:
TREE PROTECTION NOTES

SHEET NUMBER:
59

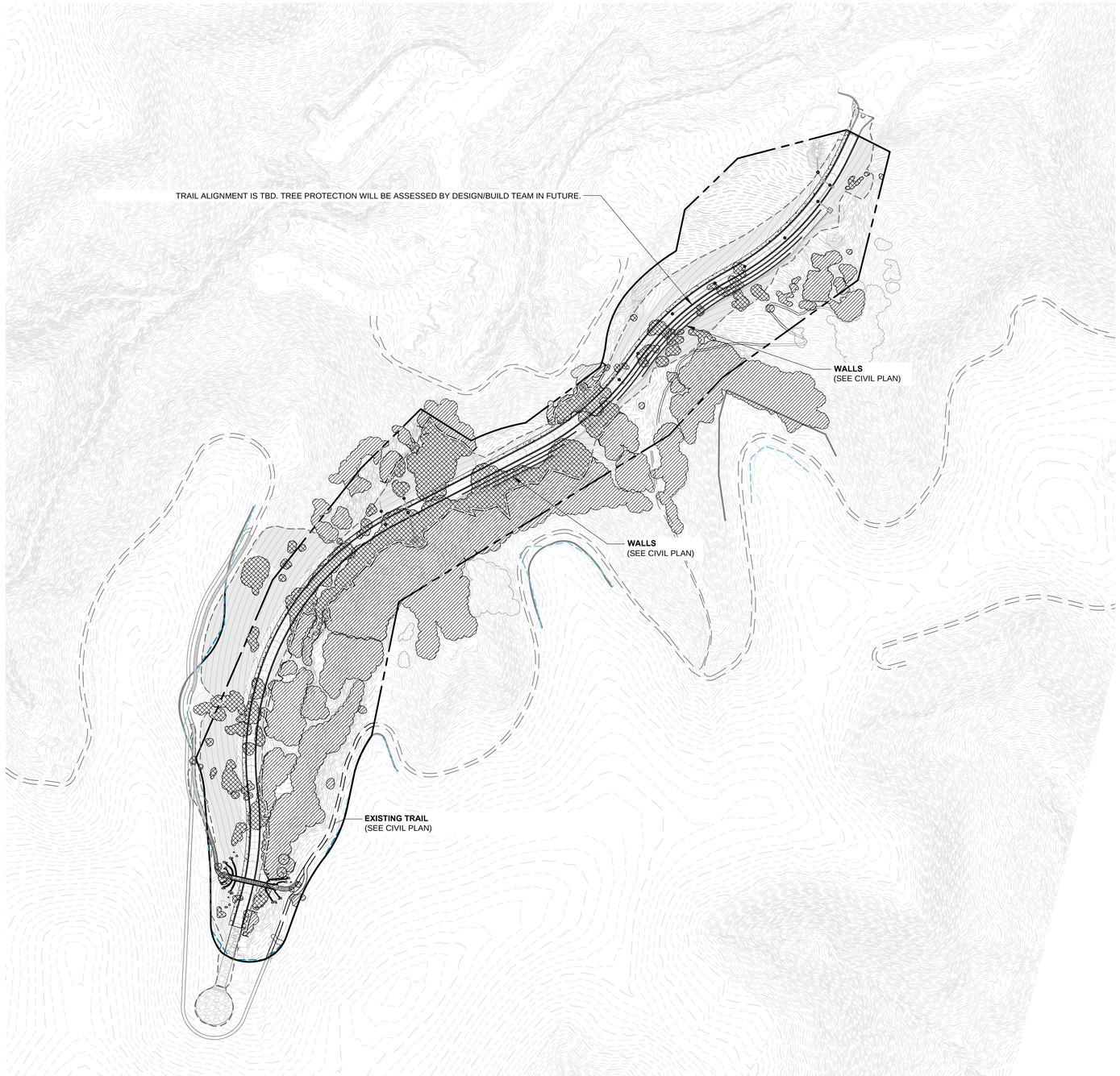

LEGEND	
	PROPERTY BOUNDRY
	LIMIT OF WORK
	EXISTING SCRUB OAK BOUNDARY
	TREES TO BE PROTECTED
	TREES TO BE REMOVED
	TREE PROTECTION FENCE

0' 150' 300' 450'
1 = 150'

NORTH

dtj DESIGN

ARCHITECTURE
PLANNING
LANDSCAPE ARCHITECTURE

DTJ DESIGN, Inc.
3101 Iris Avenue, Suite 130
Boulder, Colorado 80301
T 303.443.7533

www.dtjdesign.com

HILLCAMP RIDGEGATE DRIVE
LANDSCAPE PLANS

LONE TREE, COLORADO

DAVID AUSTIN IGNATEW
563
06/25/08
Original Date of Licensure
STATE OF COLORADO
LICENSED LANDSCAPE ARCHITECT

DRAWN BY:	DTJ
CHECKED BY:	DTJ
PROJECT NO.:	2022092.10
ISSUE DATE:	09/04/2026
REVISIONS:	

SHEET TITLE:

TREE PROTECTION PLAN

SHEET NUMBER:

60

Drawing: U:\2022092.10-Brookfield Mesa Top\05 CAD\X-Exhibits\TREE PROTECTION PLAN - ENTRY.dwg
Last Saved: July 16, 2026 3:06:40 PM by Scontreras
Last Plotted 9/8/2026 12:06:36 PM

COPYRIGHT © ALL RIGHTS RESERVED DTJ DESIGN, INC. 2019

GENERAL NOTES

ALL WORK SHALL BE DONE IN ACCORDANCE WITH (IN ORDER OF PRECEDENCE): CITY OF LONE TREE CONSTRUCTION SPECIFICATIONS AND THE COLORADO DEPARTMENT OF TRANSPORTATION STANDARD CONSTRUCTION SPECIFICATIONS, CURRENT EDITION.

EXCEPT AS SHOWN IN THE PLANS, STRUCTURE EXCAVATION AND BACKFILL SHALL BE IN ACCORDANCE WITH M-206-2.

GRADE 60 REINFORCING STEEL IS REQUIRED.

ALL REINFORCING STEEL SHALL BE EPOXY COATED BAR UNLESS OTHERWISE NOTED.

EXCEPT WHERE DETAILED OTHERWISE IN THESE PLANS, THE FOLLOWING TABLE GIVES THE MINIMUM LAP SPLICE LENGTH FOR REINFORCING BARS.

SPLICE LENGTH FOR CLASS D CONCRETE

EPOXY BAR SIZE	#4	#5	#6	#7	#8	#9	#10	#11
Ld (HORIZONTAL)	2'-4"	2'-11"	4'-4"	5'-1"	5'-9"	7'-2"	8'-10"	10'-8"
Ld (VERTICAL)	1'-10"	2'-3"	3'-4"	3'-11"	4'-5"	5'-6"	6'-10"	8'-2"

THE CONTRACTOR SHALL BE RESPONSIBLE FOR THE STABILITY OF THE STRUCTURES DURING CONSTRUCTION.

E.F. =	EACH FACE	O.F. =	OUTSIDE FACE
F.F. =	FAR FACE	T.&B. =	TOP AND BOTTOM
N.F. =	NEAR FACE	T.F. =	TOP FACE
I.F. =	INSIDE FACE	B.F. =	BOTTOM FACE
O.C. =	ON CENTER	T.B.D.=	TO BE DETERMINED

STATIONS, ELEVATIONS, AND DIMENSIONS CONTAINED IN THESE PLANS ARE CALCULATED FROM A RECENT FIELD SURVEY. THE CONTRACTOR SHALL VERIFY ALL DEPENDENT DIMENSIONS IN THE FIELD BEFORE ORDERING OR FABRICATING ANY MATERIAL.

THE INFORMATION SHOWN ON THESE PLANS CONCERNING THE TYPE AND LOCATION OF UNDERGROUND UTILITIES IS NOT GUARANTEED TO BE ACCURATE OR ALL INCLUSIVE. THE CONTRACTOR IS RESPONSIBLE FOR MAKING HIS OWN DETERMINATION AS TO THE TYPE AND LOCATION OF UNDERGROUND UTILITIES AS MAY BE NECESSARY TO AVOID DAMAGE THERETO. THE CONTRACTOR SHALL CONTACT THE UTILITY NOTIFICATION CENTER OF COLORADO AT 1-800-922-1987 AT LEAST 2 DAYS (NOT INCLUDING THE DAY OF NOTIFICATION) PRIOR TO ANY EXCAVATION OR OTHER EARTHWORK.

ALL CAST-IN-PLACE CONCRETE SHALL BE CDOT CLASS D UNLESS NOTED OTHERWISE.

ALL REINFORCING SHALL BE TIED AND CAST-IN UNLESS NOTED OTHERWISE OR APPROVED BY ENGINEER. DRILLED AND EPOXIED REINFORCING BARS, WHEN APPROVED, SHALL BE EMBEDDED A MINIMUM OF 6 INCHES OR AS SPECIFIED BY THE EPOXY MANUFACTURER.

ALL EXPOSED EDGES TO RECEIVE A 3/4" CHAMFER.

ALL ANCHORS SHALL BE INSTALLED IN STRICT ACCORDANCE WITH MANUFACTURERS RECOMMENDATIONS.

STRUCTURE DESCRIPTION

PEDESTRIAN BRIDGE:

1-SPAN 120'-0", PREFABRICATED STEEL BRIDGE WITH CONCRETE DECK ON CAST-IN-PLACE CONCRETE ABUTMENTS ON DRILLED CAISSONS.

CARRYING DOUGLAS COUNTY EAST-WEST TRAIL OVER HILLCAMP DRIVE.

12'-0" BRIDGE CLEAR WIDTH.

NO SKEW

BLOCK RETAINING WALLS:

VARYING LENGTH AND HEIGHT ROSETTA STONE RETAINING WALLS WITH CONCRETE BACKFILL

DESIGN DATA

DESIGN CODES:
AASHTO, 9th EDITION LRFD 2020

DESIGN METHOD: LOAD AND RESISTANCE FACTOR DESIGN.

LIVE LOAD:

VEHICLE LOAD:	AASHTO H10 DESIGN VEHICLE
PEDESTRIAN LOAD:	90 PSF

EARTH LOADING (CDOT CLASS 5 OR 6 FILL):

UNIT WEIGHT:	120 PCF (ASSUMED)
ACTIVE EQUIVALENT FLUID PRESSURE:	45 PCF (PER GEOTECHNICAL REPORT)
AT-REST EQUIVALENT FLUID PRESSURE:	65 PCF (PER GEOTECHNICAL REPORT)
PASSIVE EQUIVALENT FLUID PRESSURE:	320 PCF (PER GEOTECHNICAL REPORT)
LIVE LOAD SURCHARGE:	1 FEET OF EARTH

FOUNDATION SOILS:

SLIDING FRICTION FACTOR:	0.39 (PER GEOTECHNICAL REPORT)
ALLOWABLE BEARING PRESSURE:	2.0 KSF (ASSUMED)
CAISSON SOIL RESISTANCES:	SEE CAISSON DETAILS SHEET

REINFORCED CONCRETE:

CLASS BZ CONCRETE:	f'c = 4,000 psi
CLASS D CONCRETE:	f'c = 4,500 psi
REINFORCING STEEL:	f'y = 60,000 psi

REFER TO THE GEOTECHNICAL ENGINEERING STUDY FOR PROJECT NO. DN52,378.00-125-R1 BY CTL THOMPSON, INC, AND ANY ADDENDA THERETO, FOR ADDITIONAL INFORMATION AND REQUIREMENTS.

BRIDGE STRUCTURE NOTES

1. PREFABRICATED BRIDGE STRUCTURE TO BE DESIGNED AND DETAILED BY BRIDGE MANUFACTURER BASED ON ALL APPLICABLE CODES. STRUCTURE MEMBERS TO BE DESIGNED AND DETAILED INCLUDE (BUT ARE NOT LIMITED TO):
   - TRUSS MEMBERS
   - SAFETY RAIL
   - DECK
   - BEARING ASSEMBLIES
   - ANCHOR BOLTS
2. ABUTMENT GEOMETRIES FOR PREFABRICATED TRUSS BRIDGES ARE DEPENDENT, THEREFORE IT IS CRITICAL THAT ALL DEPENDENT DIMENSIONS BE VERIFIED WITH THE BRIDGE MANUFACTURER'S APPROVED SHOP DRAWINGS PRIOR TO CONSTRUCTION OF ABUTMENTS AND SETTING OF BRIDGE. DEPENDING ON FABRICATION DETAILS, DIMENSIONS OF ABUTMENTS SHALL BE MODIFIED ACCORDINGLY. THESE DIMENSIONS INCLUDE:
   - BEARING SEAT ASSEMBLY SIZES AND LAYOUT
   - HEIGHT FROM BEARING SEAT TO TOP OF DECK
   - BRIDGE END-TO-END LENGTH
   - BRIDGE OUT-TO-OUT WIDTH AT BEARING SEAT
   - DECK SLOPE AT BRIDGE ENDS DUE TO CAMBER
3. BEARING ASSEMBLIES SHALL BE DESIGNED BY MANUFACTURER AND SHALL BE DESIGNED TO TRANSMIT NO MORE THAN 25% OF THE BRIDGE DEAD LOAD THROUGH FRICTION TRANSFER TO THE ABUTMENT AS A RESULT OF TEMPERATURE EXPANSION AND CONTRACTION FORCES.

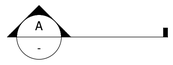

SECTION OR DETAIL IDENTIFICATION

CROSS-REFERENCE SHEET NUMBER (- = SAME SHEET)

SHEET LIST

61	GENERAL INFORMATION
62	BRIDGE GENERAL LAYOUT
63	CAISSON DETAILS
64	ABUTMENT 1 PLAN & ELEVATION
65	ABUTMENT 2 PLAN & ELEVATION
66	ABUTMENT DETAILS
67	MISCELLANEOUS DETAILS
68	RAILING DETAILS (1 OF 2)
69	RAILING DETAILS (2 OF 2)
70	WEST WALL LAYOUT PLAN
71	WEST WALL ELEVATIONS
72	WEST WALL SECTIONS (1 OF 2)
73	WEST WALL SECTIONS (2 OF 2)
74	EAST WALL LAYOUT PLAN
75	EAST EALL ELEVATIONS
76	EAST WALL SECTIONS (1 OF 3)
77	EAST WALL SECTIONS (2 OF 3)
78	EAST WALL SECTIONS (3 OF 3)
79	WALL DETAILS (1 OF 2)
80	WALL DETAILS (2 OF 2)

RETAINING WALL GENERAL NOTES

1. ALL RETAINING WALL SYSTEMS SHALL BE AS MANUFACTURED BY ROSETTA STONE. ALTERNATE BLOCK MANUFACTURERS WILL NOT BE ACCEPTED.
2. CONSTRUCTION AND INSTALLATION SHALL ALSO BE IN STRICT ACCORDANCE WITH MANUFACTURER'S RECOMMENDATIONS.
3. BLOCK COLORS, TEXTURES, AND PATTERNS SHALL BE APPROVED BY THE LANDSCAPE ARCHITECT AND OWNER PRIOR TO FABRICATION AND CONSTRUCTION.
4. IT IS THE CONTRACTOR'S RESPONSIBILITY TO HAVE SHOP DRAWINGS AND PREPARED FOR RETAINING WALLS AND SUBMITTED FOR REVIEW AND APPROVAL.
5. CONCRETE BACKFILL IS SPECIFIED HEREIN AS THE METHOD OF PROVIDING EXTERNAL STABILITY, IN CONFORMANCE WITH STANDARD PRACTICE WITH ROSETTA STONE SYSTEMS. AT CONTRACTOR'S OPTION, MECHANICALLY-STABILIZED EARTH BACKFILL MAY BE PROPOSED AS AN ALTERNATE METHOD OF PROVIDING EXTERNAL STABILITY. IF DEVIATIONS FROM THE SPECIFIED DETAILS ARE PROPOSED, IT SHALL BE THE CONTRACTOR'S RESPONSIBILITY TO PROVIDE SUBSTANTIATING STRUCTURAL CALCULATIONS FOR THE RETAINING WALLS. ALL SUCH SUBMITTALS SHALL BEAR THE SEAL OF A PROFESSIONAL ENGINEER REGISTERED IN THE STATE OF COLORADO.
6. IF ALTERNATE BACKFILL SYSTEMS ARE PROPOSED AS DISCUSSED ABOVE, SHOP DRAWINGS AND CALCULATIONS SHALL ADDRESS ALL OF THE FOLLOWING CONDITIONS:
   - 6.1. LOCAL GEOTECHNICAL CONDITIONS PER PROJECT GEOTECHNICAL REPORT.
   - 6.2. WALL CONFIGURATION AND GEOMETRY AT EACH TYPICAL CONDITION THROUGHOUT THE SITE.
   - 6.3. WALL SYSTEM INTERNAL STABILITY
   - 6.4. WALL SYSTEM EXTERNAL STABILITY
   - 6.5. GLOBAL STABILITY
   - 6.6. STABILITY OF SLOPES BETWEEN WALL TIERS

COLORADO REGISTERED PROFESSIONAL ENGINEER
08/31/2026

UNTIL SUCH TIME AS THESE DRAWINGS ARE APPROVED BY THE APPROPRIATE REVIEWING AGENCIES, JR ENGINEERING APPROVES THEIR USE ONLY FOR THE PURPOSES DESIGNATED BY WRITTEN AUTHORIZATION.

PREPARED FOR
RAMPART RANGE METRO DISTRICT
8390 E CRESCENT PKWY
SUITE 300
GREENWOOD VILLAGE, CO 80111
PHONE: 303-779-5710

San Engineering
Civil & Structural Engineering
1150 W. LITTLETON BLVD. #200
LITTLETON, CO 80120
303.953.9014 www.sanengineeringllc.com

No.	REVISION	BY	DATE

H-SCALE	
V-SCALE	
DATE	09/02/26
DESIGNED BY	KSP
DRAWN BY	KSP
CHECKED BY	JJM

HILLCAMP DRIVE

PEDESTRIAN BRIDGE OVER HILLCAMP DRIVE

GENERAL INFORMATION

SHEET 61 OF 80

JOB NO. 15950.18

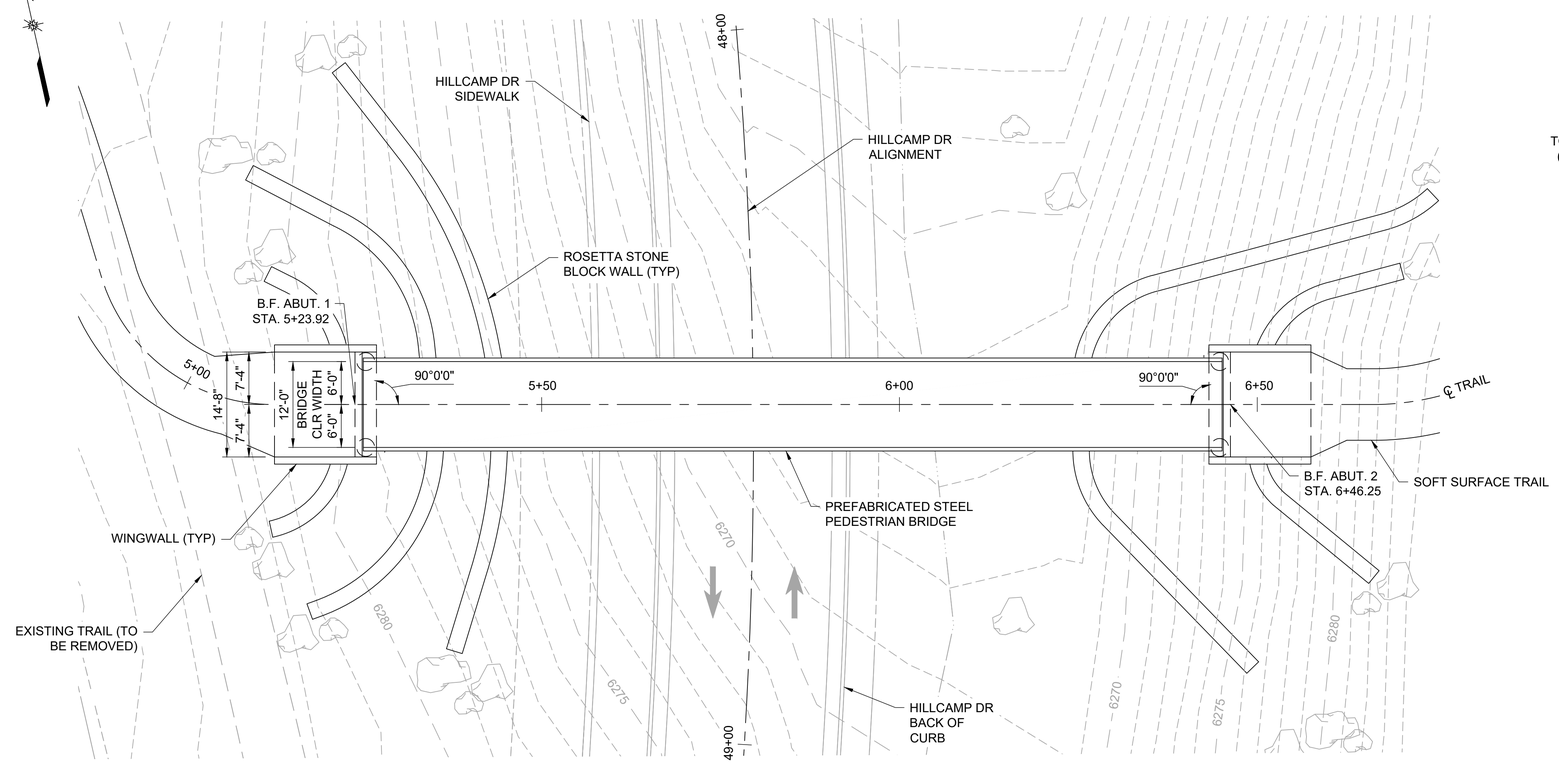

BRIDGE PLAN

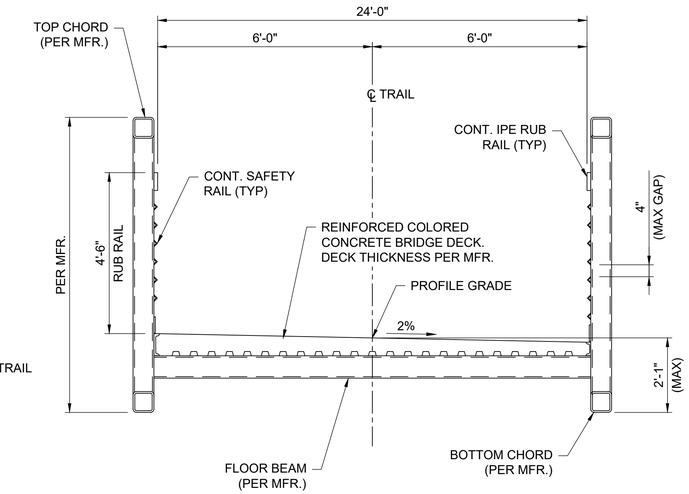

BRIDGE TYPICAL SECTION

(LOOKING AHEAD STATION)

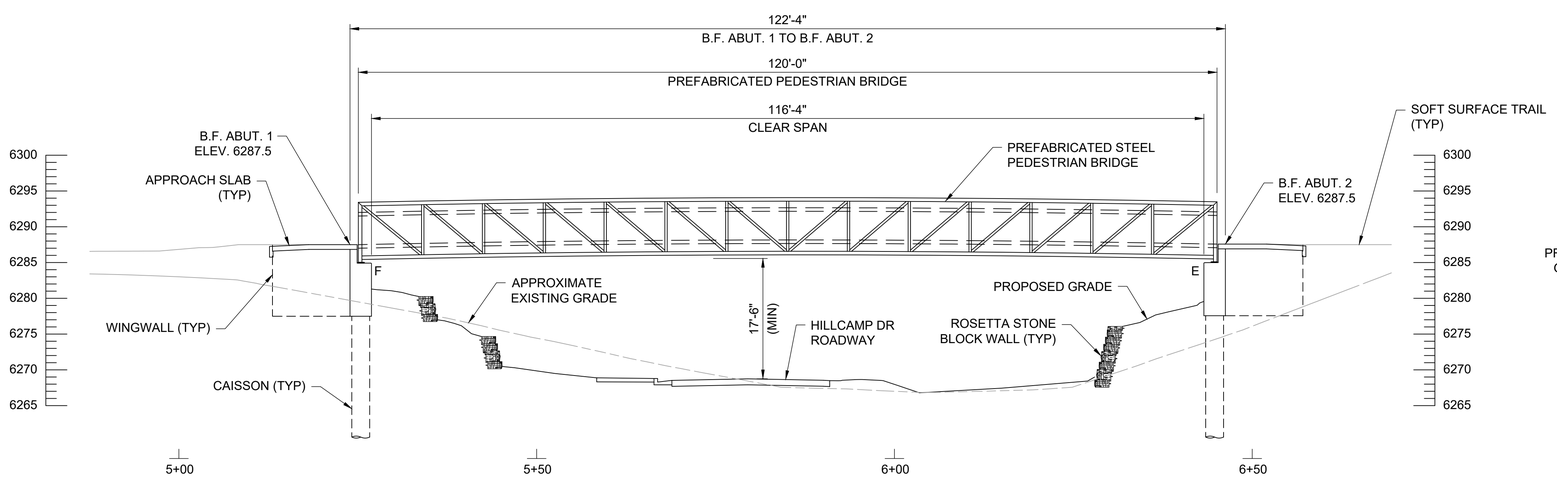

BRIDGE SECTION

NOTE: CAMBER SPECIFIED IS TO BE FINAL DECK CAMBER AFTER ESTIMATED DEAD LOAD DEFLECTIONS.

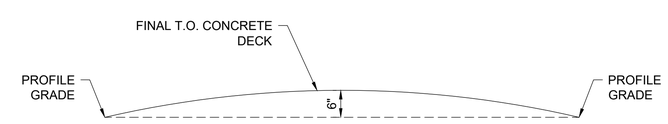

BRIDGE CAMBER DIAGRAM

UNTIL SUCH TIME AS THESE DRAWINGS ARE APPROVED BY THE APPROPRIATE REVIEWING AGENCIES, JR ENGINEERING APPROVES THEIR USE ONLY FOR THE PURPOSES DESIGNATED BY WRITTEN AUTHORIZATION.

PREPARED FOR
RAMPART RANGE METRO DISTRICT
8390 E CRESCENT PKWY
SUITE 300
GREENWOOD VILLAGE, CO 80111
PHONE: 303-779-5710

San Engineering
Civil & Structural Engineering
1150 W. LITTLETON BLVD. #200
LITTLETON, CO 80120
303.953.9014 www.sanengineeringllc.com

No.	REVISION	BY	DATE

H-SCALE	
V-SCALE	
DATE	09/02/26
DESIGNED BY	KSP
DRAWN BY	KSP
CHECKED BY	JJM

HILLCAMP DRIVE

PEDESTRIAN BRIDGE OVER HILLCAMP DRIVE

BRIDGE GENERAL LAYOUT

SHEET 62 OF 80

JOB NO. 15950.18

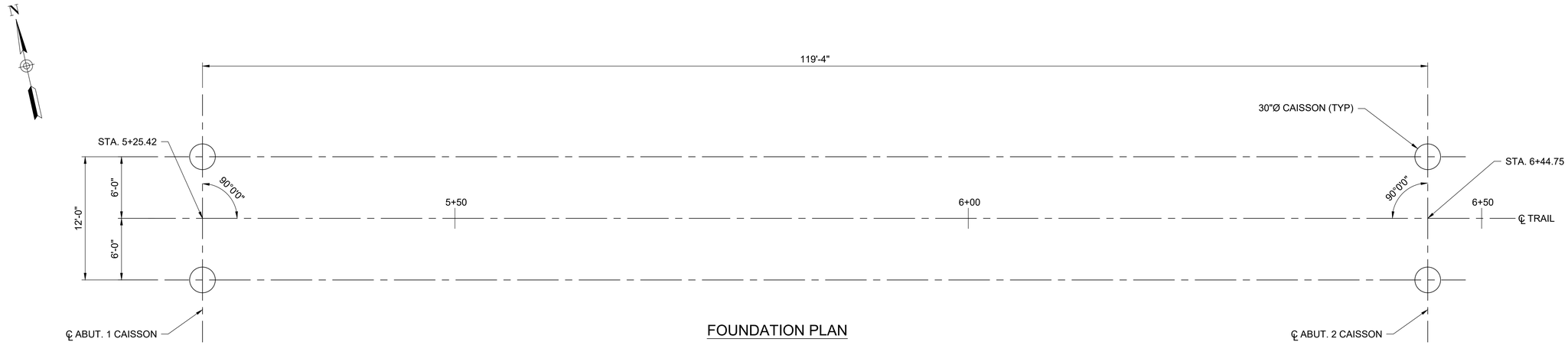

FOUNDATION PLAN

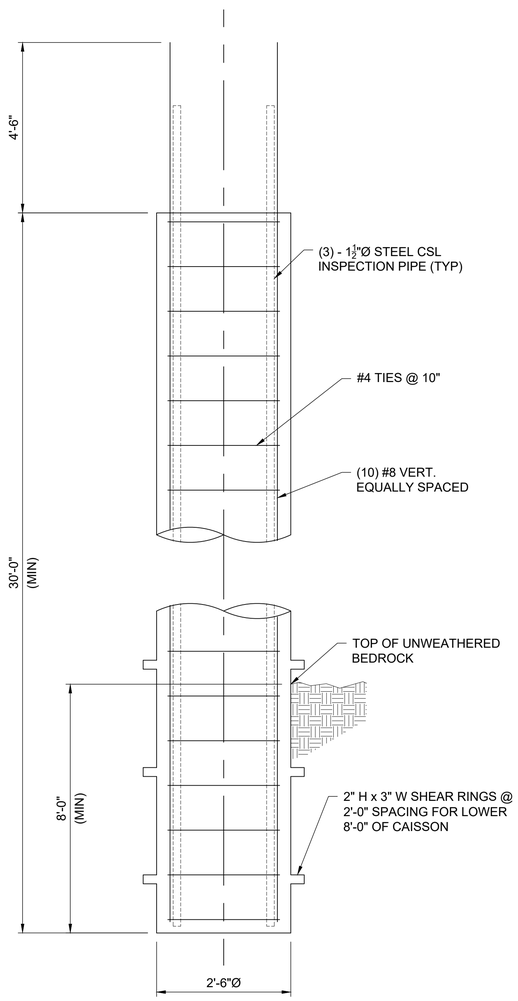

CAISSON DETAIL

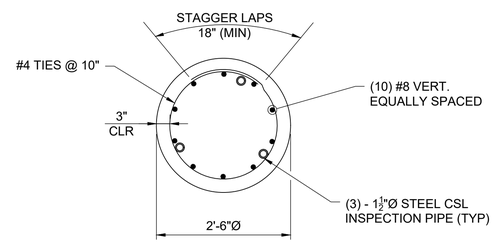

CAISSON SECTION

CAISSON NOTES:

1. ULTIMATE END BEARING PRESSURE IN BEDROCK = 35,000 PSF. END BEARING PRESSURE STATIC RESISTANCE FACTOR = 0.55.
2. ULTIMATE SIDE SHEAR RESISTANCE IN BEDROCK = 3,500 PSF. SIDE SHEAR STATIC RESISTANCE FACTOR = 0.60.
3. CAISSON CONCRETE SHALL BE CLASS BZ.
4. IF REINFORCING SPLICES ARE REQUIRED, MINIMUM LAP LENGTH SHALL BE AS FOLLOWS:

SPLICE LENGTH FOR CLASS D CONCRETE								
BAR SIZE	#4	#5	#6	#7	#8	#9	#10	#11
LENGTH	1'-10"	2'-3"	3'-4"	3'-11"	4'-5"	5'-6"	6'-10"	8'-2"

5. TEMPORARY CASING AND DEWATERING MAY BE REQUIRED DUE TO GROUNDWATER ENCOUNTERED DURING GEOTECHNICAL EXPLORATION.
6. WHERE WATER OR SLURRY IS PRESENT IN THE DRILLED CAISSON HOLE, INCLUDING OUTSIDE OF A CASING THAT WILL BE WITHDRAWN FROM THE HOLE, THE CONCRETE PLACED FOR THE CAISSON SHOULD BE PLACED WITH SUFFICIENT HEAD MAINTAINED ABOVE GROUNDWATER LEVEL SO THAT THE CONCRETE IS NOT DISPLACED IN THE BODY OF THE CAISSON BY WATER, SOIL, SLURRY, ETC.
7. CAISSON HOLES SHALL BE CLEANED, DEWATERED, AND INSPECTED PRIOR TO PLACING REINFORCING AND CONCRETE.
8. REFER TO GEOTECHNICAL REPORT BY CTL THOMPSON FOR ADDITIONAL INFORMATION AND REQUIREMENTS FOR CAISSON CONSTRUCTION.
9. DRILLED CAISSONS ARE TO BE FOUNDED INTO UNWEATHERED BEDROCK. THE ENGINEER OR HIS/HER REPRESENTATIVE SHALL BE PRESENT TO OBSERVE DRILLING AND TO DETERMINE THE SUITABILITY OF THE BEDROCK FOR THE ENTIRE PENETRATION OF THE CAISSON.
10. DRILLED CAISSONS SHALL MEET BOTH THE REQUIRED MINIMUM CAISSON LENGTH AND A MINIMUM EMBEDMENT LENGTH OF 6 FEET INTO UNWEATHERED BEDROCK.
11. DURING DRILLED SHAFT CONSTRUCTION, NON-DESTRUCTIVE TESTING SHALL BE USED ON ALL DRILLED SHAFTS AT THE ABUTMENTS TO EVALUATE THE INTEGRITY OF DRILLED SHAFTS AND CONTRACTOR METHODS. CROSS SONIC LOG (CSL) SHALL BE USED IN ACCORDANCE WITH CDOT STANDARDS SECTION 503.
12. CSL INSPECTION PIPES SHALL EXTEND FROM THE BOTTOM OF DRILLED SHAFT TO 2'-0" MINIMUM ABOVE TOP OF DRILLED SHAFT. STEEL PIPE SHALL BE NON-GALVANIZED. SEE CDOT STANDARD SPECIFICATIONS FOR ADDITIONAL INFORMATION.

COLORADO REGISTERED PROFESSIONAL ENGINEER
08/31/2026

CAISSON DATA					
LOCATION	SIZE	EST. BEDROCK ELEVATION (FT)	EST. TIP ELEVATION (FT)	MIN. CAISSON LENGTH (FT)	MAX. FACTORED LOAD (KIP)*
ABUTMENT 1	24"	6272.00	6248.25	30'	158
ABUTMENT 2	24"	6258.00	6248.25	30'	158

*MAX FACTORED LOAD DOES NOT INCLUDE CAISSON SELF-WEIGHT

UNTIL SUCH TIME AS THESE DRAWINGS ARE APPROVED BY THE APPROPRIATE REVIEWING AGENCIES, JR ENGINEERING APPROVES THEIR USE ONLY FOR THE PURPOSES DESIGNATED BY WRITTEN AUTHORIZATION.

PREPARED FOR
RAMPART RANGE METRO DISTRICT
8390 E CRESCENT PKWY
SUITE 300
GREENWOOD VILLAGE, CO 80111
PHONE: 303-779-5710

San Engineering
Civil & Structural Engineering
1150 W. LITTLETON BLVD. #200
LITTLETON, CO 80120
303.953.9014 www.sanengineeringllc.com

No.	REVISION	BY	DATE

H-SCALE	
V-SCALE	
DATE	09/02/26
DESIGNED BY	KSP
DRAWN BY	KSP
CHECKED BY	JJM

HILLCAMP DRIVE
PEDESTRIAN BRIDGE OVER HILLCAMP DRIVE
CAISSON DETAILS

SHEET 63 OF 80
JOB NO. 15950.18

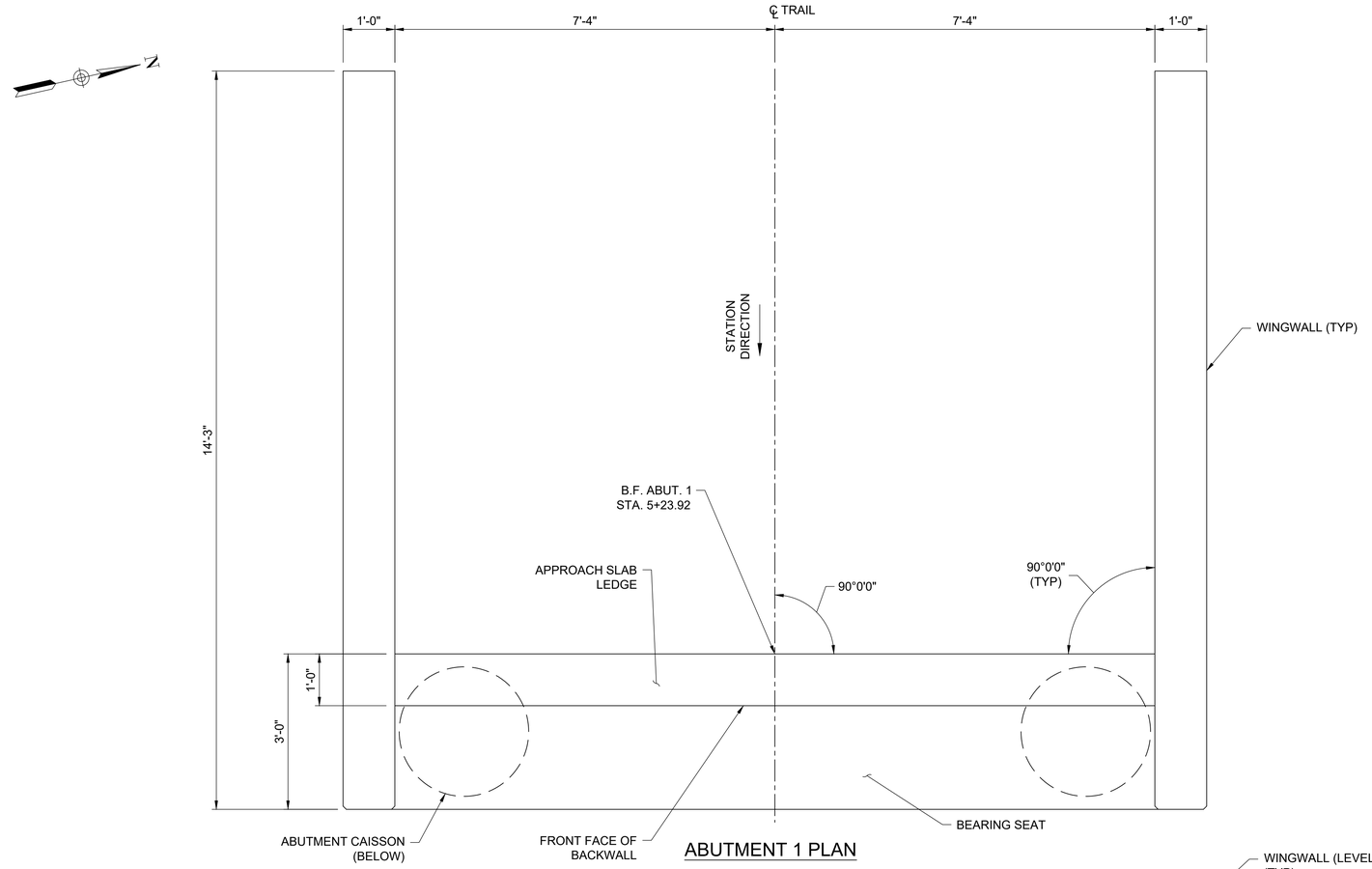

ABUTMENT 1 PLAN

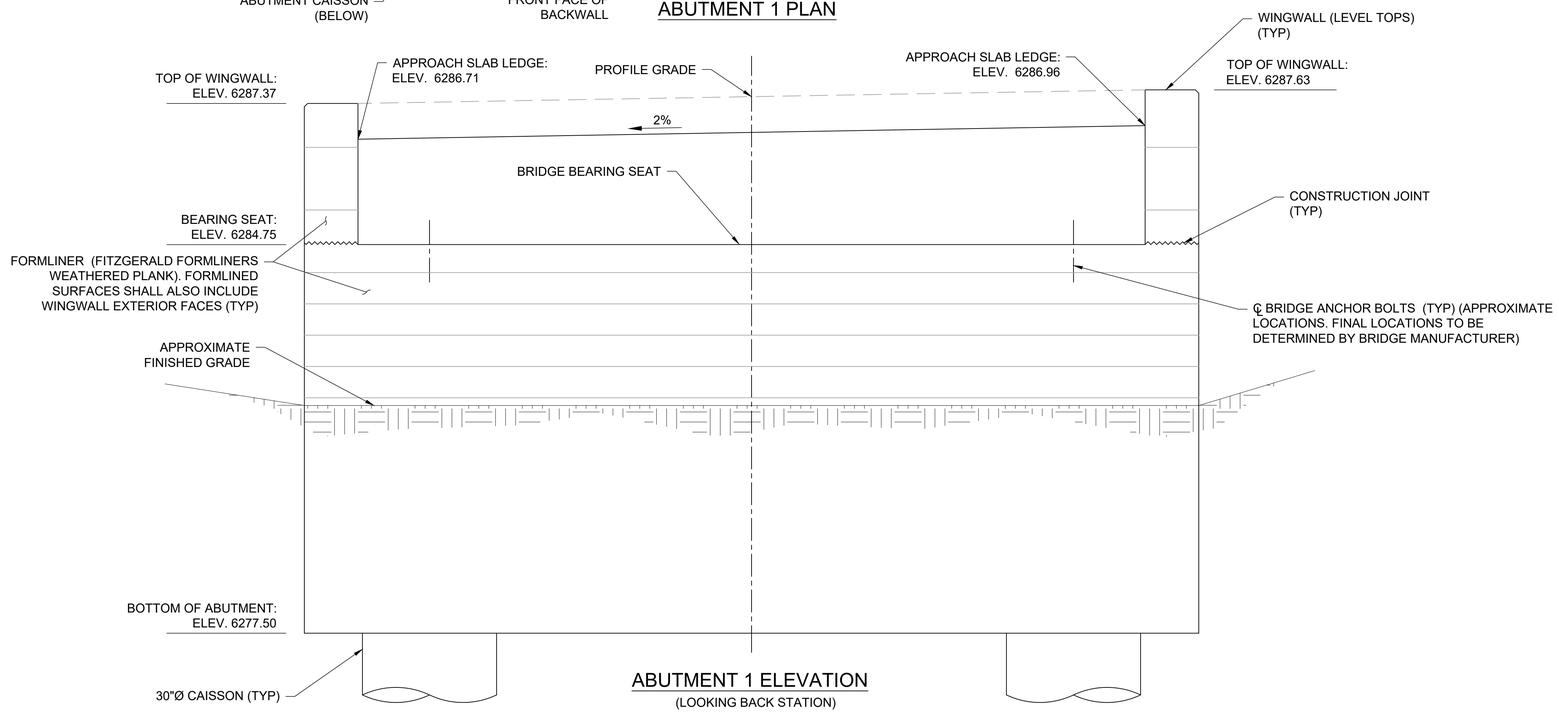

ABUTMENT 1 ELEVATION

(LOOKING BACK STATION)

ABUTMENT CONSTRUCTION NOTES:

1. ABUTMENT GEOMETRIES FOR PREFABRICATED TRUSS BRIDGES ARE DEPENDENT, THEREFORE IT IS CRITICAL THAT ALL DEPENDENT DIMENSIONS BE VERIFIED WITH THE BRIDGE MANUFACTURER'S APPROVED SHOP DRAWINGS PRIOR TO CONSTRUCTION OF ABUTMENTS AND SETTING OF BRIDGE. DEPENDING ON FABRICATION DETAILS, DIMENSIONS OF ABUTMENTS SHALL BE MODIFIED ACCORDINGLY. THESE DIMENSIONS INCLUDE:

- BEARING SEAT ASSEMBLY SIZES AND LAYOUT
- HEIGHT FROM BEARING SEAT TO TOP OF DECK
- BRIDGE END-TO-END LENGTH
- BRIDGE OUT-TO-OUT WIDTH AT BEARING SEAT
- DECK SLOPE AT BRIDGE ENDS DUE TO CAMBER

UNTIL SUCH TIME AS THESE DRAWINGS ARE APPROVED BY THE APPROPRIATE REVIEWING AGENCIES, JR ENGINEERING APPROVES THEIR USE ONLY FOR THE PURPOSES DESIGNATED BY WRITTEN AUTHORIZATION.

PREPARED FOR
RAMPART RANGE METRO DISTRICT
8390 E CRESCENT PKWY
SUITE 300
GREENWOOD VILLAGE, CO 80111
PHONE: 303-779-5710

San Engineering
Civil & Structural Engineering
1150 W. LITTLETON BLVD. #200
LITTLETON, CO 80120
303.953.9014 www.sanengineeringllc.com

No.	REVISION	BY	DATE

H-SCALE	
V-SCALE	
DATE	09/02/26
DESIGNED BY	KSP
DRAWN BY	KSP
CHECKED BY	JJM

HILLCAMP DRIVE

PEDESTRIAN BRIDGE OVER HILLCAMP DRIVE

ABUTMENT 1 PLAN & ELEVATION

COLORADO REGISTERED PROFESSIONAL ENGINEER
08/31/2026

SHEET 64 OF 80

JOB NO. 15950.18

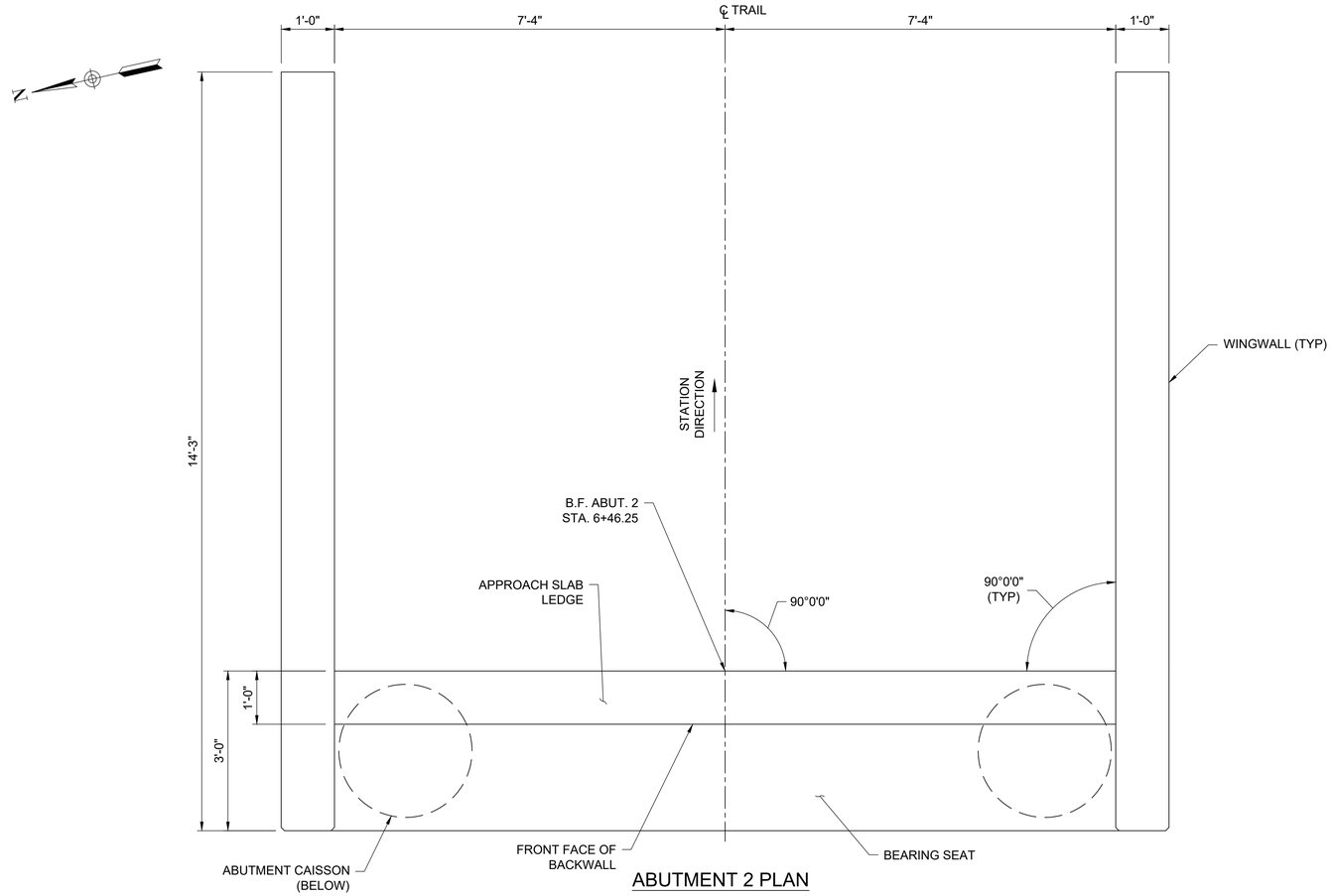

ABUTMENT 2 PLAN

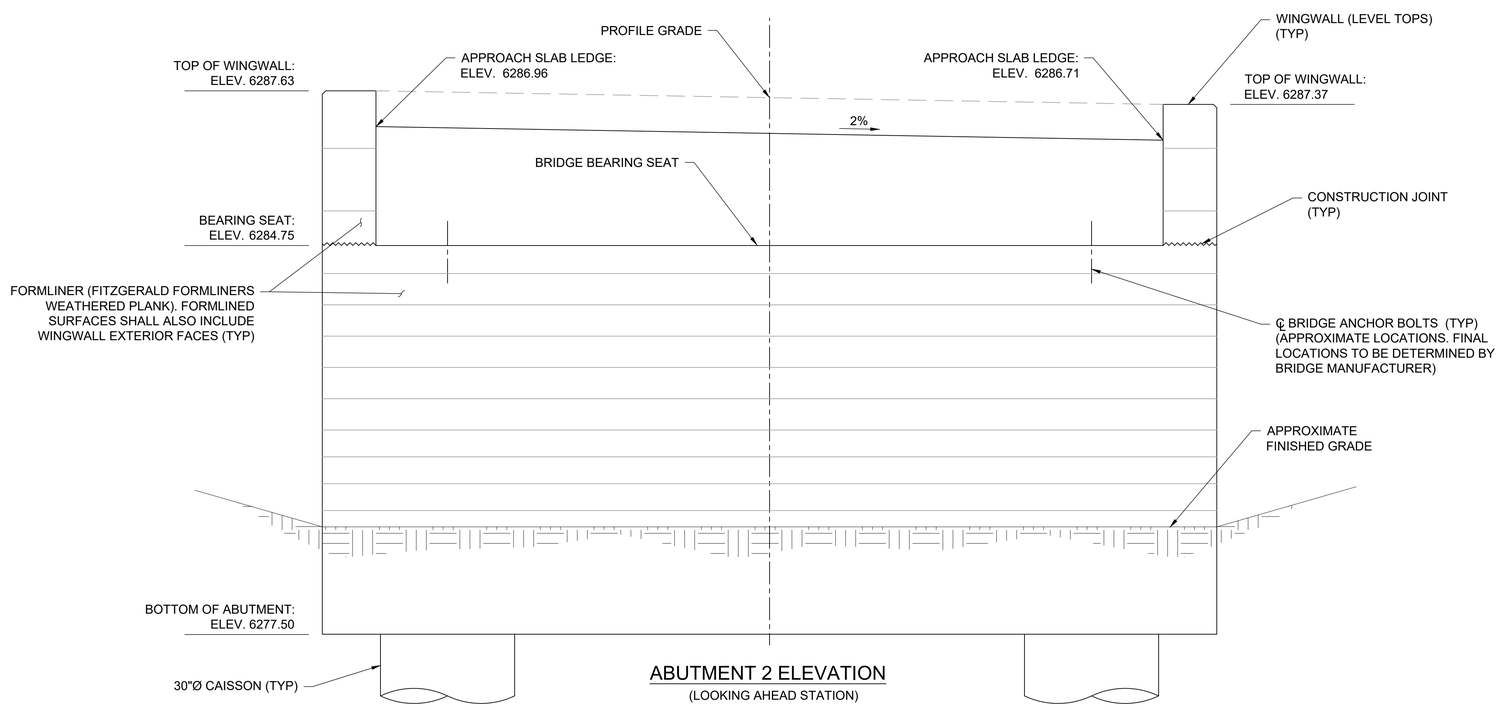

ABUTMENT 2 ELEVATION

(LOOKING AHEAD STATION)

ABUTMENT CONSTRUCTION NOTES:

1. ABUTMENT GEOMETRIES FOR PREFABRICATED TRUSS BRIDGES ARE DEPENDENT, THEREFORE IT IS CRITICAL THAT ALL DEPENDENT DIMENSIONS BE VERIFIED WITH THE BRIDGE MANUFACTURER'S APPROVED SHOP DRAWINGS PRIOR TO CONSTRUCTION OF ABUTMENTS AND SETTING OF BRIDGE. DEPENDING ON FABRICATION DETAILS, DIMENSIONS OF ABUTMENTS SHALL BE MODIFIED ACCORDINGLY. THESE DIMENSIONS INCLUDE:

- BEARING SEAT ASSEMBLY SIZES AND LAYOUT
- HEIGHT FROM BEARING SEAT TO TOP OF DECK
- BRIDGE END-TO-END LENGTH
- BRIDGE OUT-TO-OUT WIDTH AT BEARING SEAT
- DECK SLOPE AT BRIDGE ENDS DUE TO CAMBER

UNTIL SUCH TIME AS THESE DRAWINGS ARE APPROVED BY THE APPROPRIATE REVIEWING AGENCIES, JR ENGINEERING APPROVES THEIR USE ONLY FOR THE PURPOSES DESIGNATED BY WRITTEN AUTHORIZATION.

PREPARED FOR
RAMPART RANGE METRO DISTRICT
8390 E CRESCENT PKWY
SUITE 300
GREENWOOD VILLAGE, CO 80111
PHONE: 303-779-5710

San Engineering
Civil & Structural Engineering
1150 W. LITTLETON BLVD. #200
LITTLETON, CO 80120
303.953.9014 www.sanengineeringllc.com

No.	REVISION	BY	DATE

H-SCALE	
V-SCALE	
DATE	09/02/26
DESIGNED BY	KSP
DRAWN BY	KSP
CHECKED BY	JJM

HILLCAMP DRIVE

PEDESTRIAN BRIDGE OVER HILLCAMP DRIVE

ABUTMENT 2 PLAN & ELEVATION

COLORADO REGISTERED PROFESSIONAL ENGINEER
08/31/2026

SHEET 65 OF 80

JOB NO. 15950.18

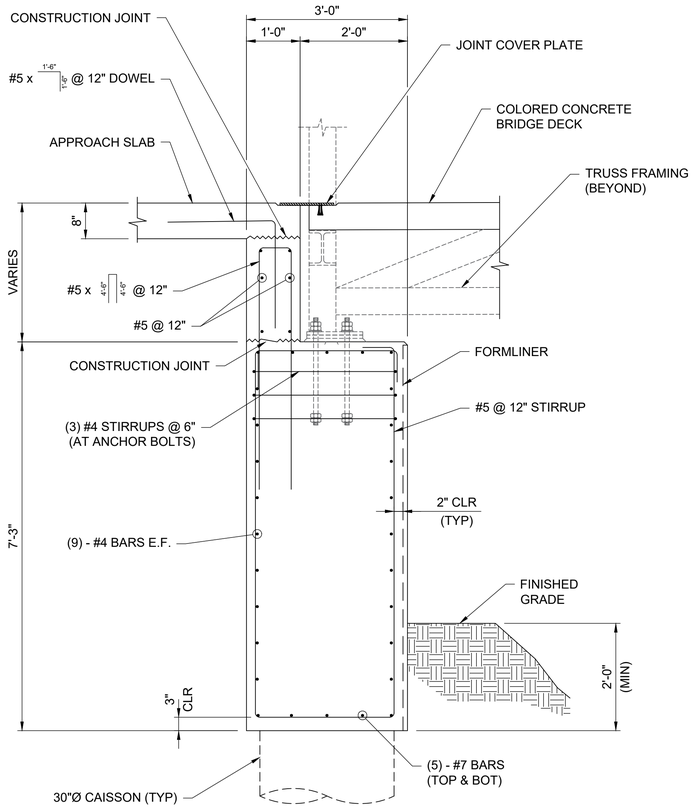

ABUTMENT REINFORCING SECTION

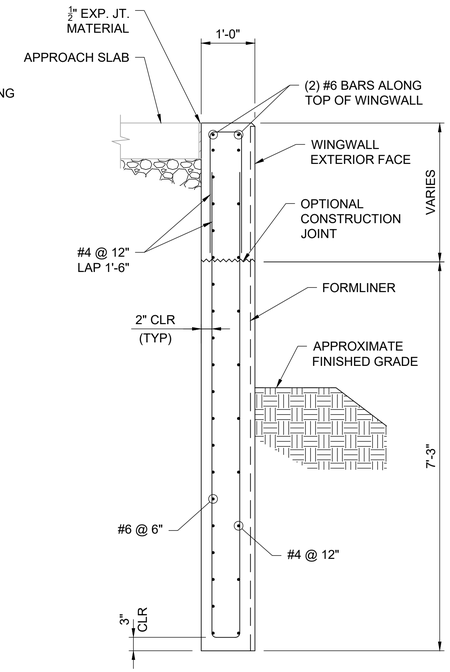

WINGWALL REINFORCING SECTION

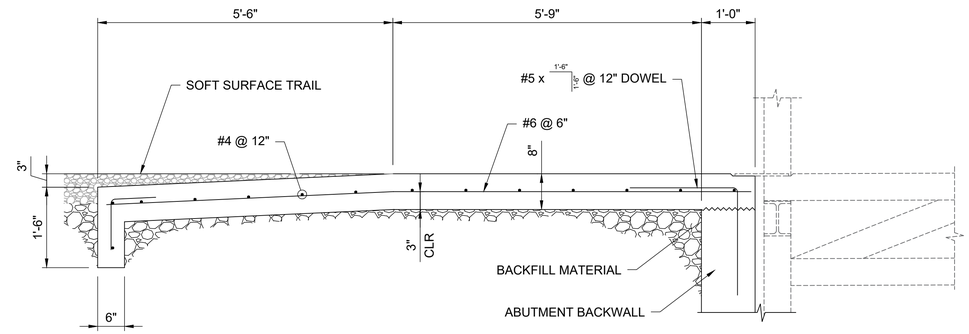

APPROACH SLAB REINFORCING SECTION

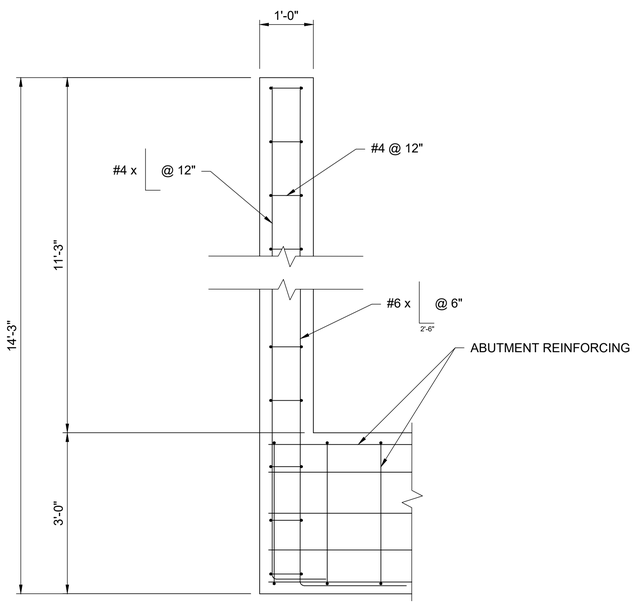

WINGWALL CONNECTION
(BELOW BEARING SEAT)

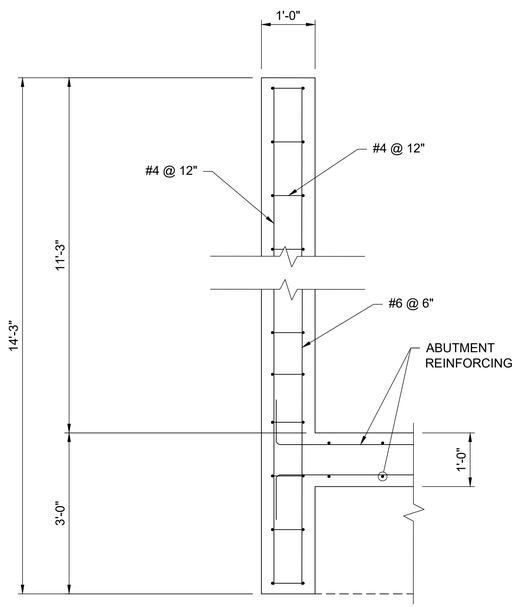

WINGWALL CONNECTION
(ABOVE BEARING SEAT)

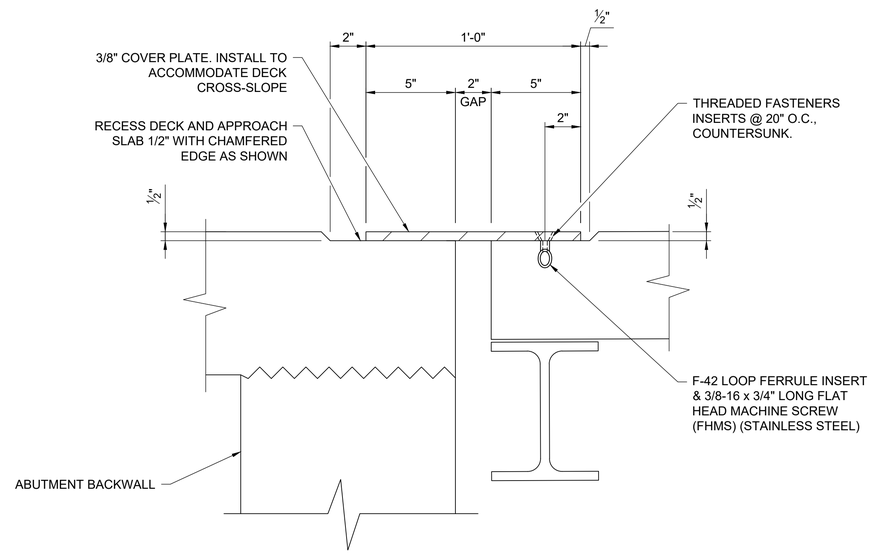

JOINT COVER PLATE DETAIL

COLORADO REGISTERED PROFESSIONAL ENGINEER
08/31/2026

UNTIL SUCH TIME AS THESE DRAWINGS ARE APPROVED BY THE APPROPRIATE REVIEWING AGENCIES, JR ENGINEERING APPROVES THEIR USE ONLY FOR THE PURPOSES DESIGNATED BY WRITTEN AUTHORIZATION.

PREPARED FOR
RAMPART RANGE METRO DISTRICT
8390 E CRESCENT PKWY
SUITE 300
GREENWOOD VILLAGE, CO 80111
PHONE: 303-779-5710

San Engineering
Civil & Structural Engineering
1150 W. LITTLETON BLVD. #200
LITTLETON, CO 80120
303.953.9014 www.sanengineeringllc.com

No.	REVISION	BY	DATE

H-SCALE	
V-SCALE	
DATE	09/02/26
DESIGNED BY	KSP
DRAWN BY	KSP
CHECKED BY	JJM

HILLCAMP DRIVE

PEDESTRIAN BRIDGE OVER HILLCAMP DRIVE

ABUTMENT DETAILS

SHEET 66 OF 80

JOB NO. 15950.18

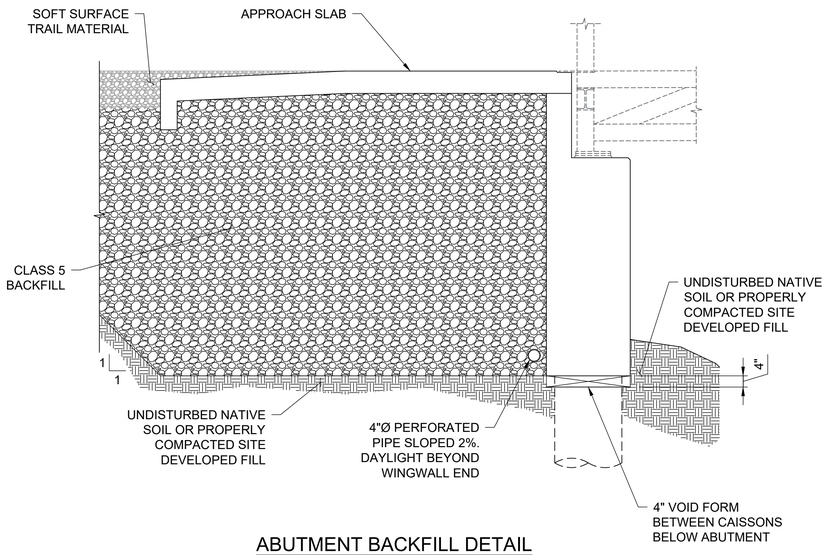

ABUTMENT BACKFILL DETAIL

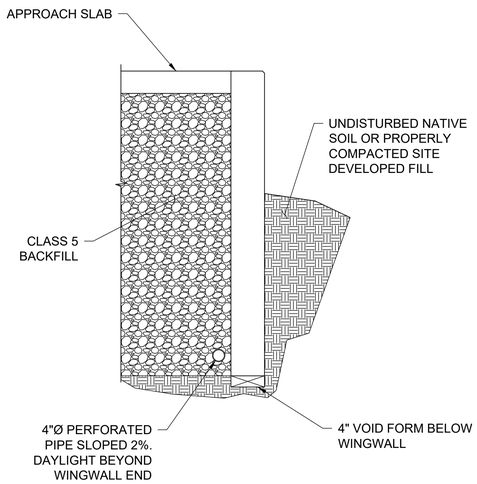

WINGWALL BACKFILL DETAIL

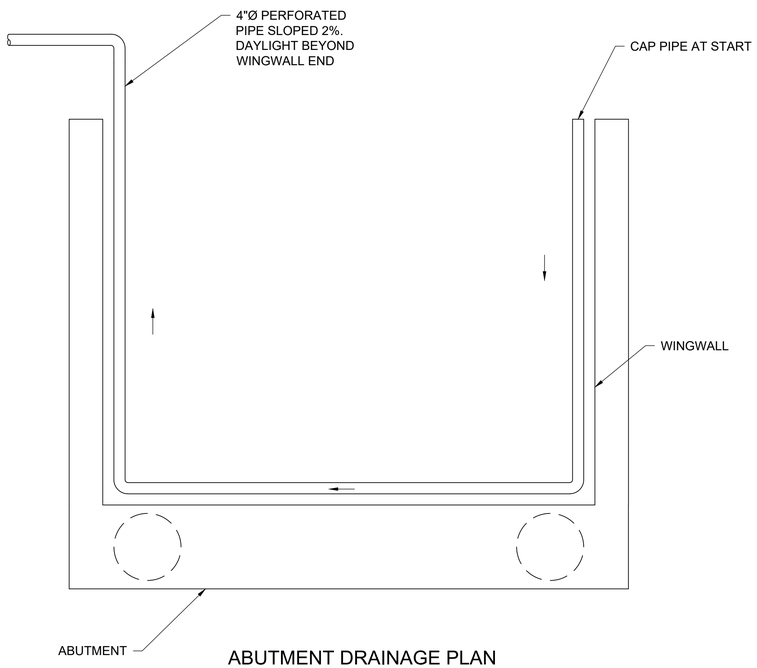

ABUTMENT DRAINAGE PLAN

(ABUTMENT 1 SHOWN, ABUTMENT 2 SIMILAR)

UNTIL SUCH TIME AS THESE DRAWINGS ARE APPROVED BY THE APPROPRIATE REVIEWING AGENCIES, JR ENGINEERING APPROVES THEIR USE ONLY FOR THE PURPOSES DESIGNATED BY WRITTEN AUTHORIZATION.

PREPARED FOR
RAMPART RANGE METRO DISTRICT
8390 E CRESCENT PKWY
SUITE 300
GREENWOOD VILLAGE, CO 80111
PHONE: 303-779-5710

San Engineering
Civil & Structural Engineering
1150 W. LITTLETON BLVD. #200
LITTLETON, CO 80120
303.953.9014 www.sanengineeringllc.com

No.	REVISION	BY	DATE

H-SCALE
V-SCALE
DATE 09/02/26
DESIGNED BY KSP
DRAWN BY KSP
CHECKED BY JJM

HILLCAMP DRIVE

PEDESTRIAN BRIDGE OVER HILLCAMP DRIVE

MISCELLANEOUS DETAILS

COLORADO REGISTERED PROFESSIONAL ENGINEER
08/31/2026

SHEET 67 OF 80

JOB NO. 15950.18

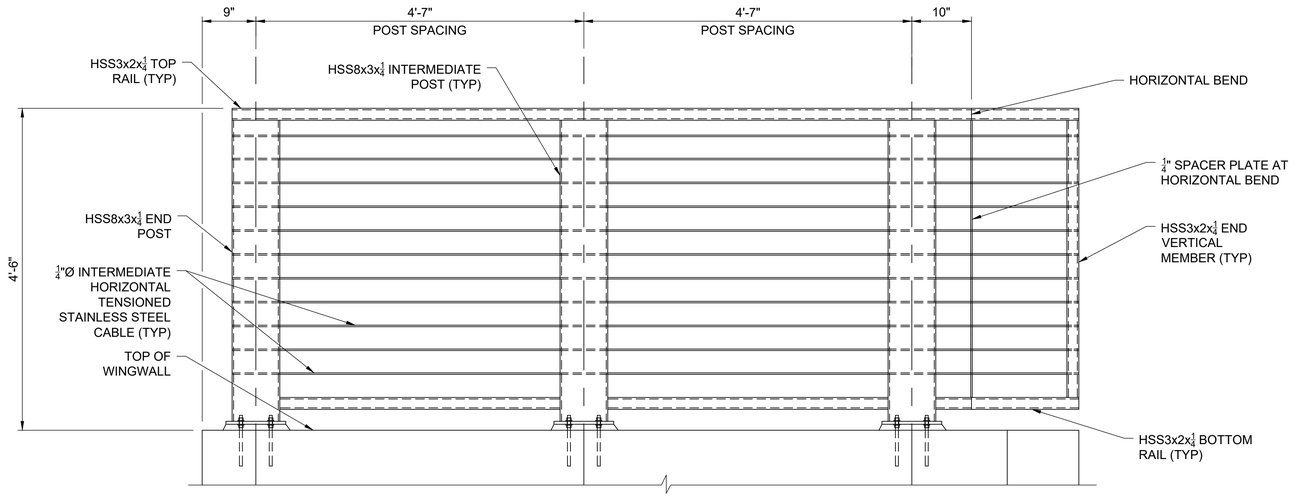

PEDESTRIAN RAIL ELEVATION

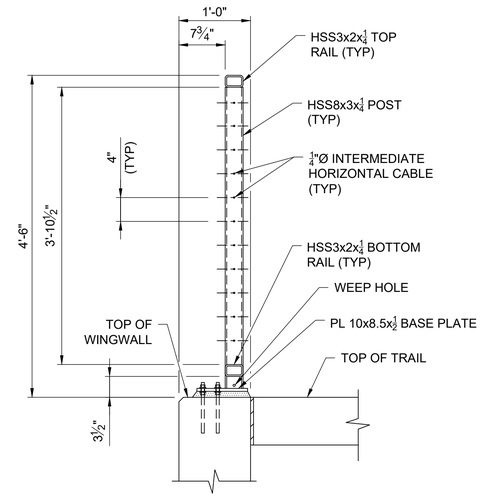

PEDESTRIAN RAIL SECTION

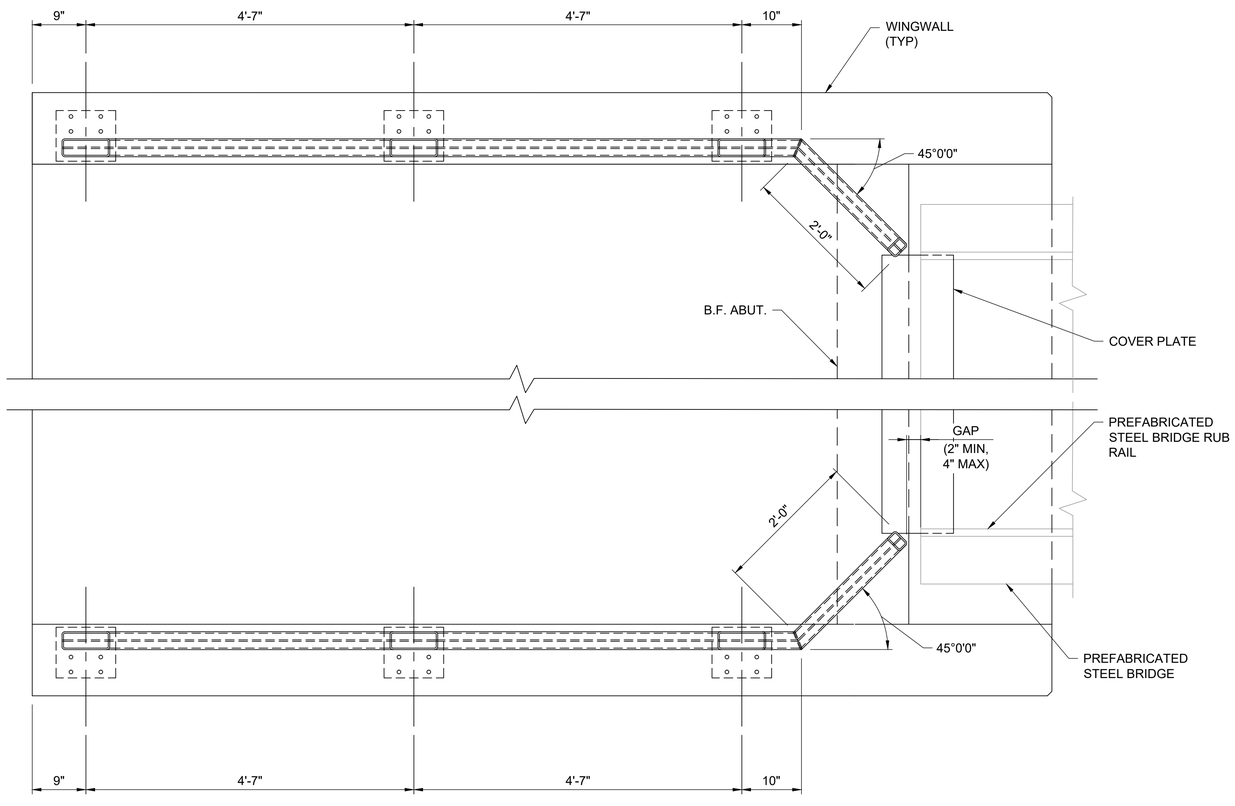

PEDESTRIAN RAIL PLAN

PEDESTRIAN RAIL NOTES:

1. ALL STRUCTURAL POST AND RAIL MEMBERS SHALL BE ASTM A-847, WEATHERING GRADE STEEL.
2. ALL OTHER STEEL SHALL BE ASTM A-36 UNLESS OTHERWISE NOTED.
3. POST-INSTALLED ANCHORS SHALL BE ALL-THREAD OF THE DIAMETER AND EMBEDMENTS SPECIFIED IN THESE DETAILS, AND EPOXIED WITH SIMPSON STRONG-TIE SET 3G OR APPROVED EQUAL.
4. EPOXY ADHESIVE SHALL BE MIXED, INSTALLED AND CURED IN STRICT ACCORDANCE WITH THE MANUFACTURER'S SPECIFICATIONS.
5. POST-INSTALLED ANCHORS SHALL BE STAINLESS STEEL.
6. TUBES, CHANNELS AND OTHER HORIZONTAL MEMBERS SHALL BE SHOP BENT OR FABRICATED TO FIT HORIZONTAL AND VERTICAL CURVES.
7. ALL VERTICAL SLOPES AND GRADES OF WALLS AND GROUND MAY NOT SHOWN FOR SIMPLICITY. PEDESTRIAN RAIL SHALL BE FABRICATED TO ACCOMMODATE THE HORIZONTAL AND VERTICAL SLOPE OF THE STRUCTURE. POSTS SHALL BE VERTICALLY PLUMB.
8. ALL WELDS SHALL BE GROUND SMOOTH.
9. ALL CLOSED TUBULAR MEMBERS SHALL HAVE 3/8" DIAMETER WEEP HOLES AT THEIR LOW END(S).
10. PRIOR TO FABRICATION, SHOP DRAWINGS SHALL BE SUBMITTED TO THE ENGINEER FOR APPROVAL. SHOP DRAWINGS SHALL INCLUDE LAYOUT AND GEOMETRY OF THE RAILS, AND SHALL INDICATE ALL MEMBER SIZES, CONNECTIONS, AND MATERIALS.
11. WINGWALL REINFORCING SHALL BE LOCATED USING GPRS AND MARKED PRIOR TO DRILLING OF ANCHOR BOLT HOLES. STIRRUPS MAY NOT BE COMPROMISED BY DRILLING ANCHOR HOLES.
12. TENSIONED CABLES SHALL BE PROVIDED AS A COMPLETE SYSTEM INCLUDING, BUT NOT LIMITED TO, TURNBUCKLES FOR TENSIONING, END TERMINALS, AND ANY ASSOCIATED HARDWARE.

UNTIL SUCH TIME AS THESE DRAWINGS ARE APPROVED BY THE APPROPRIATE REVIEWING AGENCIES, JR ENGINEERING APPROVES THEIR USE ONLY FOR THE PURPOSES DESIGNATED BY WRITTEN AUTHORIZATION.

PREPARED FOR
RAMPART RANGE METRO DISTRICT
8390 E CRESCENT PKWY
SUITE 300
GREENWOOD VILLAGE, CO 80111
PHONE: 303-779-5710

San Engineering
Civil & Structural Engineering
1150 W. LITTLETON BLVD. #200
LITTLETON, CO 80120
303.953.9014 www.sanengineeringllc.com

No.	REVISION	BY	DATE

H-SCALE	
V-SCALE	
DATE	09/02/26
DESIGNED BY	KSP
DRAWN BY	KSP
CHECKED BY	JJM

HILLCAMP DRIVE

PEDESTRIAN BRIDGE OVER HILLCAMP DRIVE

RAILING DETAILS (1 OF 2)

SHEET 68 OF 80

JOB NO. 15950.18

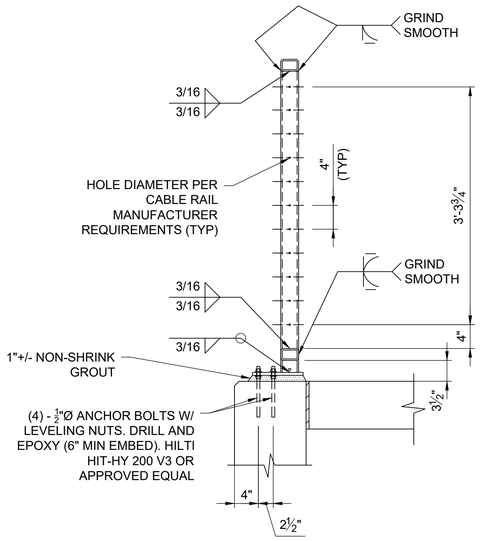

PEDESTRIAN RAIL CONNECTION DETAIL

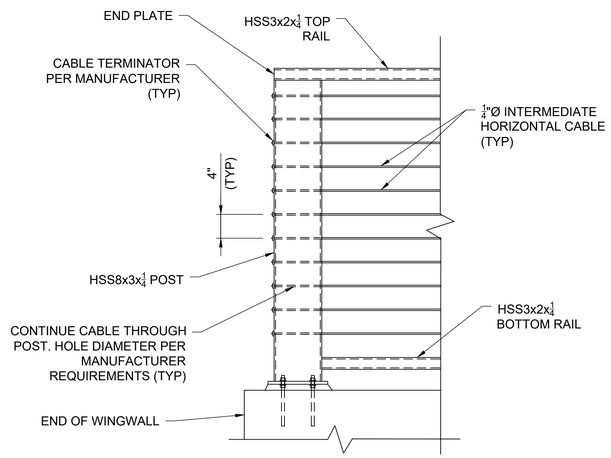

END POST DETAIL

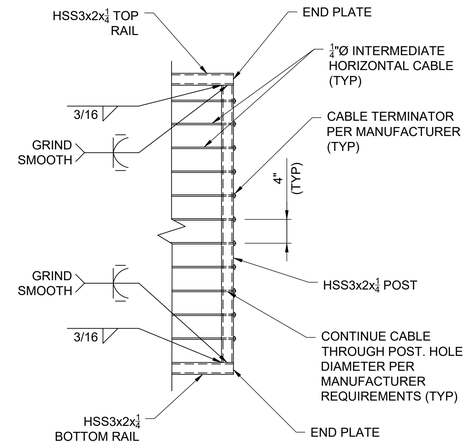

END VERTICAL MEMBER DETAIL

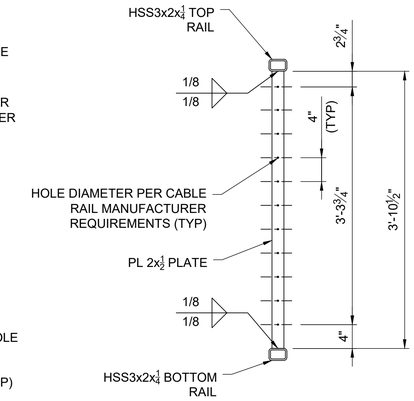

CABLE SPACER PLATE DETAIL

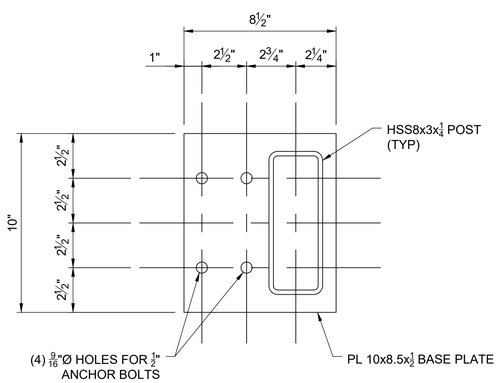

BASE PLATE DETAIL

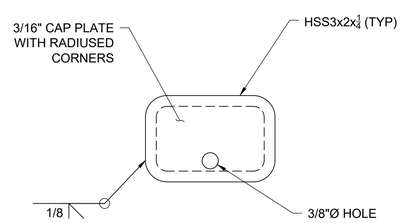

END PLATE DETAIL

UNTIL SUCH TIME AS THESE DRAWINGS ARE APPROVED BY THE APPROPRIATE REVIEWING AGENCIES, JR ENGINEERING APPROVES THEIR USE ONLY FOR THE PURPOSES DESIGNATED BY WRITTEN AUTHORIZATION.

PREPARED FOR
RAMPART RANGE METRO DISTRICT
8390 E CRESCENT PKWY
SUITE 300
GREENWOOD VILLAGE, CO 80111
PHONE: 303-779-5710

San Engineering
Civil & Structural Engineering
1150 W. LITTLETON BLVD. #200
LITTLETON, CO 80120
303.953.9014 www.sanengineeringllc.com

No.	REVISION	BY	DATE

H-SCALE	
V-SCALE	
DATE	09/02/26
DESIGNED BY	KSP
DRAWN BY	KSP
CHECKED BY	JJM

HILLCAMP DRIVE

PEDESTRIAN BRIDGE OVER HILLCAMP DRIVE

RAILING DETAILS (2 OF 2)

SHEET 69 OF 80

JOB NO. 15950.18

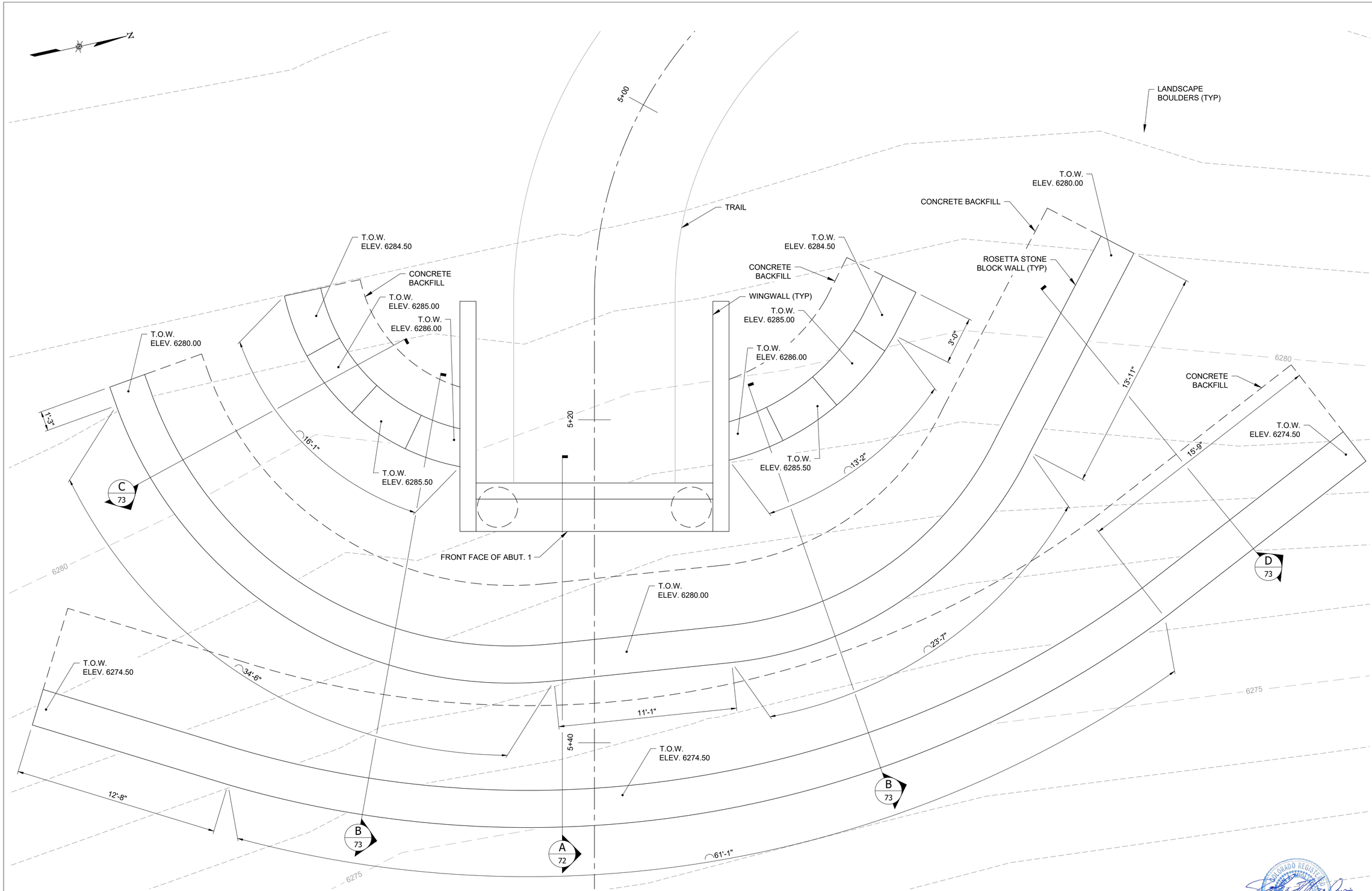

WEST WALL PLAN

NOTE:

1. LAYOUT AND ELEVATIONS BASED ON PROVIDED LANDSCAPE PLANS. PRIOR TO CONSTRUCTION, CONTRACTOR TO CONFIRM WALL LAYOUT AND ELEVATIONS WITH LATEST LANDSCAPE PLANS.

COLORADO REGISTERED PROFESSIONAL ENGINEER
08/31/2026

UNTIL SUCH TIME AS THESE DRAWINGS ARE APPROVED BY THE APPROPRIATE REVIEWING AGENCIES, JR ENGINEERING APPROVES THEIR USE ONLY FOR THE PURPOSES DESIGNATED BY WRITTEN AUTHORIZATION.

PREPARED FOR
RAMPART RANGE METRO DISTRICT
8390 E CRESCENT PKWY
SUITE 300
GREENWOOD VILLAGE, CO 80111
PHONE: 303-779-5710

San Engineering
Civil & Structural Engineering
1150 W. LITTLETON BLVD. #200
LITTLETON, CO 80120
303.953.9014 www.sanengineeringllc.com

No.	REVISION	BY	DATE

H-SCALE	
V-SCALE	
DATE	09/02/26
DESIGNED BY	KSP
DRAWN BY	KSP
CHECKED BY	JJM

HILLCAMP DRIVE

PEDESTRIAN BRIDGE OVER HILLCAMP DRIVE

WEST WALL LAYOUT PLAN

SHEET 70 OF 80

JOB NO. 15950.18

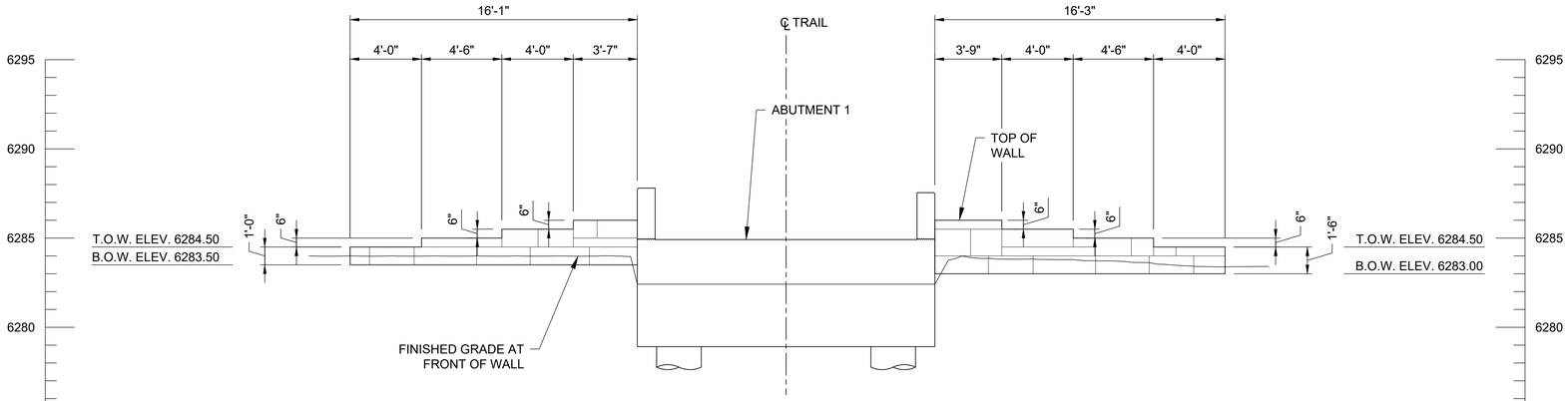

WEST WALL ELEVATION - UPPER WALL

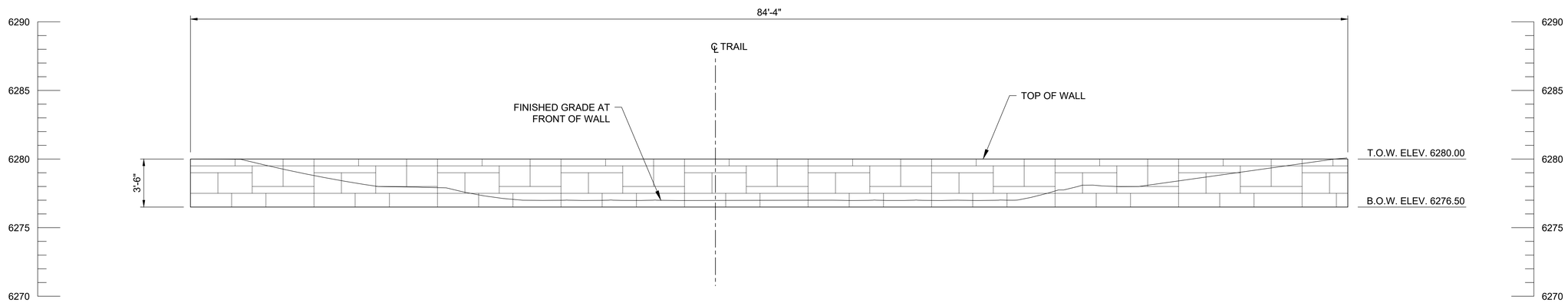

WEST WALL ELEVATION - MIDDLE WALL

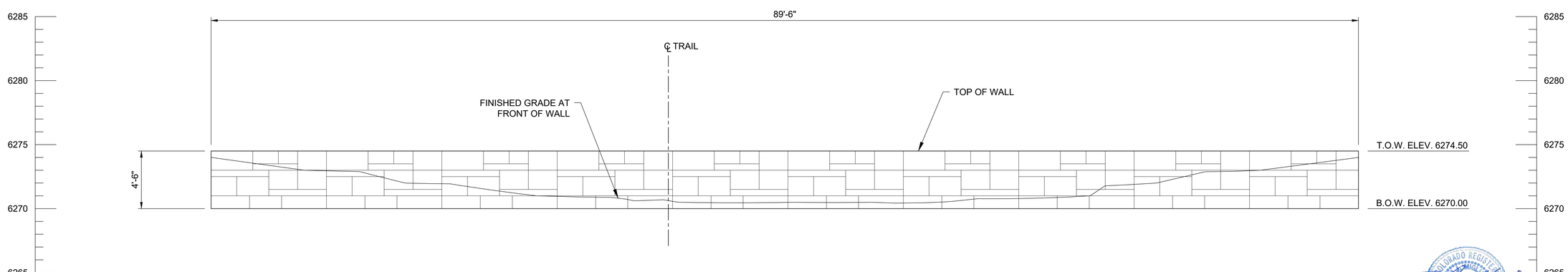

WEST WALL ELEVATION - LOWER WALL

COLORADO REGISTERED
JOHN MICHAEL JOHNSON
08/31/2026
PROFESSIONAL ENGINEER

NOTE:

1. LAYOUT AND ELEVATIONS BASED ON PROVIDED LANDSCAPE PLANS. PRIOR TO CONSTRUCTION, CONTRACTOR TO CONFIRM WALL LAYOUT AND ELEVATIONS WITH LATEST LANDSCAPE PLANS.

UNTIL SUCH TIME AS THESE DRAWINGS ARE APPROVED BY THE APPROPRIATE REVIEWING AGENCIES, JR ENGINEERING APPROVES THEIR USE ONLY FOR THE PURPOSES DESIGNATED BY WRITTEN AUTHORIZATION.

PREPARED FOR
RAMPART RANGE METRO DISTRICT
8390 E CRESCENT PKWY
SUITE 300
GREENWOOD VILLAGE, CO 80111
PHONE: 303-779-5710

San Engineering
Civil & Structural Engineering
1150 W. LITTLETON BLVD. #200
LITTLETON, CO 80120
303.953.9014 www.sanengineeringllc.com

No.	REVISION	BY	DATE

H-SCALE	
V-SCALE	
DATE	09/02/26
DESIGNED BY	KSP
DRAWN BY	KSP
CHECKED BY	JJM

HILLCAMP DRIVE

PEDESTRIAN BRIDGE OVER HILLCAMP DRIVE

WEST WALL ELEVATIONS

SHEET 71 OF 80

JOB NO. 15950.18

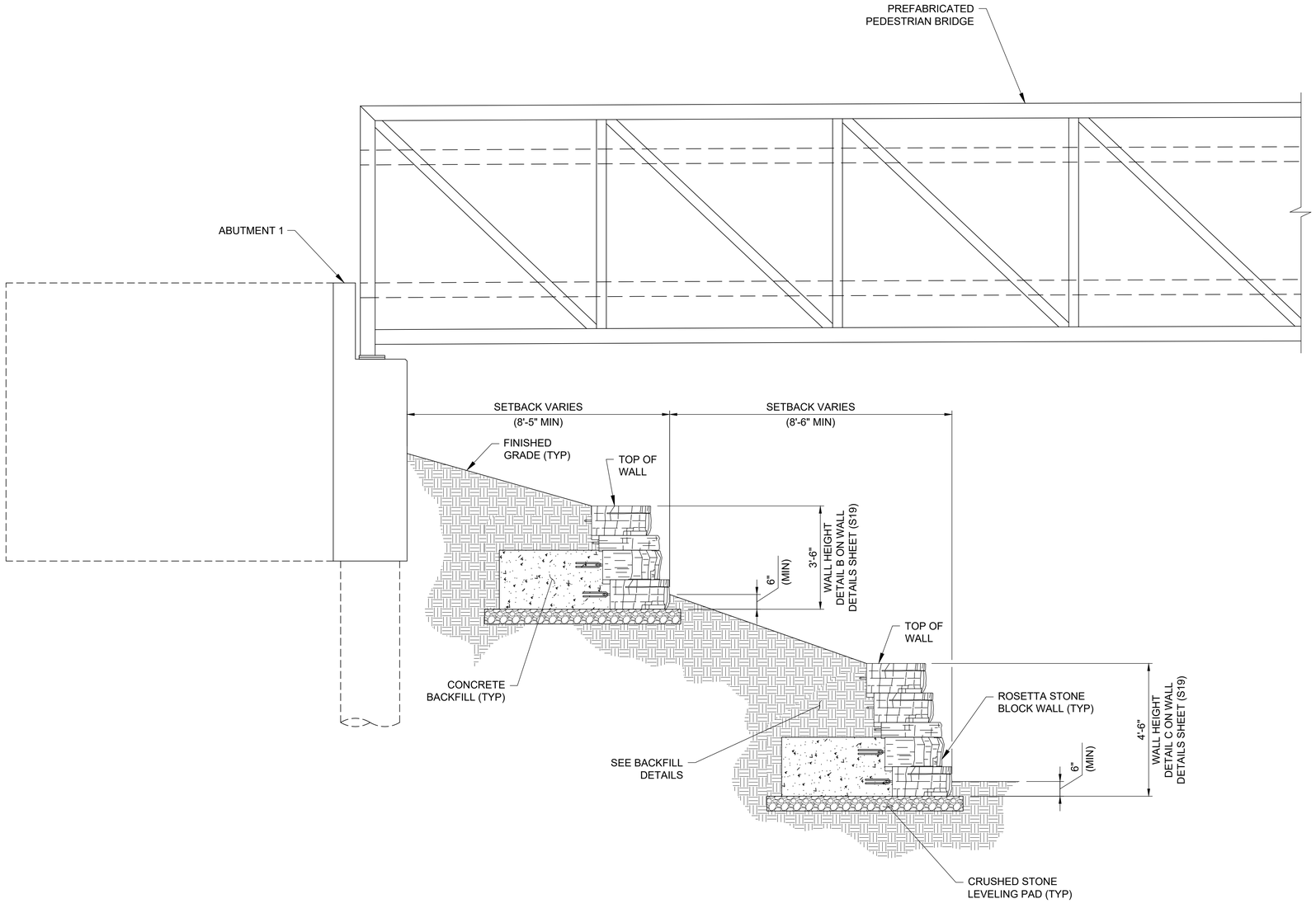

A
70
WEST WALL - AT ABUTMENT

NOTE:

1. LAYOUT AND ELEVATIONS BASED ON PROVIDED LANDSCAPE PLANS. PRIOR TO CONSTRUCTION, CONTRACTOR TO CONFIRM WALL LAYOUT AND ELEVATIONS WITH LATEST LANDSCAPE PLANS.

COLORADO REGISTERED PROFESSIONAL ENGINEER
08/31/2026

UNTIL SUCH TIME AS THESE DRAWINGS ARE APPROVED BY THE APPROPRIATE REVIEWING AGENCIES, JR ENGINEERING APPROVES THEIR USE ONLY FOR THE PURPOSES DESIGNATED BY WRITTEN AUTHORIZATION.

PREPARED FOR
RAMPART RANGE METRO DISTRICT
8390 E CRESCENT PKWY
SUITE 300
GREENWOOD VILLAGE, CO 80111
PHONE: 303-779-5710

San Engineering
Civil & Structural Engineering
1150 W. LITTLETON BLVD. #200
LITTLETON, CO 80120
303.953.9014 www.sanengineeringllc.com

No.	REVISION	BY	DATE

H-SCALE
V-SCALE
DATE 09/02/26
DESIGNED BY KSP
DRAWN BY KSP
CHECKED BY JJM

HILLCAMP DRIVE

PEDESTRIAN BRIDGE OVER HILLCAMP DRIVE

WEST WALL SECTIONS (1 OF 2)

SHEET 72 OF 80

JOB NO. 15950.18

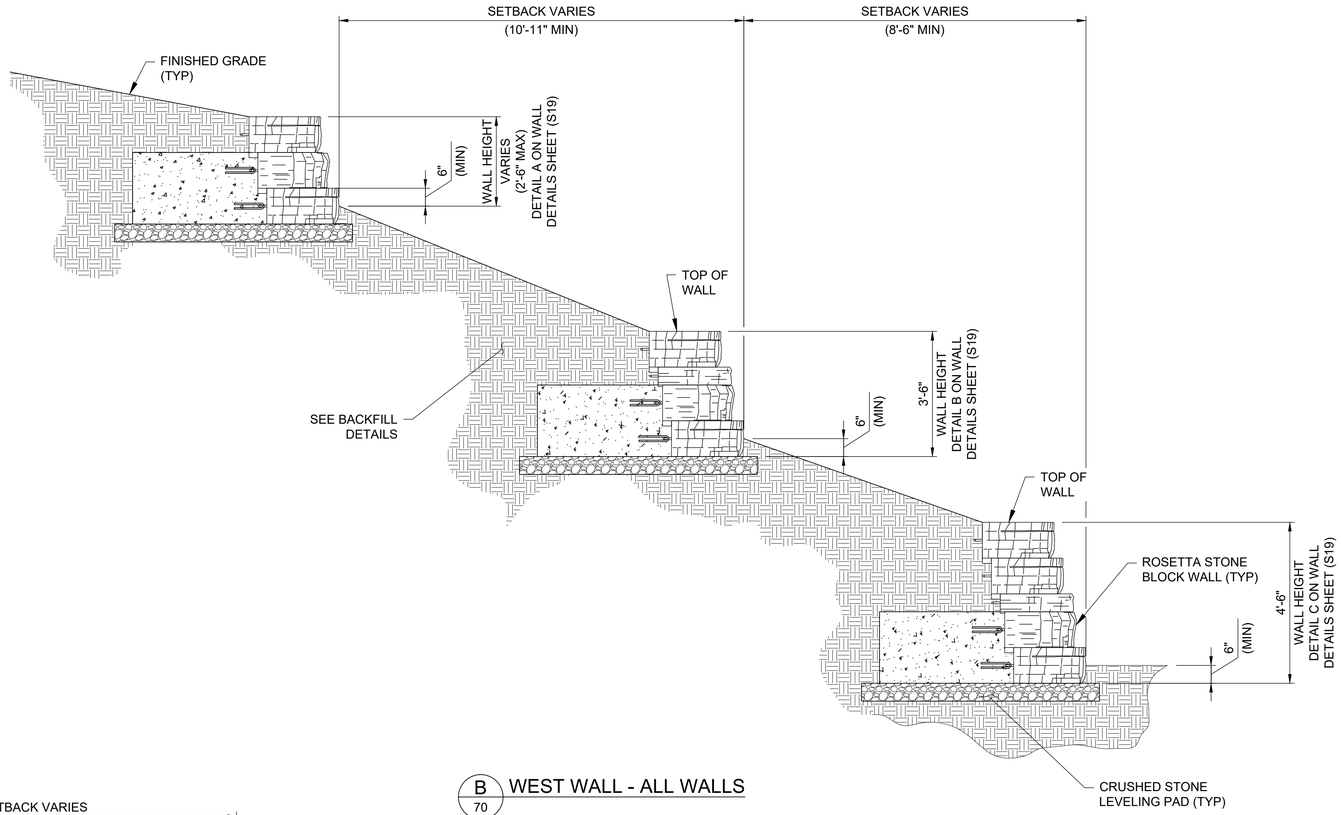

B 70 WEST WALL - ALL WALLS

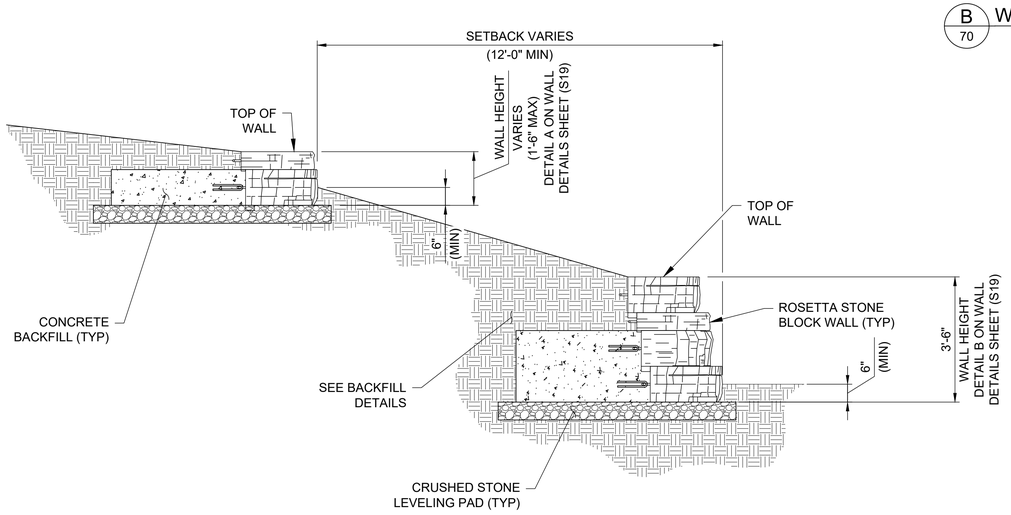

C 70 WEST WALL - UPPER AND MIDDLE WALLS

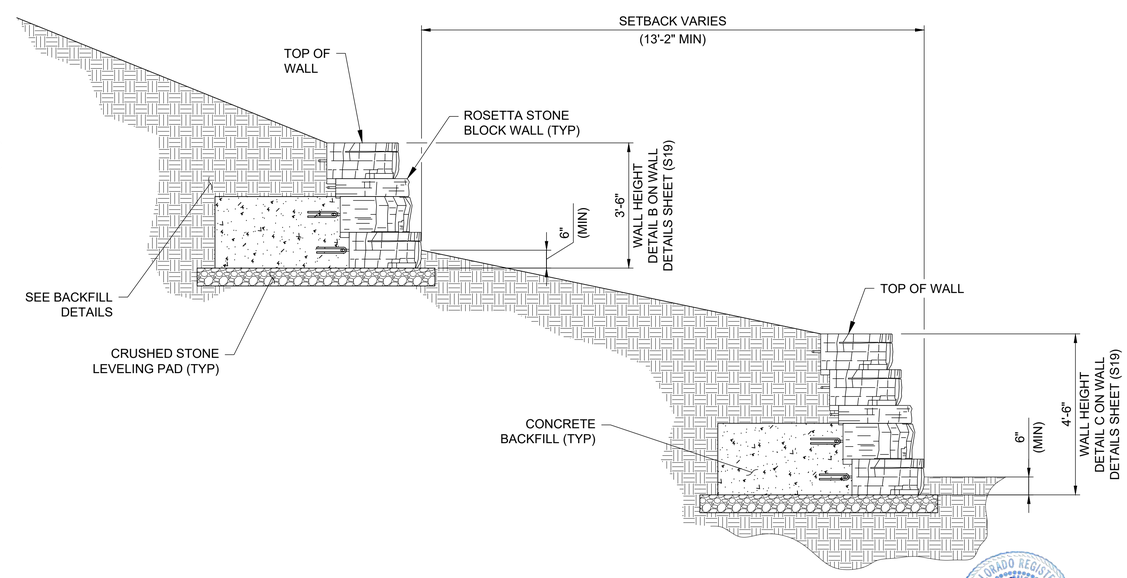

D 70 WEST WALL - MIDDLE AND LOWER WALLS

NOTE:

1. LAYOUT AND ELEVATIONS BASED ON PROVIDED LANDSCAPE PLANS. PRIOR TO CONSTRUCTION, CONTRACTOR TO CONFIRM WALL LAYOUT AND ELEVATIONS WITH LATEST LANDSCAPE PLANS.

COLORADO REGISTERED PROFESSIONAL ENGINEER
08/31/2026

UNTIL SUCH TIME AS THESE DRAWINGS ARE APPROVED BY THE APPROPRIATE REVIEWING AGENCIES, JR ENGINEERING APPROVES THEIR USE ONLY FOR THE PURPOSES DESIGNATED BY WRITTEN AUTHORIZATION.

PREPARED FOR
RAMPART RANGE METRO DISTRICT
8390 E CRESCENT PKWY
SUITE 300
GREENWOOD VILLAGE, CO 80111
PHONE: 303-779-5710

San Engineering
Civil & Structural Engineering
1150 W. LITTLETON BLVD. #200
LITTLETON, CO 80120
303.953.9014 www.sanengineeringllc.com

No.	REVISION	BY	DATE

H-SCALE	
V-SCALE	
DATE	09/02/26
DESIGNED BY	KSP
DRAWN BY	KSP
CHECKED BY	JJM

HILLCAMP DRIVE

PEDESTRIAN BRIDGE OVER HILLCAMP DRIVE

WEST WALL SECTIONS (2 OF 2)

SHEET 73 OF 80

JOB NO. 15950.18

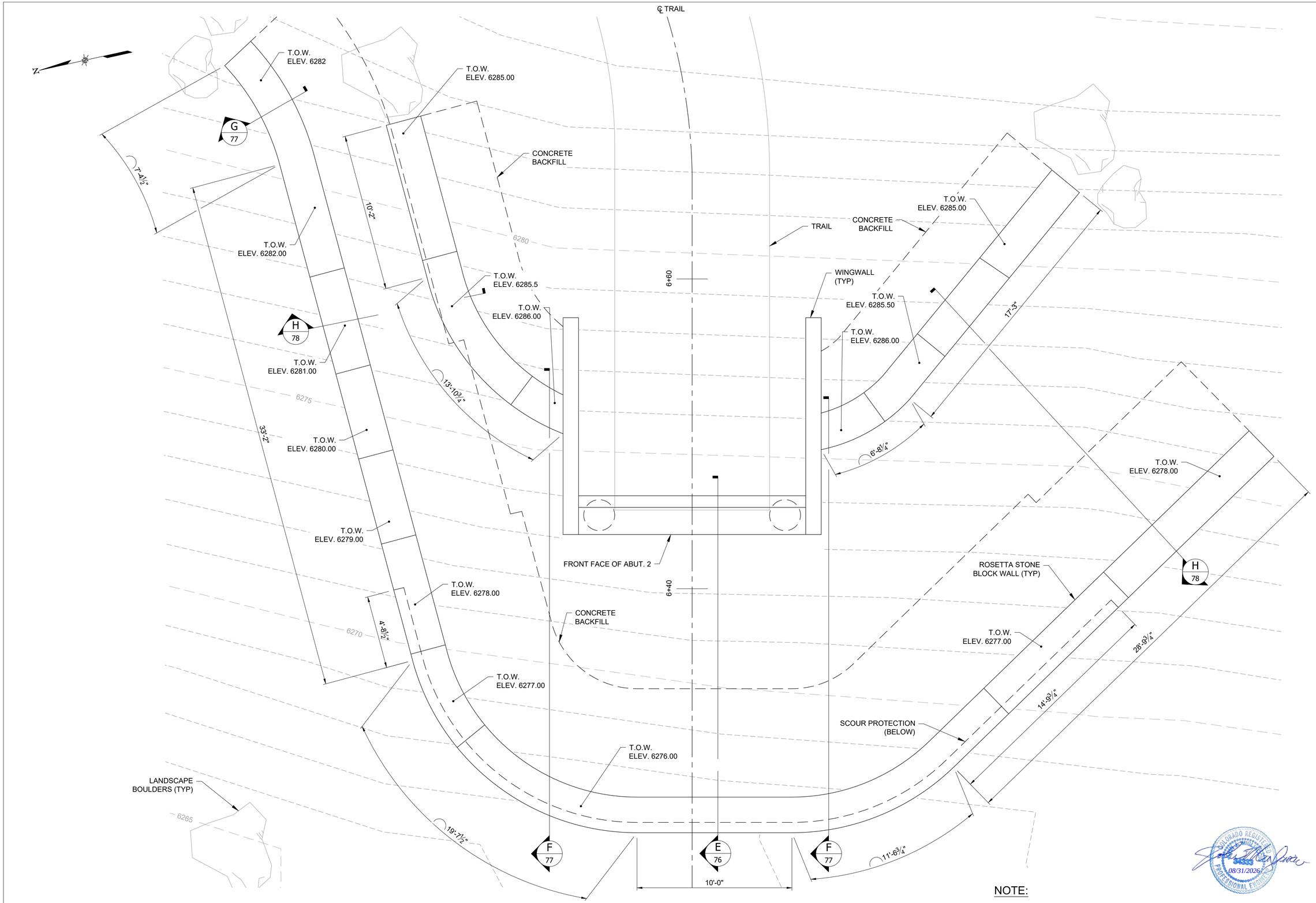

EAST WALL PLAN

NOTE:

1. LAYOUT AND ELEVATIONS BASED ON PROVIDED LANDSCAPE PLANS. PRIOR TO CONSTRUCTION, CONTRACTOR TO CONFIRM WALL LAYOUT AND ELEVATIONS WITH LATEST LANDSCAPE PLANS.

COLORADO REGISTERED PROFESSIONAL ENGINEER
08/31/2026

UNTIL SUCH TIME AS THESE DRAWINGS ARE APPROVED BY THE APPROPRIATE REVIEWING AGENCIES, JR ENGINEERING APPROVES THEIR USE ONLY FOR THE PURPOSES DESIGNATED BY WRITTEN AUTHORIZATION.

PREPARED FOR
RAMPART RANGE METRO DISTRICT
8390 E CRESCENT PKWY
SUITE 300
GREENWOOD VILLAGE, CO 80111
PHONE: 303-779-5710

San Engineering
Civil & Structural Engineering
1150 W. LITTLETON BLVD. #200
LITTLETON, CO 80120
303.953.9014 www.sanengineeringllc.com

No.	REVISION	BY	DATE

H-SCALE	
V-SCALE	
DATE	09/02/26
DESIGNED BY	KSP
DRAWN BY	KSP
CHECKED BY	JJM

HILLCAMP DRIVE

PEDESTRIAN BRIDGE OVER HILLCAMP DRIVE

EAST WALL LAYOUT PLAN

SHEET 74 OF 80

JOB NO. 15950.18

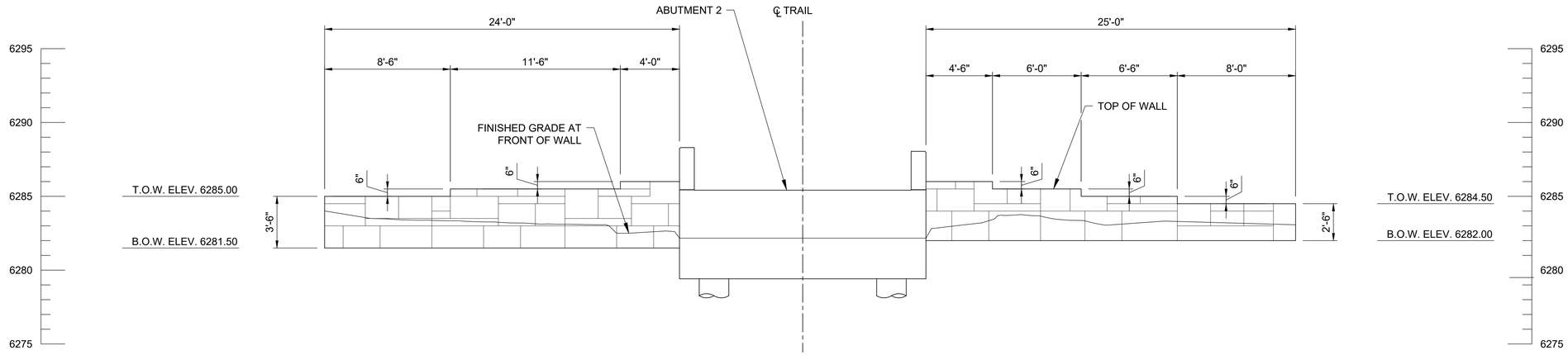

EAST WALL ELEVATION - UPPER WALL

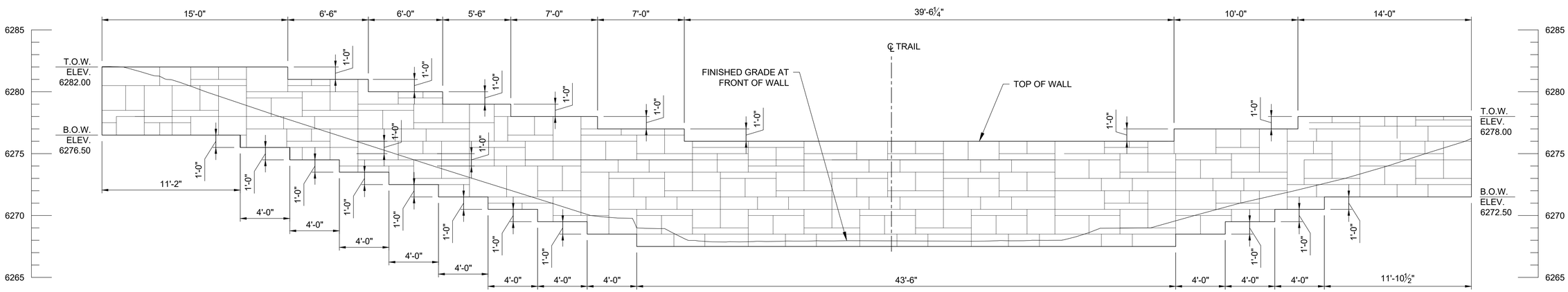

EAST WALL ELEVATION - LOWER WALL

NOTE:

1. LAYOUT AND ELEVATIONS BASED ON PROVIDED LANDSCAPE PLANS. PRIOR TO CONSTRUCTION, CONTRACTOR TO CONFIRM WALL LAYOUT AND ELEVATIONS WITH LATEST LANDSCAPE PLANS.

COLORADO REGISTERED PROFESSIONAL ENGINEER
08/31/2026

UNTIL SUCH TIME AS THESE DRAWINGS ARE APPROVED BY THE APPROPRIATE REVIEWING AGENCIES, JR ENGINEERING APPROVES THEIR USE ONLY FOR THE PURPOSES DESIGNATED BY WRITTEN AUTHORIZATION.

PREPARED FOR
RAMPART RANGE METRO DISTRICT
8390 E CRESCENT PKWY
SUITE 300
GREENWOOD VILLAGE, CO 80111
PHONE: 303-779-5710

San Engineering
Civil & Structural Engineering
1150 W. LITTLETON BLVD. #200
LITTLETON, CO 80120
303.953.9014 www.sanengineeringllc.com

No.	REVISION	BY	DATE

H-SCALE	
V-SCALE	
DATE	09/02/26
DESIGNED BY	KSP
DRAWN BY	KSP
CHECKED BY	JJM

HILLCAMP DRIVE

PEDESTRIAN BRIDGE OVER HILLCAMP DRIVE

EAST EALL ELEVATIONS

JOB NO. 15950.18

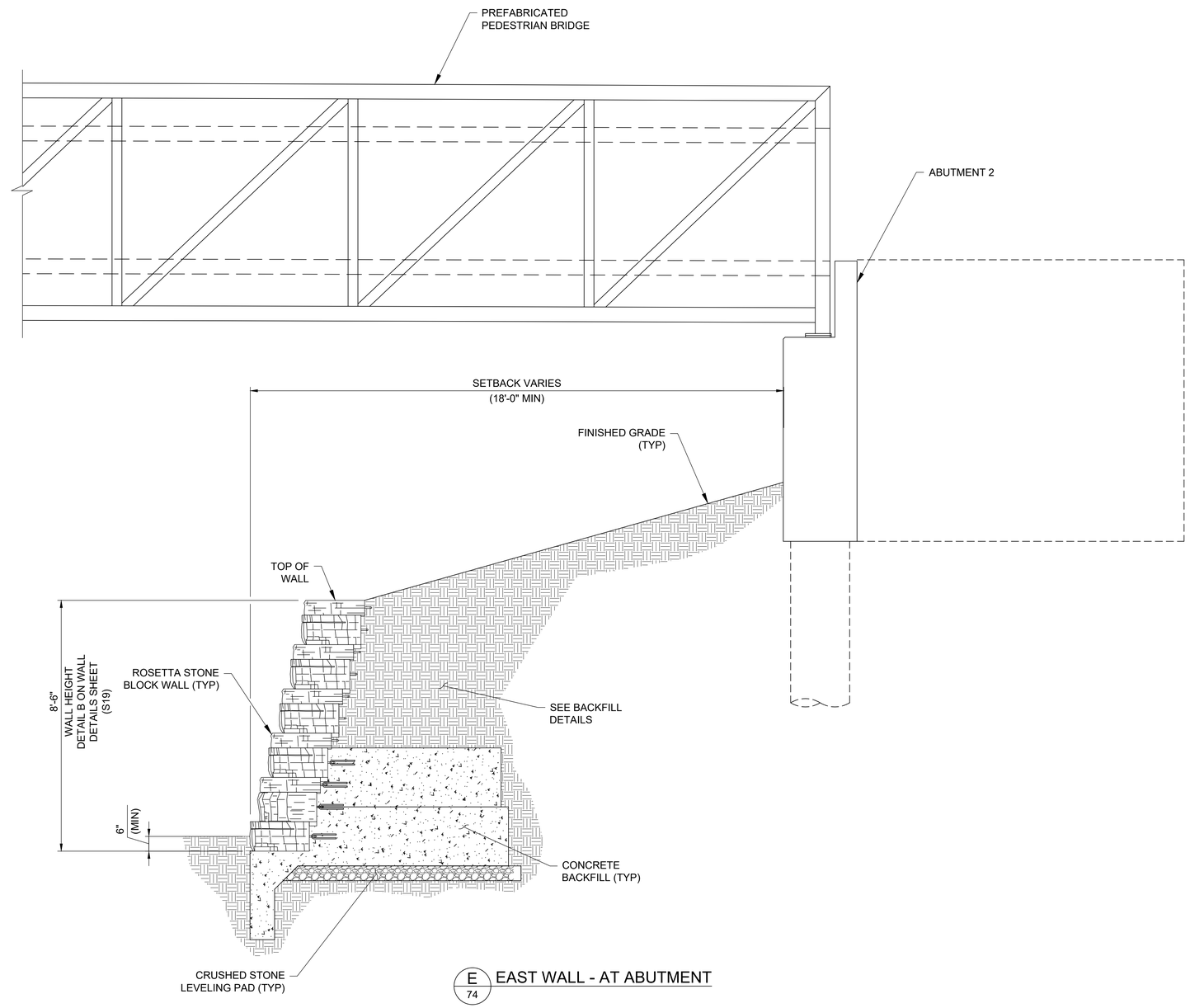

E
74
EAST WALL - AT ABUTMENT

NOTE:

1. LAYOUT AND ELEVATIONS BASED ON PROVIDED LANDSCAPE PLANS. PRIOR TO CONSTRUCTION, CONTRACTOR TO CONFIRM WALL LAYOUT AND ELEVATIONS WITH LATEST LANDSCAPE PLANS.

COLORADO REGISTERED PROFESSIONAL ENGINEER
08/31/2026

UNTIL SUCH TIME AS THESE DRAWINGS ARE APPROVED BY THE APPROPRIATE REVIEWING AGENCIES, JR ENGINEERING APPROVES THEIR USE ONLY FOR THE PURPOSES DESIGNATED BY WRITTEN AUTHORIZATION.

PREPARED FOR
RAMPART RANGE METRO DISTRICT
8390 E CRESCENT PKWY
SUITE 300
GREENWOOD VILLAGE, CO 80111
PHONE: 303-779-5710

San Engineering
Civil & Structural Engineering
1150 W. LITTLETON BLVD. #200
LITTLETON, CO 80120
303.953.9014 www.sanengineeringllc.com

No.	REVISION	BY	DATE

H-SCALE	
V-SCALE	
DATE	09/02/26
DESIGNED BY	KSP
DRAWN BY	KSP
CHECKED BY	JJM

HILLCAMP DRIVE

PEDESTRIAN BRIDGE OVER HILLCAMP DRIVE

EAST WALL SECTIONS (1 OF 3)

JOB NO. 15950.18

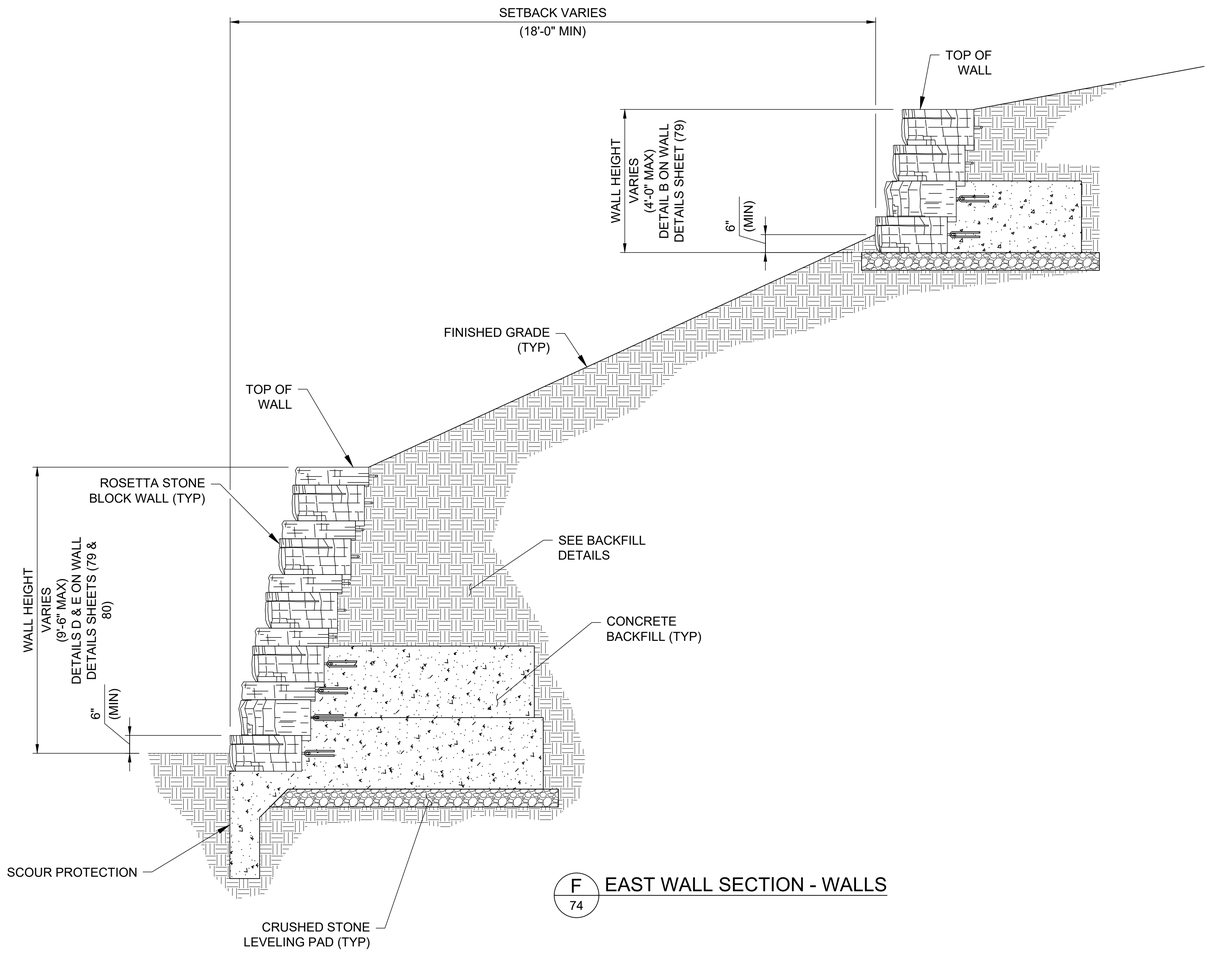

F
74
EAST WALL SECTION - WALLS

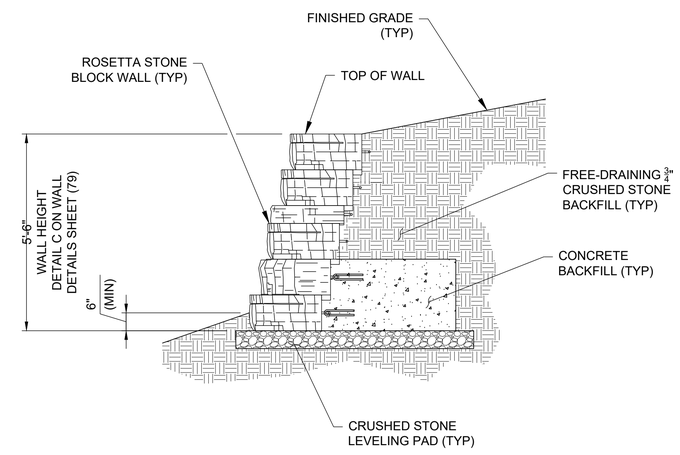

G
74
EAST WALL - SINGLE UPPER WALL

NOTE:

1. LAYOUT AND ELEVATIONS BASED ON PROVIDED LANDSCAPE PLANS. PRIOR TO CONSTRUCTION, CONTRACTOR TO CONFIRM WALL LAYOUT AND ELEVATIONS WITH LATEST LANDSCAPE PLANS.

UNTIL SUCH TIME AS THESE DRAWINGS ARE APPROVED BY THE APPROPRIATE REVIEWING AGENCIES, JR ENGINEERING APPROVES THEIR USE ONLY FOR THE PURPOSES DESIGNATED BY WRITTEN AUTHORIZATION.

PREPARED FOR
RAMPART RANGE METRO DISTRICT
8390 E CRESCENT PKWY
SUITE 300
GREENWOOD VILLAGE, CO 80111
PHONE: 303-779-5710

San Engineering
Civil & Structural Engineering
1150 W. LITTLETON BLVD. #200
LITTLETON, CO 80120
303.953.9014 www.sanengineeringllc.com

No.	REVISION	BY	DATE

H-SCALE	
V-SCALE	
DATE	09/02/26
DESIGNED BY	KSP
DRAWN BY	KSP
CHECKED BY	JJM

HILLCAMP DRIVE

PEDESTRIAN BRIDGE OVER HILLCAMP DRIVE

EAST WALL SECTIONS (2 OF 3)

SHEET 77 OF 80

JOB NO. 15950.18

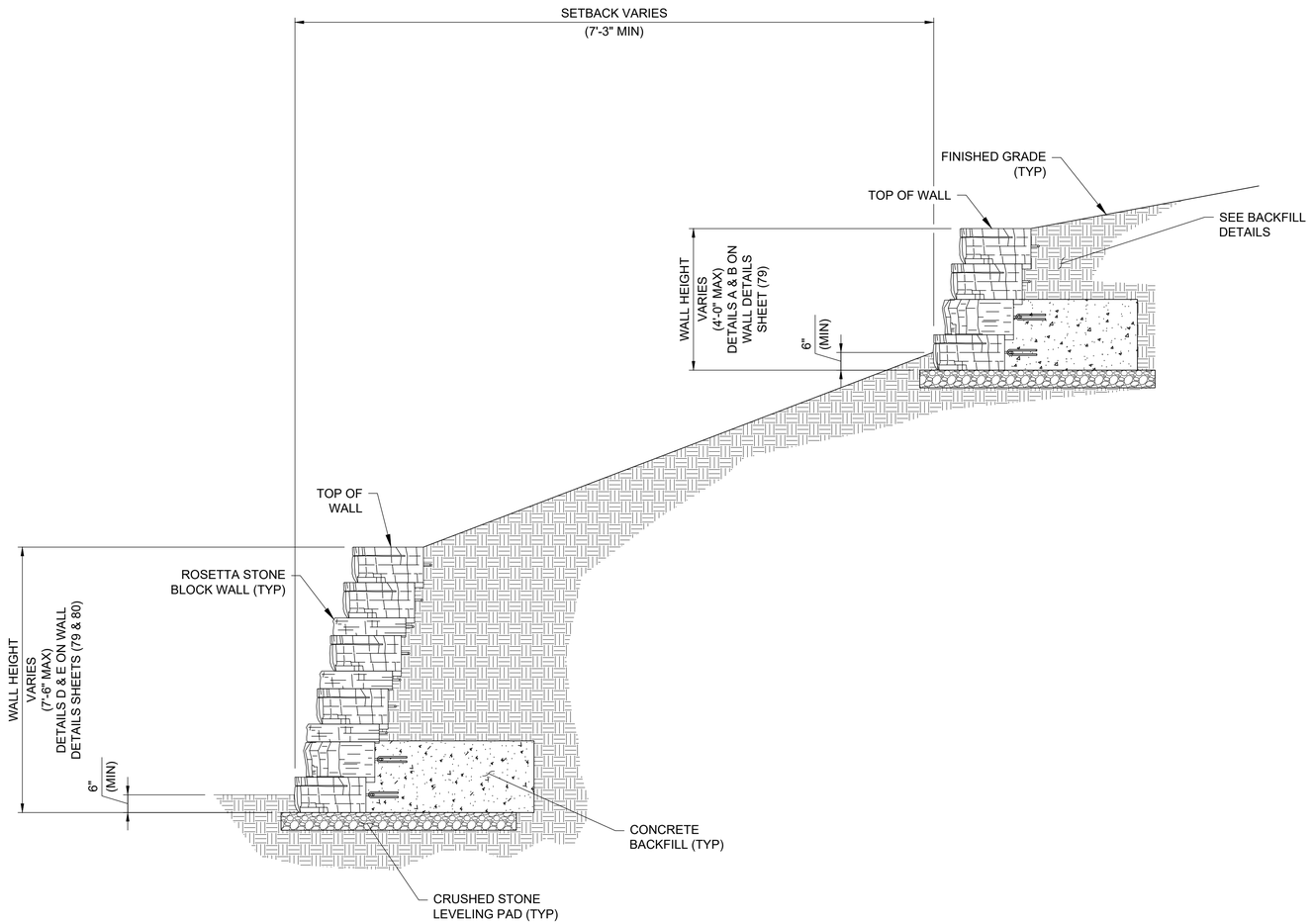

H
74
EAST WALL SECTION - WALLS

NOTE:

1. LAYOUT AND ELEVATIONS BASED ON PROVIDED LANDSCAPE PLANS. PRIOR TO CONSTRUCTION, CONTRACTOR TO CONFIRM WALL LAYOUT AND ELEVATIONS WITH LATEST LANDSCAPE PLANS.

COLORADO REGISTERED PROFESSIONAL ENGINEER
08/31/2026

UNTIL SUCH TIME AS THESE DRAWINGS ARE APPROVED BY THE APPROPRIATE REVIEWING AGENCIES, JR ENGINEERING APPROVES THEIR USE ONLY FOR THE PURPOSES DESIGNATED BY WRITTEN AUTHORIZATION.

PREPARED FOR
RAMPART RANGE METRO DISTRICT
8390 E CRESCENT PKWY
SUITE 300
GREENWOOD VILLAGE, CO 80111
PHONE: 303-779-5710

San Engineering
Civil & Structural Engineering
1150 W. LITTLETON BLVD. #200
LITTLETON, CO 80120
303.953.9014 www.sanengineeringllc.com

No.	REVISION	BY	DATE

H-SCALE
V-SCALE
DATE 09/02/26
DESIGNED BY KSP
DRAWN BY KSP
CHECKED BY JJM

HILLCAMP DRIVE

PEDESTRIAN BRIDGE OVER HILLCAMP DRIVE

EAST WALL SECTIONS (3 OF 3)

SHEET 78 OF 80

JOB NO. 15950.18

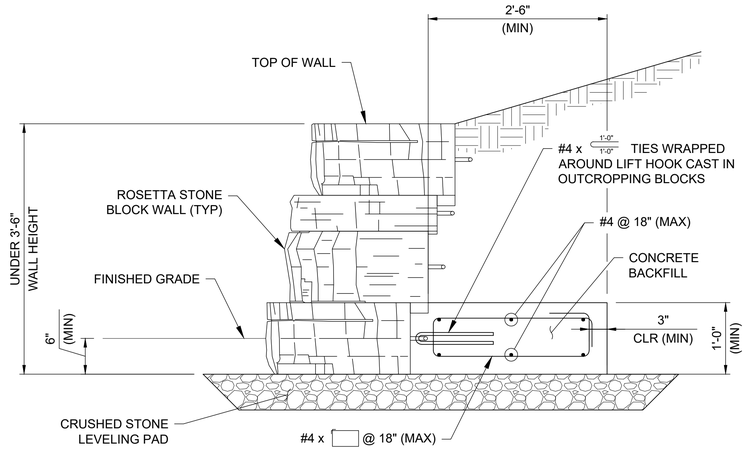

A CONCRETE BACKFILL DETAIL
(UNDER 3'-6" WALL HEIGHT)

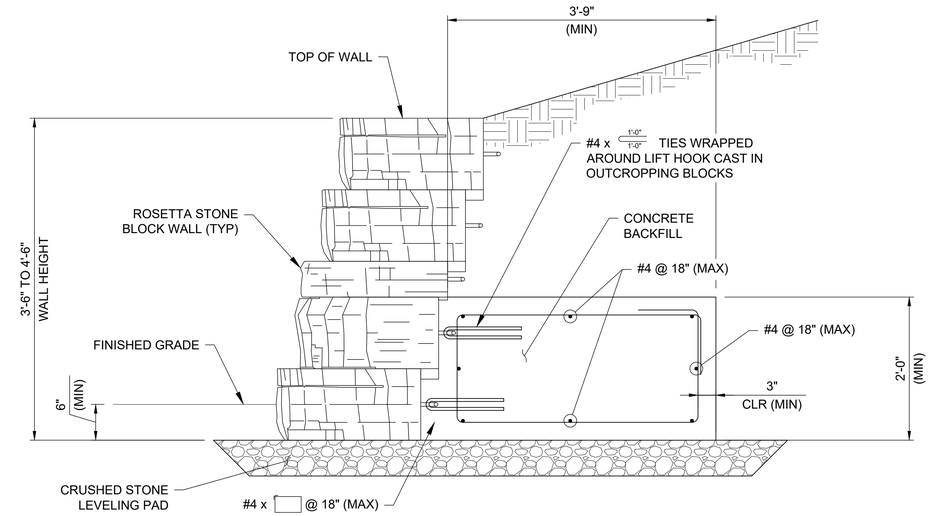

B CONCRETE BACKFILL DETAIL
(3'-6" TO 4'-6" WALL HEIGHT)

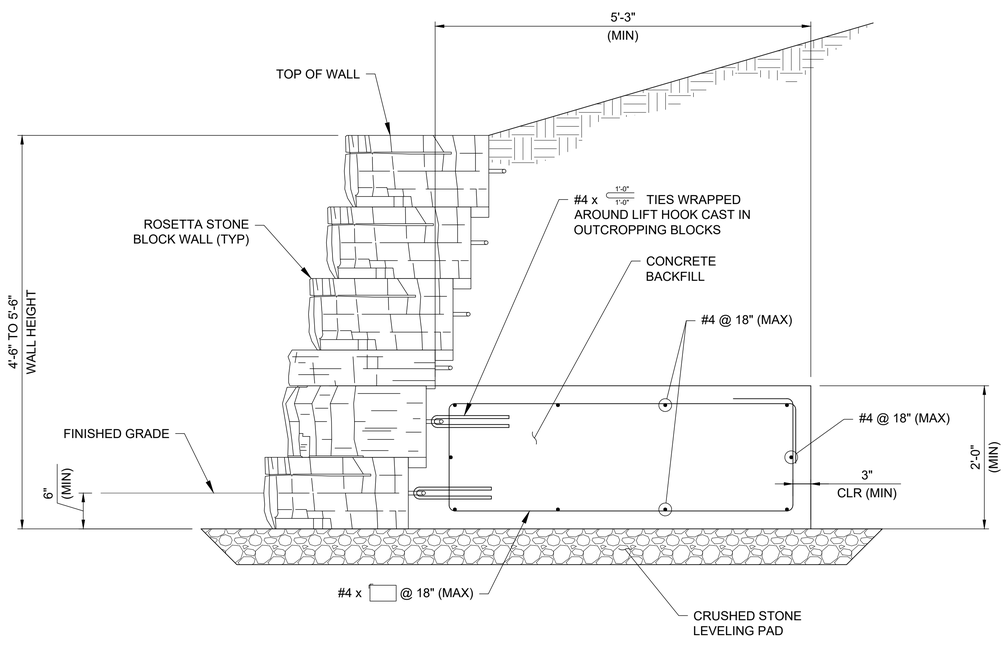

C CONCRETE BACKFILL DETAIL
(4'-6" TO 5'-6" WALL HEIGHT)

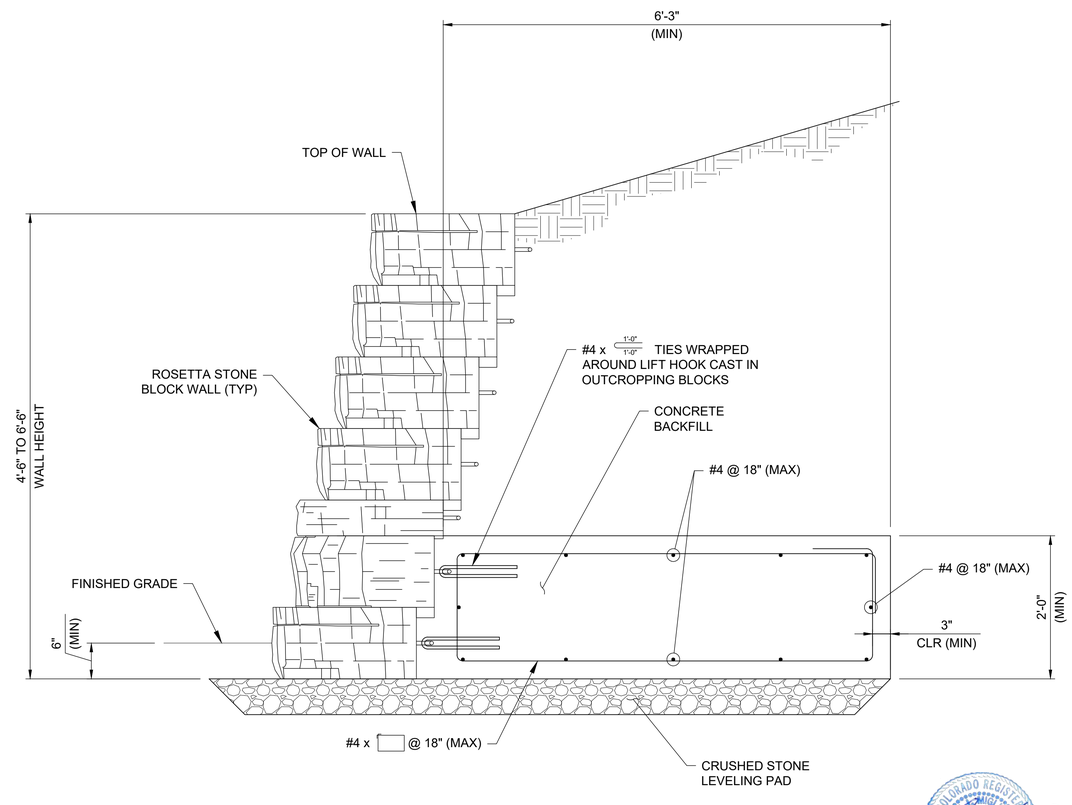

D CONCRETE BACKFILL DETAIL
(5'-6" TO 6'-6" WALL HEIGHT)

COLORADO REGISTERED PROFESSIONAL ENGINEER
08/31/2026

UNTIL SUCH TIME AS THESE DRAWINGS ARE APPROVED BY THE APPROPRIATE REVIEWING AGENCIES, JR ENGINEERING APPROVES THEIR USE ONLY FOR THE PURPOSES DESIGNATED BY WRITTEN AUTHORIZATION.

PREPARED FOR
RAMPART RANGE METRO DISTRICT
8390 E CRESCENT PKWY
SUITE 300
GREENWOOD VILLAGE, CO 80111
PHONE: 303-779-5710

San Engineering
Civil & Structural Engineering
1150 W. LITTLETON BLVD. #200
LITTLETON, CO 80120
303.953.9014 www.sanengineeringllc.com

No.	REVISION	BY	DATE

H-SCALE	
V-SCALE	
DATE	09/02/26
DESIGNED BY	KSP
DRAWN BY	KSP
CHECKED BY	JJM

HILLCAMP DRIVE

PEDESTRIAN BRIDGE OVER HILLCAMP DRIVE

WALL DETAILS (1 OF 2)

SHEET 79 OF 80

JOB NO. 15950.18

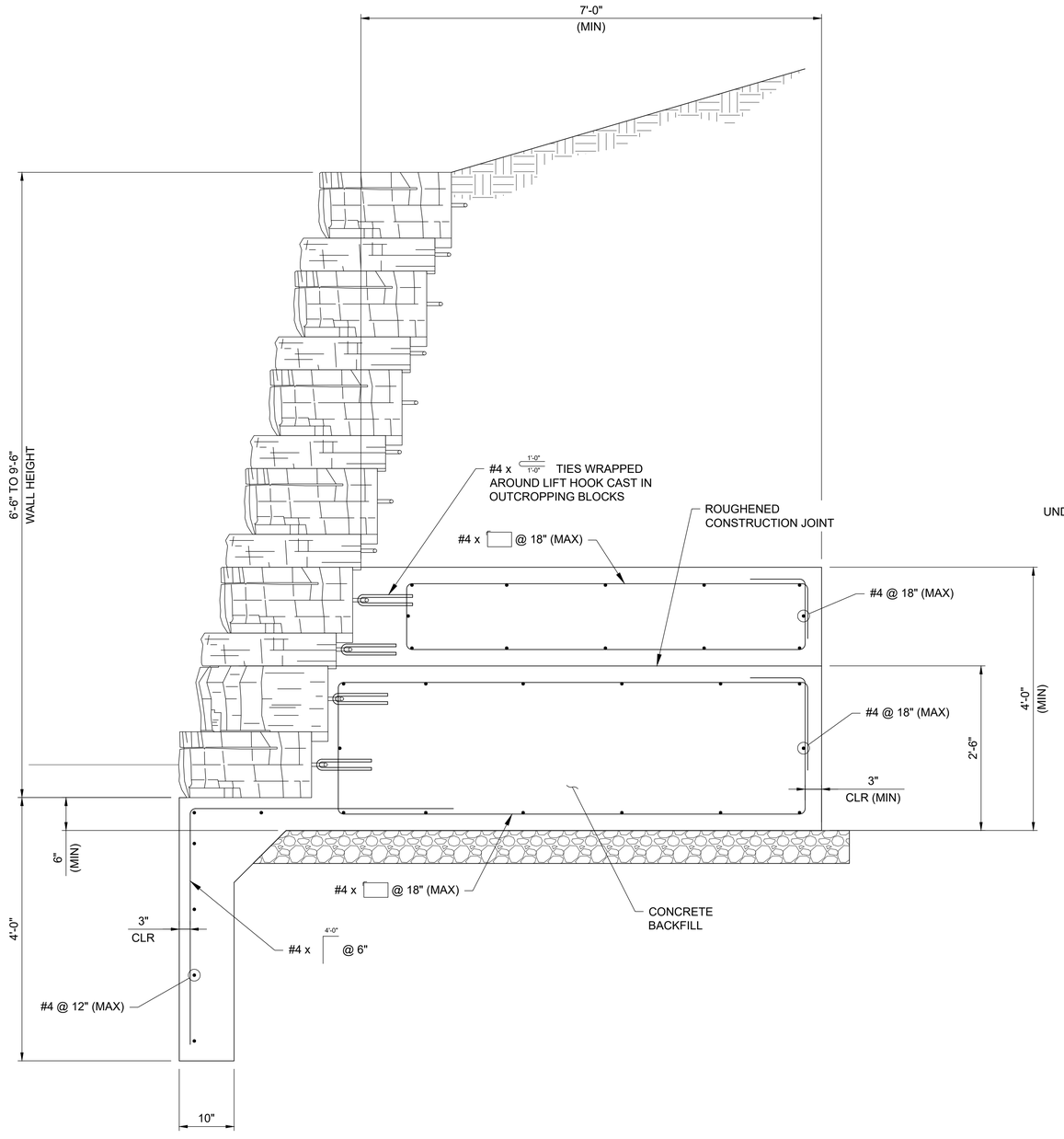

E CONCRETE BACKFILL DETAIL
(6'-6" TO 9'-6" WALL HEIGHT)

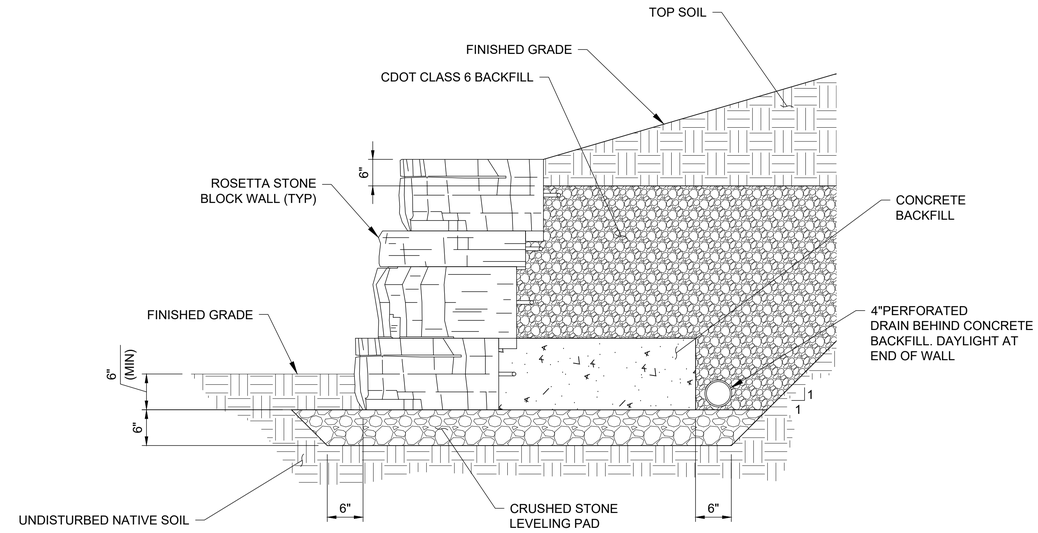

ROSETTA STONE WALL BACKFILL DETAIL

NOTES:

1. BLOCK WALLS TO BE INSTALLED PER MANUFACTURER'S REQUIREMENTS.
2. CONTRACTOR IS RESPONSIBLE FOR STABILITY OF STRUCTURE DURING ALL PHASES OF CONSTRUCTION.

COLORADO REGISTERED PROFESSIONAL ENGINEER
08/31/2026

UNTIL SUCH TIME AS THESE DRAWINGS ARE APPROVED BY THE APPROPRIATE REVIEWING AGENCIES, JR ENGINEERING APPROVES THEIR USE ONLY FOR THE PURPOSES DESIGNATED BY WRITTEN AUTHORIZATION.

PREPARED FOR
RAMPART RANGE METRO DISTRICT
8390 E CRESCENT PKWY
SUITE 300
GREENWOOD VILLAGE, CO 80111
PHONE: 303-779-5710

San Engineering
Civil & Structural Engineering
1150 W. LITTLETON BLVD. #200
LITTLETON, CO 80120
303.953.9014 www.sanengineeringllc.com

No.	REVISION	BY	DATE

H-SCALE	
V-SCALE	
DATE	09/02/26
DESIGNED BY	KSP
DRAWN BY	KSP
CHECKED BY	JJM

HILLCAMP DRIVE

PEDESTRIAN BRIDGE OVER HILLCAMP DRIVE

WALL DETAILS (2 OF 2)

SHEET 80 OF 80

JOB NO. 15950.18