Final Drainage Report

MURPHY USA FUEL STATION

9091 Westview Rd

PREPARED FOR:
Murphy USA
200 E Peach St
El Dorado, AR 71730

PREPARED BY:
Galloway & Company, LLC
5500 Greenwood Plaza Blvd., Suite 200
Greenwood Village, CO 80111
Tel: (303) 770-8884
Attn: Joe Park

DATE: August 4th, 2026



ENGINEER'S STATEMENT

I affirm that this report and plan for the Final drainage design for Murphy USA Fuel Station was prepared by me (or under my direct supervision) in accordance with the provisions of the Douglas County Strom Drainage Design and Technical Criteria Manual for the owners thereof. I understand that the Douglas County does not and will not assume liability for drainage facilities designed by others.

Joe Park, PE #42470
For and on behalf of Galloway & Company, LLC

Prepared By Selena Elekovic

DEVELOPER'S CERTIFICATION

"Murphy USA hereby certifies that the drainage facilities for Murphy USA Fuel Station shall be constructed according to the design presented in this report. I understand that the Douglas County does not and will not assume liability for the drainage facilities designed and/or certified by my engineer and that the Douglas County reviews drainage plans pursuant to the Municipal Code; but cannot, on behalf of Murphy USA Fuel Station, guarantee that final drainage design review will absolve Murphy USA and/or their successors and/or assigns of future liability for improper design."

Authorized Signature
Murphy USA

Date

Table of Contents

I. INTRODUCTION 3
LOCATION 3
DESCRIPTION OF PROPERTY 3
PROPOSED DEVELOPMENT 3
DRAINAGE STUDIES RELEVANT TO THE SITE 3
II. HISTORIC DRAINAGE 4
OVERALL BASIN DESCRIPTION 4
SUB-BASIN DESCRIPTION 4
III. DESIGN CRITERIA 5
REGULATION 5
HYDROLOGIC CRITERIA 5
HYDRAULIC CRITERIA 6
IV. FOUR STEP PROCESS 7
V. DRAINAGE PLAN 7
GENERAL CONCEPT 7
SPECIFIC DETAILS 7
STORMWATER CONVEYANCE FACILITIES 8
VI. CONCLUSIONS 8
COMPLIANCE WITH STANDARDS 8
VARIANCES 9
VII. REFERENCES 9

Appendices:

A. Exhibits and Figures
B. Excerpts From Previous Reports
C. Hydrologic Calculations
D. Hydraulic Calculations
E. Hydrodynamic Separator
F. Drainage Map

I. INTRODUCTION

LOCATION

Murphy USA Fuel Station – referred to herein as "site" or "project site" – is located at the southwest corner of E County Line Rd and Parkland Rd at 9091 Westview Rd in Lone Tree, Colorado. The project is located in the Lot 2 of Section 03, Township 6 South, Range 67 West of the 6th P.M., City of Lone Tree, County of Douglas, State of Colorado. The site consists of an existing commercial development. The site is bound by E County Line Rd right-of-way to the north, Parkland RD right-of-way to the east, Westview Rd to the south, and a commercial development to the west. A vicinity map is included in Appendix A for reference.

DESCRIPTION OF PROPERTY

The project site covers 0.97 acres. It is currently zoned PD (Planned Development). The area of disturbance is estimated to be approximately 0.89 acres. The site is currently developed with slopes ranging from 0.5% to 3%. Some areas on the perimeter of the site consist of steeper hills with slopes up to 25%. Existing ground cover consists of buildings and paved areas with some landscape. The existing site imperviousness is 77%.

According to the USDA Natural Resources Conservation Service (NRCS) Web Soil Survey for Douglas County, the site contains soil type Renohill-Buick complex (RmE), and is hydrologic soil group D. Group D soils have a very slow infiltration rate (high runoff potential) when thoroughly wet. These consist chiefly of clays that have a high shrink-swell potential, soils that have a high water table, soils that have a claypan or clay layer at or near the surface, and soils that are shallow over nearly impervious materials. These soils have a very slow rate of water transmission. Refer to Appendix A for soil survey information.

The project site is not impacted by a FEMA designated floodplain (refer to Appendix A for FEMA FIRMette map).

According to the Geotechnical Report the site consists of sand and clay layers with low to moderate swell potential and low collapsible potential. Groundwater was encountered between about 18 feet below existing grade at one location. Groundwater is not anticipated to impact the proposed buildings or stormwater facilities.

PROPOSED DEVELOPMENT

Proposed improvements include a convenience store and fuel canopy, underground fuel storage tanks, concrete parking lot and drive isles, landscaping, sidewalks, signage, and trash enclosure, utility infrastructure, and landscaping. Landscaping will consist of stone mulch, seeded areas, shrubs, trees, and sod areas consistent with commercial. The development will be served by one right in only access point from Parkland Rd and one full movement access point from Westview Rd.

DRAINAGE STUDIES RELEVANT TO THE SITE

The main drainage study applicable to the site is Phase III Drainage Report for Park Meadows prepared by Paller-Roberts Engineering in February of 1995 and revised in April of 1996. The objective of the study was to provide a basis of design for the regional infrastructure and detention facilities for Park Meadows.

II. HISTORIC DRAINAGE

OVERALL BASIN DESCRIPTION

On site flows generally flow south and southwest, towards existing inlets. These inlets are a part of the Park Meadows development drainage system that outflows into an existing detention pond, and ultimately into Willow Creek Watershed. Reference Appendix B for excerpts from Park Meadows drainage report.

SUB-BASIN DESCRIPTION

Basin EX-1 (0.13 AC, 95%, Q_5 = 0.62 cfs, Q_{100} = 0.97 cfs) is located on the northeast side of the site. It consists of a portion of the existing building, parking area and drive isles. Runoff from Basin EX-1 overland flows northeast where it is captured by an existing storm curb inlet.

Basin EX-2 (0.14 AC, 90.5%, Q_5 = 0.56 cfs, Q_{100} = 0.88 cfs) is located on the northwest side of the site. It consists of a portion of the existing building, parking area, drive isles, and some landscape. Runoff from Basin EX-2 is conveyed northwest via curb gutters where it is captured by an existing storm curb inlet.

Basin EX-3 (0.06 AC, 91.8%, Q_5 = 0.28 cfs, Q_{100} = 0.44 cfs) is located on the west side of the site. It consists of parking area, trash enclosure, drive isles, and some landscape. Runoff from Basin EX-3 is conveyed west via curb gutters where it is captured by an existing storm curb inlet.

Basin EX-4 (0.29 AC, 89.2%, Q_5 = 1.24 cfs, Q_{100} = 1.94 cfs) is located on the south side of the site. It consists of a portion of the existing building, parking area, drive isles, and some landscape. Runoff from Basin EX-4 is conveyed northwest via sheet flow and curb gutters where it is captured by an existing storm curb inlet.

Basin EX-5 (0.08 AC, 20%, Q_5 = 0.11 cfs, Q_{100} = 0.18 cfs) is located on the north side of the site. It consists primarily of landscape, with a single monument sign present. Runoff from Basin EX-5 overland flows towards County Line Rd and is captured by an existing public storm inlet within the ROW.

Basin EX-6 (0.26 AC, 62.2%, Q_5 = 0.79 cfs, Q_{100} = 1.23 cfs) is located on the east side of the site. It consists of a portion of the existing building, parking area, drive isles, and some landscape. Runoff from Basin EX-6 overland flows east towards Parkland Rd and is captured by an existing public storm inlet within the ROW.

Basin EX-7 (0.01 AC, 20%, Q_5 = 0.0 cfs, Q_{100} = 0.0 cfs) is located on the south side of the site. It consists primarily of landscape, with a single monument sign present. Runoff from Basin EX-5 overland flows south towards Westview Road and is captured by an existing public storm inlet within the ROW.

III. DESIGN CRITERIA

REGULATION

The design of the stormwater management system for this project was prepared in accordance with the criteria set forth in the *Douglas County Storm Drainage Design and Technical Criteria Manual* and the Mile High Flood District *Urban Storm Drainage Criteria Manual*.

HYDROLOGIC CRITERIA

The drainage calculations are based on *Mile High Flood District Criteria*. The design point rainfall values listed below were obtained from NOAA Atlas 14 / *Review Agency Criteria* for the 60-minute storm duration (refer to Appendix A).

Table 1 – Precipitation Data

	Average Recurrence Interval (Years)					
	2	**5**	**10**	**25**	**50**	**100**
One Hour Depth (in)	0.85	1.12	1.40	1.86	2.28	2.75

The time of concentration for each basin was calculated using the SF-2 form, which is based on the *Urban Storm Drainage Criteria Manual, Chapter 6* (refer to Appendix B).

The time of concentration for each basin was assumed to be 5 minutes due to the small basin sizes and geometry.

The rational method was used to calculate peak flows as the tributary areas are less than 100 acres. The rational method has proven to be accurate for basins of this size and is based on the following formula:

Q = CIA

Where:
Q = Peak Discharge (cfs)
C = Runoff Coefficient – the ratio between the runoff volume from an area and the average rate of rainfall depth over a given duration for that area
I = Runoff Intensity (inches / hour) for a duration equal to the time of concentration
A = Drainage Area (acres)

The runoff coefficients are calculated based on the catchment's soil type, land use, percent imperviousness, and design storm for each basin per Chapter 6, Section 2.5.1 of the MHFD *Urban Storm Drainage Criteria Manual, Volume 1*. Appendix B contains runoff coefficient calculations for all sub-basins. The 5-year runoff coefficient was used for the minor storm event and the 100-year runoff coefficient was used for the major storm event.

HYDRAULIC CRITERIA

Storm Sewer

On-site storm sewer pipe sizes will typically range from 6” to 8” PVC for roof drains and up to 18” existing RCP for pipes conveying larger areas of the site. The 100-year runoff is conveyed through the on-site stormwater system in an open channel condition, so Manning’s equationF was used to calculate pipe capacities via Flowmaster v8i. Detailed capacity calculations will be included in the final drainage report.

The storm sewer system hydraulic analysis was completed using Bentley StormCAD CONNECT. This software routes flows based on the longest upstream Time of Concentration (t_c) at each junction. Given the controlling t_c, StormCAD CONNECT calculates the flow at the junction with the corresponding intensity (e.g., i_5 and i_{100}) and aggregate CA. All storm sewer pipes were sized for the 100-year storm event. Hydraulic grade lines for the storm drain system were calculated using StormCAD. Detailed StormCAD calculations are in Appendix D.

The storm sewer system hydraulic analysis was completed using Bentley StormCAD CONNECT. Methods and parameters conform to those recommended in the MHFD *Urban Storm Drainage Criteria Manual*. A tabular summary of the analysis performed by StormCAD can be found in Appendix D. Pipes have been designed so that the hydraulic grade lines are contained within the pipes for the minor storm event and are at least 1-foot below finish grade for the major storm event.

Tailwater depth for pipe calculations was determined using the downstream pond water surface elevations.

Detention and Water Quality Facilities

The on-site developed runoff will drain to a private regional detention pond that will provide Full Spectrum Detention (FSD) for the site in the existing condition. FSD is a design concept introduced by Mile High Flood District and is the recommended design approach because it provides better outlet control of the full range of runoff rates passing through the detention facility, compared to traditional single- or multi-stage concepts. The proposed flows from the site are lower than the existing, ensuring conformance with the existing drainage report and design.

The applicable Water Quality Control Measure for this site is the Water Quality Capture Volume (WQCV), which requires treatment of runoff from at least 80% of the applicable site area. An area of 0.12 acres, consisting of a portion of existing Basin EX-6 and all of existing Basin EX-5 (equivalent to proposed Basins OS-1 and OS-2), is excluded from the applicable WQCV area because it lies within existing easements and is not being modified as part of the proposed development. The remaining 0.85 acres will be routed through the proposed hydrodynamic separator for water quality treatment, resulting in approximately 87% of the total site area and 100% of the applicable site area receiving treatment, thereby exceeding the 80% requirement.

The required water quality treatment will be provided by a hydrodynamic separator designed in accordance with manufacturer specifications and agency criteria. The separator has been designed to treat 2-year flows and bypass all other events up to a 100-year storm event. Calculations of flows are in Appendix C, and the hydrodynamic separator details are in Appendix E.

IV. FOUR STEP PROCESS

The Four Step Process is used to minimize the adverse impacts of urbanization and is a vital component of developing a balanced, sustainable project. Below identifies the approach to the four-step process:

1. **Employ Runoff Reduction Practices**
   The proposed development uses Low Impact Development (LID) practices to reduce runoff at the source. Rather than creating point discharges that are directly connected to impervious areas, runoff is routed through pervious areas to promote infiltration and minimize directly connected impervious areas (MDCIA). Grass buffers and swales are used where practical.

2. **Treat and Slowly Release Water Quality Capture Volume (WQCV)**
   This step utilizes formalized water quality capture volume to slow the release of runoff from the site. The proposed hydrodynamic separator will provide treatment without detaining the volumes.

3. **Stabilize Stream Channels**
   This step implements stabilization to channels to accommodate developed flows while protecting infrastructure and controlling sediment loading from erosion in the drainageways. Erosion protection in the form of a low tailwater stilling basin is provided at the outfall point to the channel to prevent scouring of the channel from point discharges.

4. **Implement Source Controls**
   The biggest source control BMP is public education which can be found on the City of Lone Tree website and discusses topics such as: pet waste, car washing, lawn care, fall leaves, and snow melt and deicer. The landscaping and snow removal is handled completely by the property management to ensure proper lawn mowing and grassing clipping disposal, lawn aeration, and fertilizer application is being followed. Snow removal will also be handled by the property manager to ensure proper consideration of snow pile placement and use of deicing chemicals.

V. DRAINAGE PLAN

GENERAL CONCEPT

The proposed drainage plan for the site consists of four major drainage basins. The A-, B-, C-, and Offsite - basins. Runoff from A, B, and C basins will be collected via on site storm system, and treated with an on-site hydrodynamic separator. Runoff from Offsite basins will be free released offsite untreated.

SPECIFIC DETAILS

Basin A-1 (0.12 AC, 32.6%, Q_5 = 0.3 cfs, Q_{100} = 0.8 cfs) is on the southwest side of the site and consists of some sidewalk and landscape areas. Runoff from Basin A-1 will be conveyed via 2’ concrete pan north into the curb and gutter at Design Point A1 and into the basin A-2. From there it will be routed via curb and gutter into the inlet IN-1 at design point A2 and then via pipe to the hydrodynamic separator HD-1 (Design Point C1). From there runoff is conveyed to Pond A via proposed and existing storm system.

Basin A-2 (0.31 AC, 82.3%, Q_5 =1.0 cfs, Q_{100} = 2.1 cfs) is located on the west side of the site. It consists of paved drives and landscape. Runoff from Basin A-2 will be conveyed via curb gutters and inlet IN-1 at design point A2 and then via pipe to the hydrodynamic separator HD-1 (Design Point C1). From there runoff is conveyed to Pond A via existing storm system.

Basin A-3 (0.27 AC, 85.9%, Q_5 =1.0 cfs, Q_{100} = 1.8 cfs) is located on the southeast side of the site. It consists of paved drives and landscape. Runoff from Basin A-3 will be conveyed via curb gutters and inlet IN-2 at design point A3 and then via pipe to the hydrodynamic separator HD-1 (Design Point C1). From there runoff is conveyed to Pond A via existing storm system.

Basin B-1 (0.08 AC, 95.0%, Q_5 = 0.5 cfs, Q_{100} = 0.8 cfs) consists of the fuel canopy. Runoff from Basin A1 will be conveyed via roof drain downspouts and a storm pipe to a tee connection at Design Point B1, and then via pipe to the hydrodynamic separator HD-1 (Design Point C1). From there runoff is conveyed to Pond A via proposed and existing storm system.

Basin C-1 (0.08 AC, 95.0%, Q_5 = 0.5 cfs, Q_{100} = 0.7 cfs) consists of the store. Runoff from Basin C1 will be conveyed via roof drain downspouts directly into the hydrodynamic separator at Design Point C1. From there runoff is conveyed to Pond A via proposed and existing storm system.

Basin OS-1 (0.08 AC, 20.0%, Q_5 = 0.1 cfs, Q_{100} = 0.5 cfs) is located on the north side of the site, and it consists of only landscape areas. OS Runoff from Basin OS-1 overland flows off site towards County Line Rd and is captured by an existing public storm inlet within the ROW.

Basin OS-2 (0.05 AC, 27.9%, Q_5 = 0.1 cfs, Q_{100} = 0.4 cfs) is located on the north side of the site, and it consists of a portion of a drive and landscape areas. Runoff from Basin OS-2 overland flows off site towards Parkland Rd and is captured by an existing public storm inlet within the ROW.

STORMWATER CONVEYANCE FACILITIES

Runoff from the project site will be conveyed through the site through a series of concrete curb and gutter, inlets, and storm sewer pipe. All proposed inlets and pipes have adequate capacity for the 100-year storm event. Inlet capacity and StormCAD pipe sizing calculations have been provided in Appendix D. On-site runoff will be conveyed to existing regional Pond A.

VI. CONCLUSIONS

COMPLIANCE WITH STANDARDS

The design presented in this Final Drainage Report for Murphy USA Fuel Station has been prepared in accordance with the design standards and guidelines presented in the Douglas County Criteria, the Douglas County Criteria, and sound engineering principles. The proposed improvements will generally maintain existing drainage patterns. This report shows that the design will be adequate for the proposed development and runoff from the proposed site improvements will be safely conveyed, treated, and discharged to the receiving watershed with no adverse effects.

VARIANCES

No variance(s) requested at this time.

VII. REFERENCES

Urban Storm Drainage Criteria Manual, Mile High Flood District, March 2024 (with current revisions).

Storm Drainage Design and Technical Criteria Manual, Douglas County, July 2008.

Phase III Drainage Report for Park Meadows, Paller-Roberts Engineering, April 7, 1995.

Flood Insurance Rate Map – Anytown County, State and Incorporated Areas Community Panel No. 08005C0459L, Effective February 17, 2017.

NRCS Web Soil Survey – Anytown County Area, Colorado as available through the Natural Resources Conservation Service National Cooperative Soil Survey web site via Web Soil Survey 2.0.

APPENDIX A

EXHIBITS AND FIGURES

United States Department of Agriculture

NRCS

Natural Resources Conservation Service

A product of the National Cooperative Soil Survey, a joint effort of the United States Department of Agriculture and other Federal agencies, State agencies including the Agricultural Experiment Stations, and local participants

Custom Soil Resource Report for Castle Rock Area, Colorado

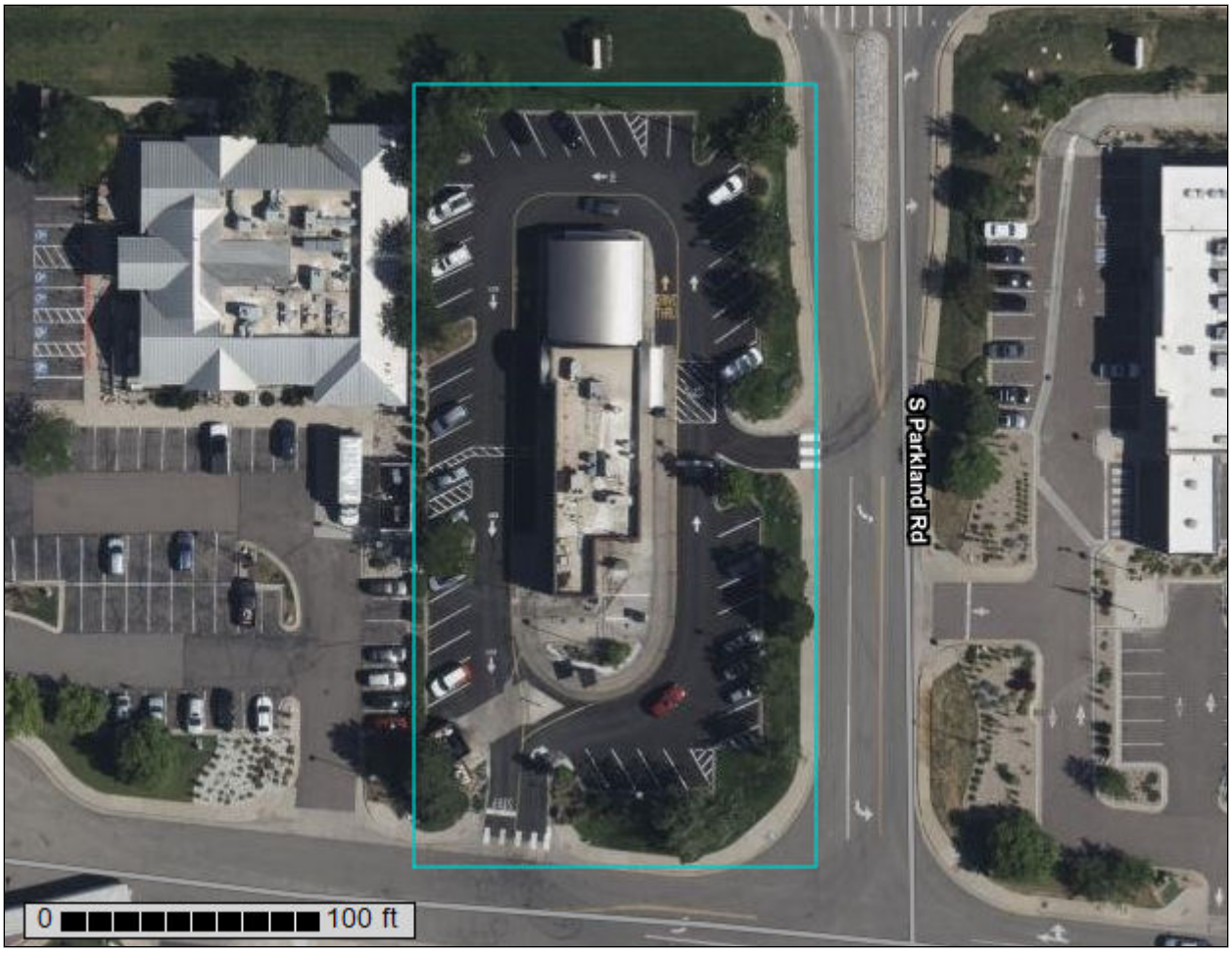

February 5, 2026

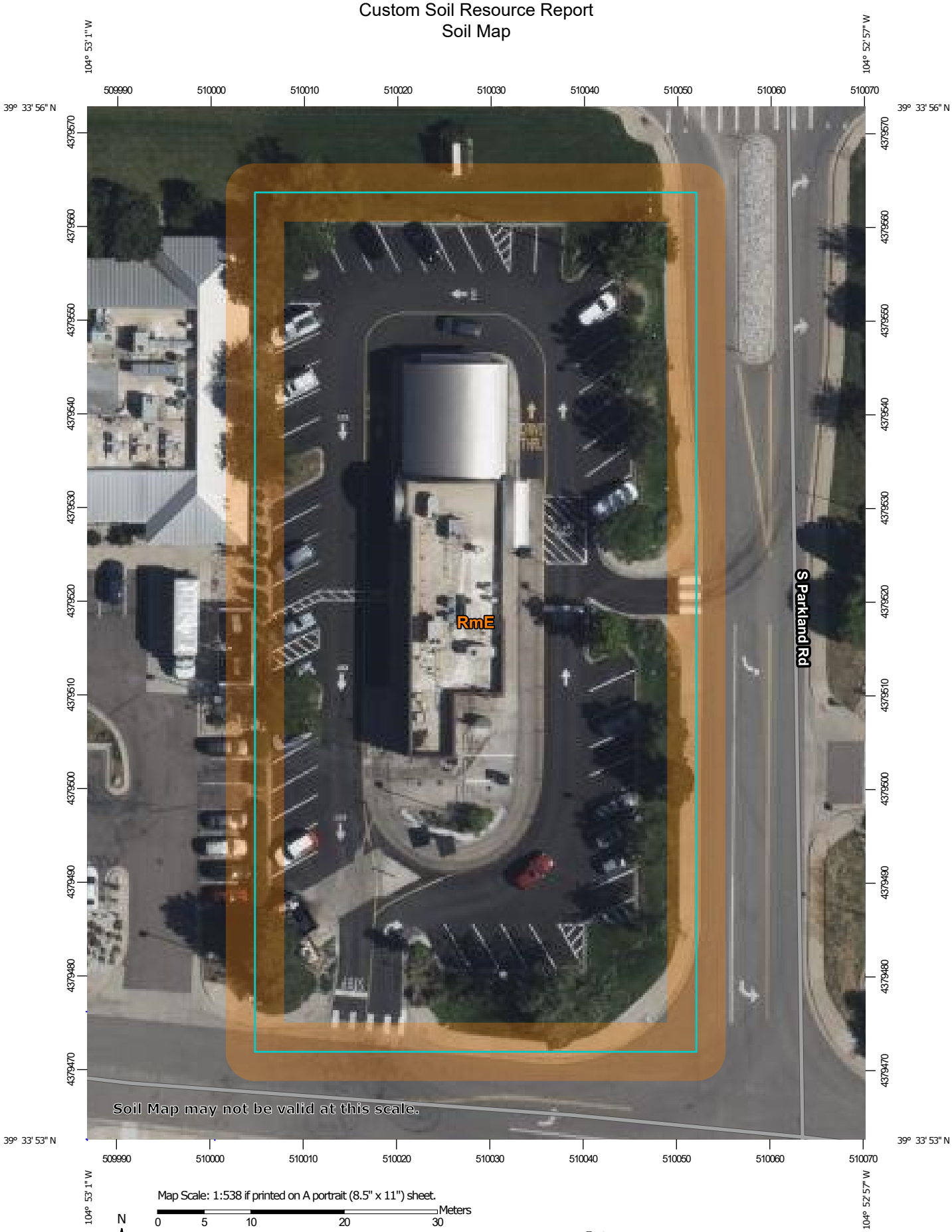

Map Scale: 1:538 if printed on A portrait (8.5" x 11") sheet.

N

Meters
0 5 10 20 30

Feet
0 25 50 100 150

Map projection: Web Mercator Corner coordinates: WGS84 Edge tics: UTM Zone 13N WGS84

MAP LEGEND

Area of Interest (AOI)
- Area of Interest (AOI)

Soils
- Soil Map Unit Polygons
- Soil Map Unit Lines
- Soil Map Unit Points

Special Point Features
- Blowout
- Borrow Pit
- Clay Spot
- Closed Depression
- Gravel Pit
- Gravelly Spot
- Landfill
- Lava Flow
- Marsh or swamp
- Mine or Quarry
- Miscellaneous Water
- Perennial Water
- Rock Outcrop
- Saline Spot
- Sandy Spot
- Severely Eroded Spot
- Sinkhole
- Slide or Slip
- Sodic Spot
- Spoil Area
- Stony Spot
- Very Stony Spot
- Wet Spot
- Other
- Special Line Features

Water Features
- Streams and Canals

Transportation
- Rails
- Interstate Highways
- US Routes
- Major Roads
- Local Roads

Background
- Aerial Photography

MAP INFORMATION

The soil surveys that comprise your AOI were mapped at 1:20,000.

Warning: Soil Map may not be valid at this scale.

Enlargement of maps beyond the scale of mapping can cause misunderstanding of the detail of mapping and accuracy of soil line placement. The maps do not show the small areas of contrasting soils that could have been shown at a more detailed scale.

Please rely on the bar scale on each map sheet for map measurements.

Source of Map: Natural Resources Conservation Service
Web Soil Survey URL:
Coordinate System: Web Mercator (EPSG:3857)

Maps from the Web Soil Survey are based on the Web Mercator projection, which preserves direction and shape but distorts distance and area. A projection that preserves area, such as the Albers equal-area conic projection, should be used if more accurate calculations of distance or area are required.

This product is generated from the USDA-NRCS certified data as of the version date(s) listed below.

Soil Survey Area: Castle Rock Area, Colorado
Survey Area Data: Version 18, Aug 29, 2025

Soil map units are labeled (as space allows) for map scales 1:50,000 or larger.

Date(s) aerial images were photographed: Mar 1, 2023—Sep 1, 2023

The orthophoto or other base map on which the soil lines were compiled and digitized probably differs from the background imagery displayed on these maps. As a result, some minor shifting of map unit boundaries may be evident.

Map Unit Legend

Map Unit Symbol	Map Unit Name	Acres in AOI	Percent of AOI
RmE	Renohill-Buick complex, 5 to 25 percent slopes	1.1	100.0%
Totals for Area of Interest		**1.1**	**100.0%**

Map Unit Descriptions

The map units delineated on the detailed soil maps in a soil survey represent the soils or miscellaneous areas in the survey area. The map unit descriptions, along with the maps, can be used to determine the composition and properties of a unit.

A map unit delineation on a soil map represents an area dominated by one or more major kinds of soil or miscellaneous areas. A map unit is identified and named according to the taxonomic classification of the dominant soils. Within a taxonomic class there are precisely defined limits for the properties of the soils. On the landscape, however, the soils are natural phenomena, and they have the characteristic variability of all natural phenomena. Thus, the range of some observed properties may extend beyond the limits defined for a taxonomic class. Areas of soils of a single taxonomic class rarely, if ever, can be mapped without including areas of other taxonomic classes. Consequently, every map unit is made up of the soils or miscellaneous areas for which it is named and some minor components that belong to taxonomic classes other than those of the major soils.

Most minor soils have properties similar to those of the dominant soil or soils in the map unit, and thus they do not affect use and management. These are called noncontrasting, or similar, components. They may or may not be mentioned in a particular map unit description. Other minor components, however, have properties and behavioral characteristics divergent enough to affect use or to require different management. These are called contrasting, or dissimilar, components. They generally are in small areas and could not be mapped separately because of the scale used. Some small areas of strongly contrasting soils or miscellaneous areas are identified by a special symbol on the maps. If included in the database for a given area, the contrasting minor components are identified in the map unit descriptions along with some characteristics of each. A few areas of minor components may not have been observed, and consequently they are not mentioned in the descriptions, especially where the pattern was so complex that it was impractical to make enough observations to identify all the soils and miscellaneous areas on the landscape.

The presence of minor components in a map unit in no way diminishes the usefulness or accuracy of the data. The objective of mapping is not to delineate pure taxonomic classes but rather to separate the landscape into landforms or landform segments that have similar use and management requirements. The delineation of such segments on the map provides sufficient information for the development of resource plans. If intensive use of small areas is planned, however, onsite investigation is needed to define and locate the soils and miscellaneous areas.

An identifying symbol precedes the map unit name in the map unit descriptions. Each description includes general facts about the unit and gives important soil properties and qualities.

Soils that have profiles that are almost alike make up a *soil series*. Except for differences in texture of the surface layer, all the soils of a series have major horizons that are similar in composition, thickness, and arrangement.

Soils of one series can differ in texture of the surface layer, slope, stoniness, salinity, degree of erosion, and other characteristics that affect their use. On the basis of such differences, a soil series is divided into *soil phases*. Most of the areas shown on the detailed soil maps are phases of soil series. The name of a soil phase commonly indicates a feature that affects use or management. For example, Alpha silt loam, 0 to 2 percent slopes, is a phase of the Alpha series.

Some map units are made up of two or more major soils or miscellaneous areas. These map units are complexes, associations, or undifferentiated groups.

A *complex* consists of two or more soils or miscellaneous areas in such an intricate pattern or in such small areas that they cannot be shown separately on the maps. The pattern and proportion of the soils or miscellaneous areas are somewhat similar in all areas. Alpha-Beta complex, 0 to 6 percent slopes, is an example.

An *association* is made up of two or more geographically associated soils or miscellaneous areas that are shown as one unit on the maps. Because of present or anticipated uses of the map units in the survey area, it was not considered practical or necessary to map the soils or miscellaneous areas separately. The pattern and relative proportion of the soils or miscellaneous areas are somewhat similar. Alpha-Beta association, 0 to 2 percent slopes, is an example.

An *undifferentiated group* is made up of two or more soils or miscellaneous areas that could be mapped individually but are mapped as one unit because similar interpretations can be made for use and management. The pattern and proportion of the soils or miscellaneous areas in a mapped area are not uniform. An area can be made up of only one of the major soils or miscellaneous areas, or it can be made up of all of them. Alpha and Beta soils, 0 to 2 percent slopes, is an example.

Some surveys include *miscellaneous areas*. Such areas have little or no soil material and support little or no vegetation. Rock outcrop is an example.

Castle Rock Area, Colorado

RmE—Renohill-Buick complex, 5 to 25 percent slopes

Map Unit Setting

National map unit symbol: jqzy
Landscape: Sloping to steep uplands
Elevation: 5,500 to 6,200 feet
Mean annual precipitation: 15 to 17 inches
Mean annual air temperature: 48 to 50 degrees F
Frost-free period: 120 to 135 days
Farmland classification: Not prime farmland

Map Unit Composition

Renohill and similar soils: 50 percent
Buick and similar soils: 30 percent
Minor components: 20 percent
Estimates are based on observations, descriptions, and transects of the mapunit.

Description of Renohill

Setting

Landscape: Sloping to steep uplands
Landform: Hills
Landform position (three-dimensional): Side slope, base slope
Down-slope shape: Linear
Across-slope shape: Linear
Parent material: Weathered, calcareous clayey shale

Typical profile

H1 - 0 to 3 inches: clay loam
H2 - 3 to 12 inches: clay loam
H3 - 12 to 24 inches: clay loam
H4 - 24 to 28 inches: unweathered bedrock

Properties and qualities

Slope: 5 to 25 percent
Depth to restrictive feature: 20 to 40 inches to paralithic bedrock
Drainage class: Well drained
Runoff class: High
Capacity of the most limiting layer to transmit water (Ksat): Moderately low to moderately high (0.06 to 0.20 in/hr)
Depth to water table: More than 80 inches
Frequency of flooding: None
Frequency of ponding: None
Calcium carbonate, maximum content: 15 percent
Maximum salinity: Nonsaline to very slightly saline (0.0 to 2.0 mmhos/cm)
Available water supply, 0 to 60 inches: Low (about 4.3 inches)

Interpretive groups

Land capability classification (irrigated): None specified
Land capability classification (nonirrigated): 6e
Hydrologic Soil Group: D
Ecological site: R049XC202CO - Loamy Foothill Palmer Divide
Hydric soil rating: No

Description of Buick

Setting

Landscape: Uplands
Landform: Hills
Landform position (three-dimensional): Side slope, base slope
Down-slope shape: Linear
Across-slope shape: Linear
Parent material: Eolian deposits over silty alluvium

Typical profile

H1 - 0 to 4 inches: loam
H2 - 4 to 15 inches: silty clay loam
H3 - 15 to 22 inches: loam
H4 - 22 to 60 inches: sandy clay loam

Properties and qualities

Slope: 5 to 8 percent
Depth to restrictive feature: More than 80 inches
Drainage class: Well drained
Runoff class: Medium
Capacity of the most limiting layer to transmit water (Ksat): Moderately high (0.20 to 0.60 in/hr)
Depth to water table: More than 80 inches
Frequency of flooding: None
Frequency of ponding: None
Calcium carbonate, maximum content: 10 percent
Maximum salinity: Nonsaline to very slightly saline (0.0 to 2.0 mmhos/cm)
Available water supply, 0 to 60 inches: High (about 9.9 inches)

Interpretive groups

Land capability classification (irrigated): None specified
Land capability classification (nonirrigated): 6e
Hydrologic Soil Group: C
Ecological site: R049XC202CO - Loamy Foothill Palmer Divide
Hydric soil rating: No

Minor Components

Manzanola

Percent of map unit: 6 percent
Hydric soil rating: No

Satanta

Percent of map unit: 6 percent
Hydric soil rating: No

Fondis

Percent of map unit: 6 percent
Hydric soil rating: No

Aquic haplustolls

Percent of map unit: 2 percent
Landform: Swales
Hydric soil rating: Yes

National Flood Hazard Layer FIRMette

FEMA

104°53'18"W 39°34'9"N



104°52'41"W 39°33'41"N

0 250 500 1,000 1,500 2,000 Feet

1:6,000

Basemap Imagery Source: USGS National Map 2023

Legend

SEE FIS REPORT FOR DETAILED LEGEND AND INDEX MAP FOR FIRM PANEL LAYOUT

SPECIAL FLOOD HAZARD AREAS
- Without Base Flood Elevation (BFE) *Zone A, V, A99*
- With BFE or Depth *Zone AE, AO, AH, VE, AR*
- Regulatory Floodway

OTHER AREAS OF FLOOD HAZARD
- 0.2% Annual Chance Flood Hazard, Areas of 1% annual chance flood with average depth less than one foot or with drainage areas of less than one square mile *Zone X*
- Future Conditions 1% Annual Chance Flood Hazard *Zone X*
- Area with Reduced Flood Risk due to Levee. See Notes. *Zone X*
- Area with Flood Risk due to Levee *Zone D*

OTHER AREAS
- NO SCREEN — Area of Minimal Flood Hazard *Zone X*
- Effective LOMRs
- Area of Undetermined Flood Hazard *Zone D*

GENERAL STRUCTURES
- Channel, Culvert, or Storm Sewer
- Levee, Dike, or Floodwall

OTHER FEATURES
- 20.2 — Cross Sections with 1% Annual Chance
- 17.5 — Water Surface Elevation
- Coastal Transect
- Base Flood Elevation Line (BFE)
- Limit of Study
- Jurisdiction Boundary
- Coastal Transect Baseline
- Profile Baseline
- Hydrographic Feature

MAP PANELS
- Digital Data Available
- No Digital Data Available
- Unmapped

N

The pin displayed on the map is an approximate point selected by the user and does not represent an authoritative property location.

This map complies with FEMA's standards for the use of digital flood maps if it is not void as described below. The basemap shown complies with FEMA's basemap accuracy standards

The flood hazard information is derived directly from the authoritative NFHL web services provided by FEMA. This map was exported on 2/10/2026 at 4:52 PM and does not reflect changes or amendments subsequent to this date and time. The NFHL and effective information may change or become superseded by new data over time.

This map image is void if the one or more of the following map elements do not appear: basemap imagery, flood zone labels, legend, scale bar, map creation date, community identifiers, FIRM panel number, and FIRM effective date. Map images for unmapped and unmodernized areas cannot be used for regulatory purposes.

APPENDIX B

EXCERPTS FROM PREVIOUS REPORTS

PHASE III

DRAINAGE REPORT

FOR

PARK MEADOWS

VOLUME 1

DRAINAGE REPORT AND STORM WATER DETENTION ANALYSIS

AT

DOUGLAS COUNTY, COLORADO

February 15, 1995

Revised April 7, 1995

Prepared For:

THE HAHN CO.
4350 La Jolla Village Drive, Suite 700
San Diego, Ca. 92122-1233

Prepared by:

PALLER-ROBERTS ENGINEERING
5701 Slauson Ave. Suite 208
Culver City, Ca. 90230

Phase III Drainage Report
Park Meadows

INDEX

PART I **DRAINAGE REPORT**

1. Introduction
2. Project Site Description
3. Pre-existing Drainage
4. Existing Drainage
5. Proposed Development
6. Proposed Grading
7. Proposed Drainage
8. Storm Water Detention
9. Erosion Control
10. Ownership and Maintenance
11. References and Criteria
12. Certifications

PART II **STORM WATER DETENTION ANALYSIS**

1. Basin A
2. Basin B-1 and B-2
3. Basin C
4. Basin H

PART III **HYDROLOGY**

PART IV **HYDRAULICS**

PART I – DRAINAGE REPORT

1. INTRODUCTION

This report presents our calculations and findings to support the proposed storm drainage system as depicted on the enclosed design plans and data contained herein.

2. PROJECT SITE DESCRIPTION

The project site is located at the northwest corner of Interstate Highway 25 and Colorado Route 470 in Douglas County, Colorado. The site contains approximately 180 acres and is bounded on the north by County Line Road, on the east by I-25 on the south by C-470 and on the west by Yosemite Street. The site is located within Section 3, T.6S, R.67W. (See enclosed Vicinity Map).

The adjacent property to the north of County Line Road is currently undeveloped except for a vacant K-Mart building and site consisting of approximately 8 acres; a small office building with parking containing approximately 1.5 acres and an apartment complex on approximately 12 acres. I-25 on the east side is along a ridge with a portion of the highway right-of-way draining along the project site. The southerly and westerly sides of the site generally slope to the south and west respectively, except for portions of the C-470 right-of-way which drain along the frontage. This area drains into two (2) existing culverts which transfer water from the north side of C-470 to the south side.

The project site was graded in 1984 and 1985 to accommodate a different site plan. The site was left in a barren state with little vegetation. We understand that the site is disked annually to destroy any weeds that might grow and to decrease erosion.

3. PRE-EXISTING DRAINAGE

Figure 1 shows the drainage patterns that existed on the site prior to the 1984-85 grading work that was completed. This indicates that approximately two-thirds (2/3) of the site (127 acres) drained to the northwest along the southerly side of County Line Road to a 66" CMP culvert which transfers runoff under Yosemite Street, beneath the adjoining property west of Yosemite, to Willow Creek where it discharges. Willow Creek in turn flows northerly through a triple box culvert beneath County Line Road. The Creek continues northerly through a residential subdivision and into a regional storm water detention basin.

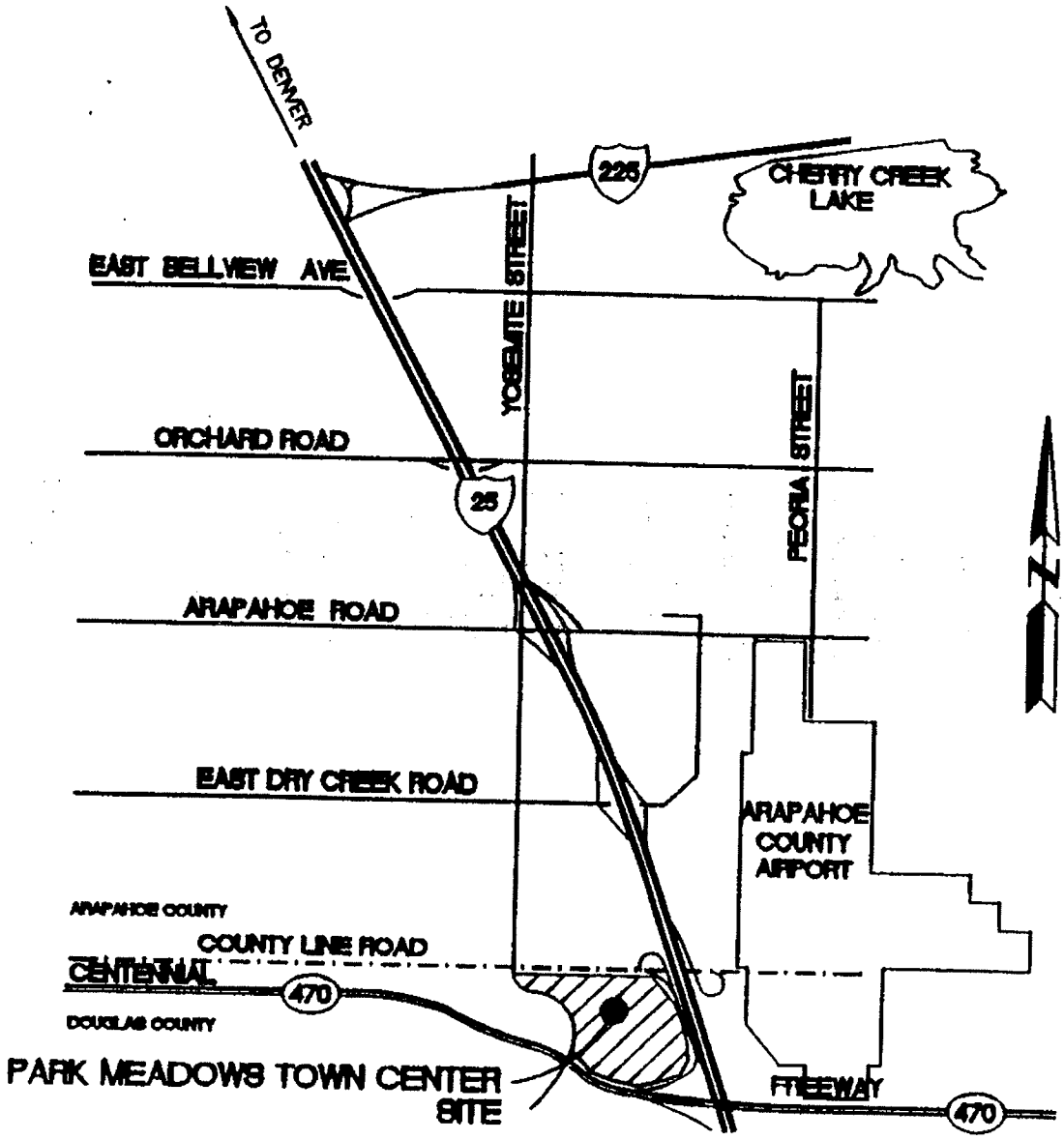

VICINITY MAP

NOT TO SCALE

A portion of the northerly property (8 Acres) also flows through an existing 42" CMP culvert beneath County Line Road into a ditch along the north side of the road where it travels to the west.

The southerly portion of the site (45 Acres) drained into two (2) culverts; 1) a 54" CMP through C-470 and; 2) a 36" CMP culvert through Yosemite Street which continues into a 36" CMP culvert through C-470. Both of these culverts eventually discharge into Willow Creek. The following table summarizes the pre-existing flow conditions using the current County design criteria (see calculations)

Discharge Location	Area (Acres)	Runoff (cfs) Q100
Area to NW	127	176
Area to N	8	19
Area to S (54")	26	56
Area to S (36")	19	39
TOTAL	180	290

4. EXISTING DRAINAGE

In 1984 and 1985 the site underwent extensive grading work. At that time drainage patterns were altered somewhat but not significantly. Figure 2 depicts the current condition of the site. The existing 66" CMP culvert at the northwest corner of the site was extended easterly to the southwest corner of Chester Street and County Line Road. An existing 60" culvert from the northeast corner of Chester Street and County Line Road was intercepted. This appears to include the 8 acre portion of the site which drained to the north through the 42" culvert. Inlets were constructed in County Line Road and connected to this new 66" pipe. A 36" CMP lateral was also extended at the connection east of Yosemite Street to provide for drainage of the project site.

In reviewing the existing conditions and the documents prepared by Gruen Associates (Architect/Engineer for the 1984-85 grading) there were no storm water detention basins constructed or planned in connection with that grading operation. Desilting basins and/or erosion control facilities are also very minimal.

5. PROPOSED DEVELOPMENT

The project site contains a total of approximately 180 acres. A major regional shopping center is proposed on approximately 102 acres. The shop-

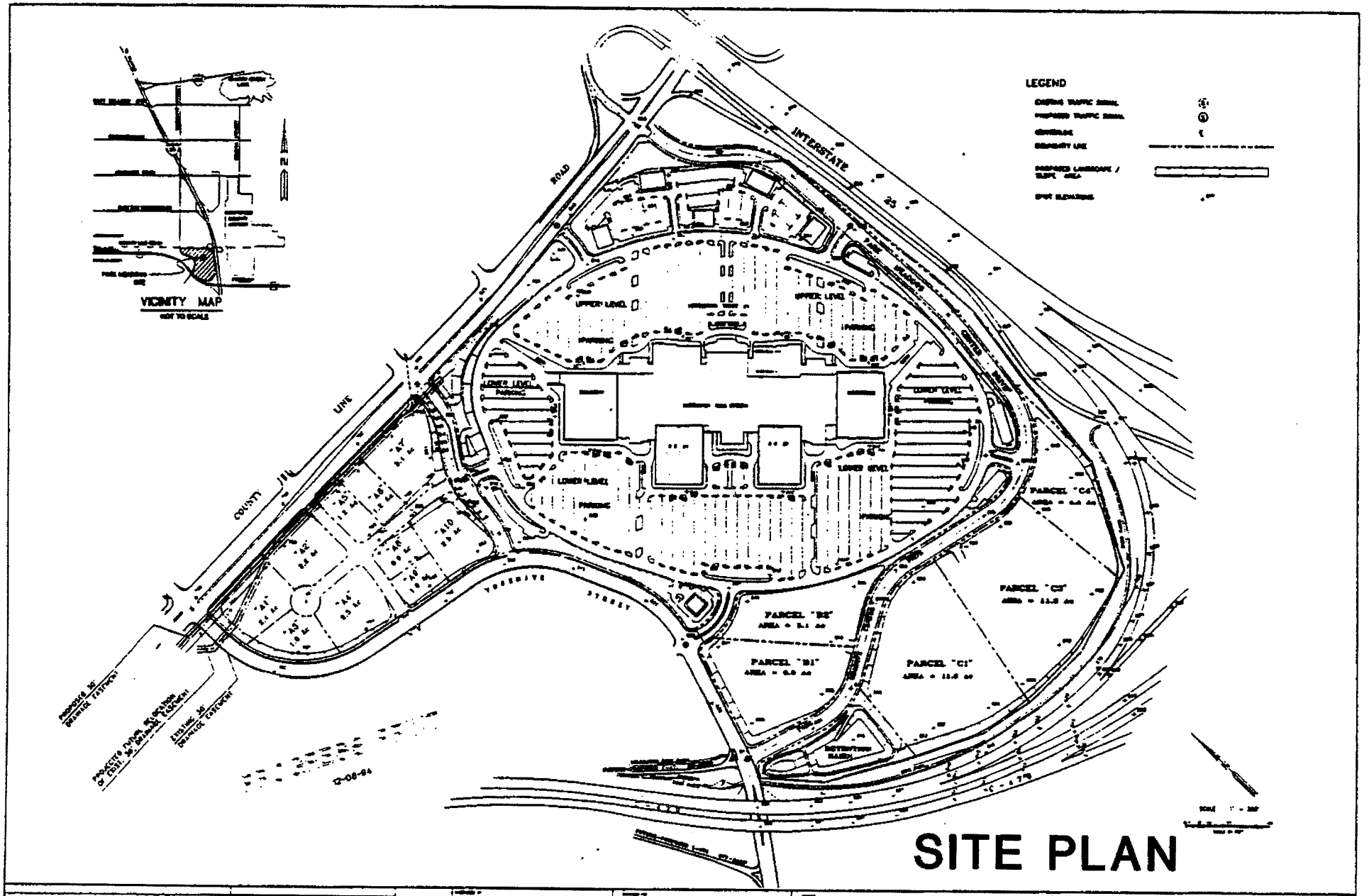

MILLER-ROBERTS ENGINEERING, INC.	PARK MEADOWS ASSOCIATES c/o THE HAHN COMPANY	PARK MEADOWS DOUGLAS COUNTY, COLORADO	PERIPHERAL PROPERTY EXHIBIT

ping center will consist of a 2-level enclosed mall with four (4) major department stores. An On-grade parking lot with access and circulation roadways is proposed to support the project and provide ingress and egress. Several additional parcels of land are proposed for other retail uses and/or commercial uses. Those uses have yet to be defined and are currently shown as graded areas. A roadway system is proposed which will consist of Park Meadows Center Drive and Chester Street to provide access to the mall and various additional parcels. (See enclosed site plan.)

These roadways will be constructed to County standards and will be deeded to the County after construction. The enclosed site plan depicts the proposed development.

6. PROPOSED GRADING

The site is proposed to be graded in a manner which maintains drainage patterns similar to that which existed in the pre-existing condition. An underground storm drainage system is proposed for the mall site and within each of the future development parcels as well as the proposed roadways. The enclosed rough grading plans (Dwgs. RG-1 thru RG-6) depict the proposed grading. Based on these plans, approximately 1.8 million cubic yards of cut and fill will be required. Grading will be required over the entire surface of the site.

7. PROPOSED DRAINAGE

The "Proposed Hydrology Plan" - H-1, depicts the major and minor drainage areas. The on-site drainage system is designed to carry the 10 year frequency storm. In addition, several segments have been designed to carry the 100 year frequency storm as described below.

Drainage Area "A" encompasses the southeasterly portion of the mall site along with the future development parcels south of Park Meadows Center Drive and Park Meadows Center Drive right-of-way. This area contains a total of 85.0 acres. Storm drain lines "MM", "AA", "FF", "NN", "EE", "GG", "LL", and "UU" collect runoff from the proposed development and carry it to Storm Water Detention Basin "A". In order to divert the 100 year storm water from the shopping center portion of Area "A" to prevent potential flooding of Yosemite Street we have enlarged the piping to handle the 100 year storm. This occurs for line "MM", line "AA" from 10+00 to 14+35, and line "DD" from 10+00 to 11+10 with large curb inlets to collect the 100 year storm water.

Drainage Area "B" encompasses the northerly portion of the mall site and contains a total of 32.0 acres. Storm drain lines "BB" and "TT" collect runoff from the proposed development and carry it into Storm Water Detention Basin B-1 which in turn empties into Basin B-2. Flows exceeding the 10 year frequency storm will sheet flow into County Line Road due to the proposed grading. This flow will run westerly in County Line Road until it is intercepted via a large curb inlet adjacent to Detention Basin B-2. The curb

inlet and piping has been sized to handle the difference between the 10 year and 100 year frequency storms from the project site.

Drainage Area "C" encompasses the southwesterly portion of the site, which includes the future development area northeast of Yosemite Street and Park Meadows Center Drive, as well as a portion of Park Meadows Center Drive right-of-way. This area contains a total of 13.5 acres. Storm drain line "CC" collects runoff from the Park Meadows Center Drive right-of-way and extends into the future development area north of the street. In order to get the runoff from the 100 year frequency storm into the basin, the piping has been sized to handle the 100 year storm.

Drainage Area "H" encompasses the westerly portion of the site between Yosemite Street and Chester Street, along with the southwesterly portion of the mall site. This area contains a total of 33.6 acres. Storm drain lines "HH", "JJ", and "KK" collect runoff from the above area and carry it to Storm Water Detention Basin H. Line "HH" has been sized to handle the 100 year frequency storm runoff so that Yosemite Street is not adversely impacted from the mall site.

SUMMARY OF PROPOSED DRAINAGE

Discharge Location	Area (Acres)	Runoff (cfs) Q10	Q100
On-Site Drainage			
Area A	85	318	511
Area B	32	128	203
Area C	13.5	55	85
Area H	33.6	149	217
Total	164.1	650	1016

8. STORM WATER DETENTION

Per Douglas County Criteria and to accommodate the proposed development, five (5) on-site storm water detention basins are proposed as follows:

Basins B-1 and 2 - are located along the easterly side of proposed Chester Street. These basins are at different levels and interconnected with a 36" pipe so that flow can be retarded in both basins. Storm drain line "BB" discharges into Basin B-2, the upper basin, and is retarded as it flows into the lower Basin B-1. This basin also retards the flow, and then discharges into the existing 66" diameter County storm drain at the southwest corner of County Line Road and Chester Street.

Basin H - is located at the southeast corner of Yosemite Street and County Line Road. This basin retards the flow from the area between Yosemite Street and proposed Chester Street plus the westerly portion of the regional mall site. Storm drain line "HH" discharges into this basin with the basin outlet connected to the existing 66" diameter County storm drain.

Basins A and C - are located at the southerly end of the site adjacent to the C-470 right-of-way near Yosemite Street. Basin A is at a higher level with its discharge into the existing 54" diameter culvert through C-470. Basin C is at a lower elevation and discharges into the existing 36" diameter culvert beneath Yosemite Street. Storm drain line "AA" discharges into Basin "A" and line "CC" discharges into Basin "C".

DETENTION BASIN SUMMARY

	Proposed inflow data		Peak outflow	Approx. storage
Basin	Area (AC)	Q100 (cfs)	Q	Volume (ac-ft)
A	85.0	511	56.0*	14.1
C	13.5	85	39.0*	1.2
B-1& B-2	32	203	32	4.5
H	33.6	217	33.6	5.1
TOTAL	164.1	1016	160.6	24.9

The enclosed Part II - Storm Water Detention Analysis contains the calculations to support this design.

9. EROSION CONTROL

As previously discussed, the site was graded in 1984 and 1985. Since that time the site has been vacant and is disked annually.

Grading of the site to accommodate the current project is anticipated in August of 1994, and be complete some time in December. Since the latter portion of the construction schedule falls in the period when more rainfall is likely to occur, we have incorporated a series of erosion control features such as desilting basins, sediment traps, inlet filters and straw bale drop structures, per the criteria set forth in Addendum "A" to the County Drainage Manual.

These facilities are intended to be maintained during construction and would be removed following construction.

Temporary landscaping is proposed on the major slope areas to reduce both wind and water erosion.

Since the existing site is roughly graded, our proposed grading operation will not create additional erosion potential since the surface will remain the same. By installing the proposed erosion control devices we would decrease the amount of water erosion from the site. Wind erosion will be kept to a minimum with watering of the site during the grading operation.

10. OWNERSHIP AND MAINTENANCE

The existing culverts and drainage system within County Line Road are currently owned and maintained by the State of Colorado Dept. of Transportation (CDOT). We understand that these facilities will eventually be turned over to Douglas County.

The existing 66" CMP drain is owned and maintained by Douglas County. The segment from Yosemite Street to Willow Creek lies within an easement as previously shown and included in the plats previously provided. A portion of this drain near Yosemite Street falls outside of the easement as discussed. The segment between Yosemite Street and Chester Street runs through the project site and is not currently covered by an easement. An easement for this segment will be provided.

The existing 54" and 36" culverts beneath C-470 are owned and maintained by the CDOT while the 36" culvert beneath Yosemite Street falls under the jurisdiction of Douglas County.

Easements have been shown around each of the proposed storm water detention basins. These should be maintained by the County or some other public agency since they serve numerous parcels which may eventually be owned by different parties.

We have also shown easements for those storm drain lines which carry storm water from public facilities of off-site areas. We propose that those facilities also be maintained by the County.

DETENTION BASIN SUMMARY

BASIN	DEPT. ft	STORAGE ac-ft	MAX. OUTFLOW cfs	ORIFICE in.	BOTTOM ELEVATION	W.S.(HGL) ELEVATION
A	12.8	14.1	54.2	24"	5815.50	5828.83
B2	11.4	1.7	51.1	24"	5797.00	5808.40
B1	11.4	2.8	28.8	18"	5791.00	5802.40
C	6.4	1.2	38.2	24"	5806.00	5813.40
H	15.2	5.1	33.3	18"	5765.00	5780.20

PALLER-ROBERTS ENGINEERING, INC.
Consulting Civil Engineers
5701 Slauson Avenue Suite 208
CULVER CITY, CALIFORNIA 90230
(213) 641-1853

JOB PARK MEADOWS

SHEET NO. _____ OF _____

CALCULATED BY _____ DATE Feb. 14, 1995

CHECKED BY _____ DATE _____

SCALE _____

AREA "A" -

- 10 YEAR DEVELOPED RATE

A = 85.0 ac C = 0.85 I = 4.41 in/hr (T_c = 10.60 min)

Q = CIA = (0.85)(4.41 in/hr)(85.0 ac) = 318.6 cfs

- 100 YEAR DEVELOPED RATE

A = 85.0 ac C = 0.85 I = 7.07 in/hr (T_c = 9.85 min)

Q = CIA = (0.85)(7.07 in/hr)(85.0 ac) = 510.8 cfs

PALLER-ROBERTS ENGINEERING, INC.
Consulting Civil Engineers
5701 Slauson Avenue Suite 208
CULVER CITY, CALIFORNIA 90230
(213) 641-1853

JOB PARK MEADOWS
SHEET NO. _____ OF _____
CALCULATED BY _____ DATE 12/16/94
CHECKED BY _____ DATE _____
SCALE _____

DETENTION STORAGE CALCULATION

A. DRAINAGE AREA A

$A_H = 26.5$ ac

$A_D = 85.0$ ac

- TIME OF CONCENTRATION, T_c

$T_c = T_i + T_t$

$= 20 \text{ min} + 8 \text{ min}$

$= 28$ min

- INTENSITY, I (100 YR)

$I_{100} = 4.25$ in/hr

- RUNOFF, Q_H (100 YR)

$Q_{100} = C I A$

$= (0.56)(4.25 \text{ in/hr})(26.5 \text{ ac})$

$Q_{100} = 56$ cfs

INITIAL TIME, T_i

$$T_i = \frac{1.8(1.1 - C_5)\sqrt{L}}{\sqrt[3]{S}}$$

$$= \frac{1.8(1.1 - 0.15)\sqrt{500}}{\sqrt[3]{7}}$$

$T_i = 20$ min.

TRAVEL TIME, T_t

$$T_t = \frac{L}{60V}$$

$$= \frac{1400'}{(60)(3 \text{ ft/sec})}$$

$T_t = 8$ min.

- RUNOFF, Q per DOUGLAS COUNTY CRITERIA OF 1 cfs/ac (developed)

FOR $A_D = 85$ ac $\quad Q_{100} = 85.0$ cfs

Since 56 cfs < 85 cfs

Use HISTORIC Release Rate $\quad Q_{100} = 56$ cfs

PRODUCT 284-1 (Shade Sheets) 205-1 (Padded) /NEBS/ Inc., Groton, Mass. 01471 To Order PHONE TOLL FREE 1-800-225-6380

PALLER-ROBERTS ENGINEERING, INC.
Consulting Civil Engineers
5701 Slauson Avenue Suite 208
CULVER CITY, CALIFORNIA 90230
(213) 641-1853

JOB PARK MEADOWS
SHEET NO. _____ OF _____
CALCULATED BY _____ DATE 12/16/94
CHECKED BY _____ DATE _____
SCALE _____

- STORAGE VOLUME

DOUGLAS COUNTY CRITERIA

$$K_{100} = (1.78\,I - 0.002\,I^2 - 3.56)/1000$$
$$= (1.78(95) - 0.002(95)^2 - 3.56)/1000$$
$$= 0.1475$$

$$V_{100} = KA$$
$$= (0.1475)(85\text{ ac})$$
$$V_{100} = 12.5\text{ ac-ft}$$

DETENTION BASIN "A" HAS 13.50 ac-ft STORAGE

NOTE

THEORETICALLY, FROM 85.0 ac OF DEVELOPED AREA, 85.0 cfs CAN BE RELEASED. HOWEVER, HISTORIC DISCHARGE TO EXISTING 54" PIPE IS ONLY 56 CFS.

THE DIFFERENCE BETWEEN 85.0 cfs - 56.0 cfs = 29.0 cfs WILL BE TRANSFERED TO DETENTION BASIN "C".

SEE DRAINAGE AREA "C" ANALYSIS

PRODUCT 204-1 (Single Sheets) 205-1 (Padded) NEBS Inc., Groton, Mass. 01471. To Order PHONE TOLL FREE 1-800-225-6380

PALLER-ROBERTS ENGINEERING, INC.
Consulting Civil Engineers
5701 Slauson Avenue Suite 208
CULVER CITY, CALIFORNIA 90230
(213) 641-1853

JOB PARK MEADOWS
SHEET NO. _____ OF _____
CALCULATED BY _____ DATE _____
CHECKED BY _____ DATE _____
SCALE _____

ORIFICE DISCHARGE (AREA "A")

MAX. RELEASE RATE, Q = 56.0 cfs

$Q = C_D A \sqrt{2gH}$

$C_D = 0.60$

$g = 32.2 \text{ ft/sec}^2$

H Head ft	24" Discharge cfs	27" Discharge cfs	30" Discharge cfs	Elevation
15	58.6			
14	56.6			
13	54.6			
12	52.4	66.3		
11	50.2	63.5		
10	47.8	60.5	74.7	
9	45.4	57.4	70.9	
8	42.8	54.1	66.6	
7	40.0	50.7	62.5	
6	37.1	46.9	57.9	
5	33.8	42.8	52.9	
4	30.3	38.3	47.3	
3	26.2	33.2	40.9	
2	21.4	27.1	33.4	
1	15.1	19.1	23.6	
0	0	0	0	

24" RCP @ MAX. HEAD = 13.7' (Q = 56.0 cfs)

27" RCP @ MAX. HEAD = 8.5' (Q = 56.0 cfs)

30" RCP @ MAX. HEAD = 5.6' (Q = 56.0 cfs

PRODUCT 204-1 (Single Sheets) 205-1 (Padded) Ampad Inc., Groton, Mass. 01471. To Order PHONE TOLL FREE 1-800-225-6380

PALLER-ROBERTS ENGINEERING, INC.
Consulting Civil Engineers
5701 Slauson Avenue Suite 208
CULVER CITY, CALIFORNIA 90230
(213) 641-1853

JOB PARK MEADOWS
SHEET NO. _____ OF _____
CALCULATED BY _____ DATE 10/31/94
CHECKED BY _____ DATE _____
SCALE _____

AREA "A" (DEVELOPED)

- DRAINAGE AREA

  DEVELOPED, A = 85.0 ac A = 85.0 ac.

- SOIL TYPE

  SOIL TYPE "C"

- RUNOFF CURVE NUMBER, CN

  COMMERCIAL CN = 92 CN = 92

- STORM DEPTH

  100 YR - 6 HR STORM DEPTH, P = 3.40 in. P = 3.40 in

- PEAK DISCHARGE

T_c = $Q = CIA = (0.85)(7.07\ in/hr)(85.0) = 510.8$

$Q_p = 510.8$ cfs

- ULTIMATE SOIL STORAGE CAPACITY, S (in)

$$S = \frac{1000}{CN} - 10 = \frac{1000}{92} - 10 = 0.87$$

S = 0.87

- RUNOFF DEPTH

$$Q^* = \frac{(P - 0.2S)^2}{P + 0.8S} = \frac{(3.40 - (0.2)(0.87))^2}{(3.40 + (0.8)(0.87)} = 2.54\ in$$

$Q^* = 2.54$ in

- RUNOFF VOLUME

$V = Q^* A = (2.54)(85)(1ft/12')(43560\ ft^2/ac)$ V = 784,070 cuft

PRODUCT 204-1 (Single Sheets) 205-1 (Padded) AMBER Inc., Groton, Mass. 01471 To Order PHONE TOLL FREE 1-800-225-6380

PALLER-ROBERTS ENGINEERING, INC.
Consulting Civil Engineers
5701 Slauson Avenue Suite 208
CULVER CITY, CALIFORNIA 90230
(213) 641-1853

JOB PARK MEADOWS

SHEET NO. _____ OF _____

CALCULATED BY _____ DATE 10/31/94

CHECKED BY _____ DATE _____

SCALE _____

- TIME TO PEAK

$$T_p = \frac{V}{(1.39\ Q_p)} = \frac{783,717}{(1.39)(510.8)(60)} \qquad T_p = 18.4 \text{ min.}$$

- SMALL WATERSHED HYDROGRAPH FORMULATION METHOD (MALCOM, et al 1986)

$T_p = 18.4$ min. $\qquad Q_p = 510.8$ cfs

$1.25\ T_p = (1.25)(18.5) = 23.0$ min.

For $0 \le t \le 1.25\ T_p$

$0 \le t \le$

$$Q_1 = \frac{Q_p}{2}\left[1 - \cos\left(\frac{\pi t}{T_p}\right)\right] \qquad \text{where } \pi = 180 \text{ radian}$$

For $t > 1.25\ T_p$

$t >$

$$Q = 4.34\ Q_p\ e^{\left[-1.30\left(\frac{t}{T_p}\right)\right]}$$

- SEE HYDROGRAPH ORDINATE TABULATION (Time vs Discharge)

DRAINAGE AREA "A"

$1.25\ T_p = (1.25)(18.4) = 23.0$ min

DATA (100 YR. STORM)	S.C.S.	3/28/95
Tp= 18.5 min.	HYDROGRAPH CONSTRUCTION	
Qp= 510.8 cfs	TIME vs DISCHARGE	
A= 85.0 cfs		

TIME T	DISCHARGE Q	TIME T	DISCHARGE Q	TIME T	DISCHARGE Q
0	0				
2.5	22.9	77.5	9.3		
5.0	87.5	80.0	7.8		
7.5	182.2	82.5	6.5		
10.0	290.0	85.0	5.5		
12.5	391.7	87.5	4.6		
15.0	469.0	90.0	3.9		
17.5	507.8	92.5	3.2		
20.0	501.4	95.0	2.7		
22.5	450.9	97.5	2.3		
25.0	379.2	100.0	1.9		
27.5	317.8	102.5	1.6		
30.0	266.4	105.0	1.3		
32.5	223.3	107.5	1.1		
35.0	187.1	110.0	1.0		
37.5	156.8	112.5	0.8		
40.0	131.4	115.0	0.7		
42.5	110.2	117.5	0.6		
45.0	92.3	120.0	0.5		
47.5	77.4				
50.0	64.9				
52.5	54.4				
55.0	45.6				
57.5	38.2				
60.0	32.0				
62.5	26.8				
65.0	22.5				
67.5	18.8				
70.0	15.8				
72.5	13.3				
75.0	11.1				

OUTLET
24" ORIFICE DISCHARGE

DETENTION BASIN STORAGE ANALYSIS

DETENTION BASIN "A"

	OUTLET Q_{MAX} = 56.0 cfs DEPTH vs STORAGE							24" ORIFICE DEPTH vs DISCHARGE	
ELEV.	AREA in^2	AREA ac	INCREMENT AREA ac	INCREMENT DEPTH ft	INCREMENT VOLUME ac-ft	CUMULATIVE VOLUME ac-ft	CUMULATIVE VOLUME ft^2	DEPTH ft	DISCHARGE cfs
5831	30.2	1.73	1.70	1	1.70	17.77			
5830	28.9	1.66	1.62	1	1.62	16.07		14	56.6
5829	27.6	1.58	1.55	1	1.55	14.45		13	54.6
5828	26.3	1.51	1.47	1	1.47	12.90		12	52.4
5827	25.0	1.43	1.39	1	1.39	11.43		11	50.2
5826	23.6	1.35	1.32	1	1.32	10.04		10	47.8
5825	22.3	1.28	1.25	1	1.25	8.72		9	45.4
5824	21.0	1.21	1.17	1	1.17	7.47		8	42.8
5823	19.7	1.13	1.10	1	1.10	6.30		7	40.0
5822	18.4	1.06	1.03	1	1.03	5.20		6	37.1
5821	17.3	0.99	0.96	1	0.96	4.17		5	33.8
5820	16.2	0.93	0.90	1	0.90	3.21		4	30.3
5819	15.1	0.87	0.84	1	0.84	2.31		3	26.2
5818	13.9	0.80	0.77	1	0.77	1.47		2	21.4
5817	12.8	0.73	0.70	1	0.70	0.70		1	15.1
5816	11.7	0.67				0		0	0
5815									
5814									
5813									
5812									
5811									

FILE F:\HERMAN\STORAGE

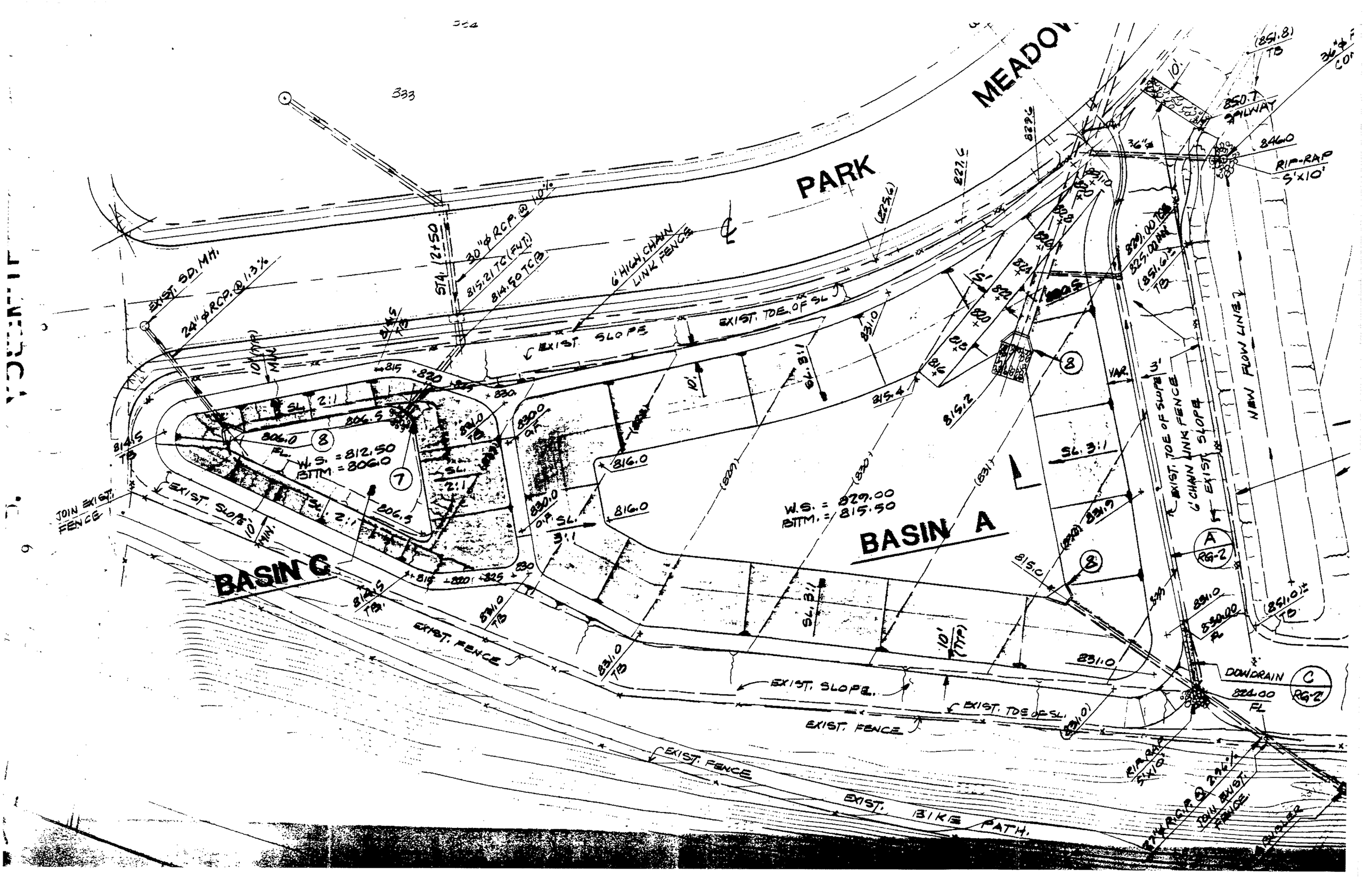

PARK
MEADOW
BASIN A
BASIN C
W.S. = 812.50
BTTM = 806.0
W.S. = 829.00
BTTM. = 815.50
EXIST. SD. MH.
24" ϕ RCP. @ 1.3%
30" ϕ RCP. @ 1.0%
STA. 12+50
815.21 TC (FUT.)
814.50 TCB
6' HIGH CHAIN LINK FENCE
EXIST. SLOPE
EXIST. TOE OF SL.
EXIST. FENCE
EXIST. BIKE PATH.
JOIN EXIST. FENCE
NEW FLOW LINE
EXIST. TOE OF SLOPE
6' CHAIN LINK FENCE
EXIST. SLOPE
DOWDRAIN
824.00 FL
RIP-RAP 5'x10'
850.7 SPILWAY
846.0
(851.8) TB
(851.6) TB
(851.0) TB
830.00 FL
831.0
831.0 TB
814.5 TB
816.0
815.4
815.2
815.0
831.9
SL. 2:1
SL. 3:1
806.5
806.0 FL.
10' (TYP) MIN.
10' (TYP)
VAR.
3'
A RG-2
C RG-2

APPENDIX C

HYDROLOGIC CALCULATIONS

BASIN SUMMARY TABLE						
Tributary Sub-basin	**Area (acres)**	**C_5**	**C_{100}**	**t_c (min)**	**Q_5 (cfs)**	**Q_{100} (cfs)**
EX-1	0.13	0.81	0.87	5.00	0.53	0.97
EX-2	0.14	0.77	0.85	5.00	0.49	0.88
EX-3	0.06	0.78	0.86	5.00	0.24	0.44
EX-4	0.29	0.76	0.85	5.00	1.07	1.94
EX-5	0.08	0.20	0.57	5.00	0.10	0.18
EX-6	0.26	0.54	0.74	5.00	0.68	1.23
EX-7	0.01	0.20	0.57	5.00	0.00	0.00
Total:	0.97				3.10	5.64

COMPOSITE % IMPERVIOUS CALCULATIONS

Subdivision: Existing Condition
Location: CO, Douglas County - Zone 1

Project Name: Murphy USA - County Line & Parkland
Project No.: MOC148
Calculated By: SE
Checked By: JDP
Date: 3/6/26

Basin ID	Total Area (ac)	Disturbed Soil			High Traffic Gravel			Hardscape & Roofs			Basins Total Weighted % Imp.
		% Imp.	Area (ac)	Weighted % Imp.	% Imp.	Area (ac)	Weighted % Imp.	% Imp.	Area (ac)	Weighted % Imp.	
EX-1	0.13	20	0.00	0.0	80	0.00	0.0	95	0.13	95.00	95.0
EX-2	0.14	20	0.01	1.2	80	0.00	0.0	95	0.13	89.30	90.5
EX-3	0.06	20	0.003	0.9	80	0.00	0.0	95	0.06	90.90	91.8
EX-4	0.29	20	0.02	1.5	80	0.00	0.0	95	0.27	87.70	89.2
EX-5	0.08	20	0.08	20.0	80	0.00	0.0	95	0.00	0.00	20.0
EX-6	0.26	20	0.11	8.8	80	0.00	0.0	95	0.14	53.40	62.2
EX-7	0.01	20	0.01	20.0	80	0.00	0.0	95	0.00	0.00	20.0
Total:	0.97	20	0.24	4.9	80	0.00	0.0	95	0.73	71.70	76.6
Total w/o EX-5	0.89	20	0.15	3.5	81	0.00	0.0	96	0.73	79.40	82.9

Galloway

STANDARD FORM SF-2
TIME OF CONCENTRATION

Subdivision: Existing Condition
Location: CO, Douglas County - Zone 1

Project Name: Murphy USA - County Line & Parkland
Project No.: MOC148
Calculated By: SE
Checked By: JDP
Date: 3/6/26

SUB-BASIN DATA						INITIAL/OVERLAND (Sheet Flow) (T_i)			Shallow Concentrated Flows (T_t)					Tc CHECK		FINAL
BASIN ID	D.A. (AC)	Hydrologic Soils Group	Impervious (%)	C_{100}	C_5	L (FT)	S (%)	T_i (MIN)	L (FT)	S (%)	Cv	VEL. (FPS)	T_t (MIN)	COMP. T_c (MIN)	Regional T_c (MIN)	T_c (MIN)
EX-1	0.13	D	95.0	0.87	0.81	Tc Assumed 5 mins due to basin size										5.0
EX-2	0.14	D	90.5	0.85	0.77	Tc Assumed 5 mins due to basin size										5.0
EX-3	0.06	D	91.8	0.86	0.78	Tc Assumed 5 mins due to basin size										5.0
EX-4	0.29	D	89.2	0.85	0.76	Tc Assumed 5 mins due to basin size										5.0
EX-5	0.08	D	20.0	0.57	0.20	Tc Assumed 5 mins due to basin size										5.0
EX-6	0.26	D	62.2	0.74	0.54	Tc Assumed 5 mins due to basin size										5.0
EX-7	0.01	D	20.0	0.57	0.20	Tc Assumed 5 mins due to basin size										5.0

NOTES:
T_i = (0.395*(1.1 - C_5)*(L)^0.5)/((S)^0.33), S in ft/ft
T_t=L/60V (Velocity From Fig. 501)
Velocity V=Cv*S^0.5, S in ft/ft
Tc Regional = (26-17i)+(L/(60(14i+9)S^0.5)), S in ft/ft, i= Imperviousness expressed as decimal
For Urbanized basins a minimum T_c of 5.0 minutes is required.
For non-urbanized basins a minimum T_c of 10.0 minutes is required

Galloway

STANDARD FORM SF-3
STORM DRAINAGE SYSTEM DESIGN
(RATIONAL METHOD PROCEDURE)

Subdivision: Existing Condition
Location: CO, Douglas County - Zone 1
Design Storm: 5-Year

Project Name: Murphy USA - County Line & Parkland
Project No.: MOC148
Calculated By: SE
Checked By: JDP
Date: 3/6/26

		DIRECT RUNOFF							TOTAL RUNOFF				STREET		PIPE			TRAVEL TIME			
STREET	Design Point	Basin ID	Area (Ac)	Runoff Coeff.	Tc (min)	C*A (Ac)	I (in/hr)	Q (cfs)	Tc (min)	C*A (Ac)	I (in/hr)	Q (cfs)	Slope (%)	Street Flow (cfs)	Design Flow (cfs)	Slope (%)	Pipe Size (inches)	Length (ft)	Velocity (fps)	Tt (min)	REMARKS
		EX-1	0.13	0.81	5.0	0.11	4.85	0.5													
		EX-2	0.14	0.77	5.0	0.10	4.85	0.5													
		EX-3	0.06	0.78	5.0	0.05	4.85	0.2													
		EX-4	0.29	0.76	5.0	0.22	4.85	1.1													
		EX-5	0.08	0.20	5.0	0.02	4.85	0.1													
		EX-6	0.26	0.54	5.0	0.14	4.85	0.7													
		EX-7	0.01	0.20	5.0	0.00	4.85	0.0													

STANDARD FORM SF-3
STORM DRAINAGE SYSTEM DESIGN
(RATIONAL METHOD PROCEDURE)

Subdivision: Existing Condition
Location: CO, Douglas County - Zone 1
Design Storm: 100-Year

Project Name: Murphy USA - County Line & Parkland
Project No.: MOC148
Calculated By: SE
Checked By: JDP
Date: 3/6/26

		DIRECT RUNOFF							TOTAL RUNOFF				STREET		PIPE			TRAVEL TIME			
STREET	Design Point	Basin ID	Area (Ac)	Runoff Coeff.	Tc (min)	C*A (Ac)	I (in/hr)	Q (cfs)	Tc (min)	C*A (Ac)	I (in/hr)	Q (cfs)	Slope (%)	Street Flow (cfs)	Design Flow (cfs)	Slope (%)	Pipe Size (inches)	Length (ft)	Velocity (fps)	Tt (min)	REMARKS
		EX-1	0.13	0.81	5.0	0.11	8.82	1.0													
		EX-2	0.14	0.77	5.0	0.10	8.82	0.9													
		EX-3	0.06	0.78	5.0	0.05	8.82	0.4													
		EX-4	0.29	0.76	5.0	0.22	8.82	1.9													
		EX-5	0.08	0.20	5.0	0.02	8.82	0.2													
		EX-6	0	0.54	5.0	0.14	8.82	1.2													
		EX-7	0.01	0.20	5.0	0.00	8.82	0.0													

COMPOSITE % IMPERVIOUS CALCULATIONS

Subdivision: Proposed Condition
Location: CO, Douglas County - Zone 1

Project Name: Murphy USA - County Line & Parkland
Project No.: MOC148
Calculated By: SE
Checked By: JDP
Date: 6/22/26

Basin ID	Total Area (ac)	Disturbed Soil			High Traffic Gravel			Hardscape & Roofs			Basins Total Weighted % Imp.
		% Imp.	Area (ac)	Weighted % Imp.	% Imp.	Area (ac)	Weighted % Imp.	% Imp.	Area (ac)	Weighted % Imp.	
A-1	0.12	20	0.10	16.7	80	0.00	0.0	95	0.02	15.90	32.6
A-2	0.31	20	0.05	3.4	80	0.00	0.0	95	0.26	78.90	82.3
A-3	0.27	20	0.03	2.4	80	0.00	0.0	95	0.24	83.50	85.9
B-1	0.08	20	0.00	0.0	80	0.00	0.0	95	0.08	95.00	95.0
C-1	0.06	20	0.00	0.0	80	0.00	0.0	95	0.06	95.00	95.0
OS-1	0.08	20	0.08	20.0	80	0.00	0.0	95	0.00	0.00	20.0
OS-2	0.05	20	0.04	17.9	80	0.00	0.0	95	0.01	10.00	27.9
Total	0.97	20	0.31	6.3	80	0.00	0.0	95	0.67	65.10	71.4
Total WQ	0.85	20	0.09	2.0	80	0.00	0.0	95	0.64	71.90	73.9

Galloway

STANDARD FORM SF-2
TIME OF CONCENTRATION

Subdivision: Proposed Condition
Location: CO, Douglas County - Zone 1

Project Name: Murphy USA - County Line & Parkland
Project No.: MOC148
Calculated By: SE
Checked By: JDP
Date: 6/22/26

SUB-BASIN DATA							INITIAL/OVERLAND (Sheet Flow) (T_i)			Shallow Concentrated Flows (T_t)					Tc CHECK		FINAL
BASIN ID	D.A. (AC)	Hydrologic Soils Group	Impervious (%)	C_{100}	C_5	C2 (WQ)	L (FT)	S (%)	T_i (MIN)	L (FT)	S (%)	Cv	VEL. (FPS)	T_t (MIN)	COMP. T_c (MIN)	Regional T_c (MIN)	T_c (MIN)
A-1	0.12	D	32.6	0.62	0.30	0.24	Tc Assumed 5 mins due to basin size										5.0
A-2	0.31	D	82.3	0.82	0.71	0.67	30	6.0	2.2	360	0.8	20.0	1.8	3.4	5.5	15.3	5.5
A-3	0.27	D	85.9	0.84	0.74	0.70	30	1.8	3.0	133	1.7	20.0	2.6	0.9	3.8	12.2	5.0
B-1	0.08	D	95.0	0.87	0.81	0.79	Tc Assumed 5 mins due to basin size										5.0
C-1	0.06	D	95.0	0.87	0.81	0.79	Tc Assumed 5 mins due to basin size										5.0
OS-1	0.08	D	20.0	0.57	0.20	0.14	Tc Assumed 5 mins due to basin size										5.0
OS-2	0.05	D	27.9	0.60	0.26	0.20	Tc Assumed 5 mins due to basin size										5.0

NOTES:
T_i = (0.395*(1.1 - C_5)*(L)^0.5)/((S)^0.33), S in ft/ft
T_t=L/60V (Velocity From Fig. 501)
Velocity V=Cv*S^0.5, S in ft/ft
Tc Regional = (26-17i)+(L/(60(14i+9)S^0.5)), S in ft/ft, i= Imperviousness expressed as decimal
For Urbanized basins a minimum T_c of 5.0 minutes is required.
For non-urbanized basins a minimum T_c of 10.0 minutes is required

Galloway

STANDARD FORM SF-3
STORM DRAINAGE SYSTEM DESIGN
(RATIONAL METHOD PROCEDURE)

Subdivision: Proposed Condition
Location: CO, Douglas County - Zone 1
Design Storm: 2-Year Water Quality Flows

Project Name: Murphy USA - County Line & Parkland
Project No.: MOC148
Calculated By: SE
Checked By: JDP
Date: 6/22/26

		DIRECT RUNOFF							TOTAL RUNOFF				STREET		PIPE			TRAVEL TIME			
STREET	Design Point	Basin ID	Area (Ac)	Runoff Coeff.	Tc (min)	C*A (Ac)	I (in/hr)	Q (cfs)	Tc (min)	C*A (Ac)	I (in/hr)	Q (cfs)	Slope (%)	Street Flow (cfs)	Design Flow (cfs)	Slope (%)	Pipe Size (inches)	Length (ft)	Velocity (fps)	Tt (min)	REMARKS
	A1	A-1	0.12	0.30	5.0	0.04	3.60	0.1													Drains into A2 via concrete pan
	A2	A-2	0.31	0.71	5.5	0.22	3.50	0.8	5.5	0.26	3.50	0.9			0.9	0.5	18	100	2.8	0.6	Collected in Storm Sewer inlet
	A3	A-3	0.27	0.74	5.0	0.20	3.60	0.7	6.1	0.46	3.40	1.6									Collected in Storm Sewer inlet
	B1	B-1	0.08	0.81	5.0	0.07	3.60	0.3													
									6.1	0.53	3.40	1.8			1.8	0.6	18	104	3.7	0.5	
	C1	C-1	0.06	0.81	5.0	0.05	3.60	0.2													
		Total:							6.6	0.58	3.32	1.9									
		OS-1	0.08	0.20	5.0	0.02	3.60	0.1													
		OS-2	0.05	0.26	5.0	0.01	3.60	0.0													

Galloway

STANDARD FORM SF-3
STORM DRAINAGE SYSTEM DESIGN
(RATIONAL METHOD PROCEDURE)

Subdivision: Proposed Condition
Location: CO, Douglas County - Zone 1
Design Storm: 5-Year

Project Name: Murphy USA - County Line & Parkland
Project No.: MOC148
Calculated By: SE
Checked By: JDP
Date: 6/22/26

		DIRECT RUNOFF							TOTAL RUNOFF				STREET		PIPE			TRAVEL TIME			
STREET	Design Point	Basin ID	Area (Ac)	Runoff Coeff.	Tc (min)	C*A (Ac)	I (in/hr)	Q (cfs)	Tc (min)	C*A (Ac)	I (in/hr)	Q (cfs)	Slope (%)	Street Flow (cfs)	Design Flow (cfs)	Slope (%)	Pipe Size (inches)	Length (ft)	Velocity (fps)	Tt (min)	REMARKS
	A1	A-1	0.12	0.30	5.0	0.04	4.85	0.2													Drains into A2 via concrete pan
	A2	A-2	0.31	0.71	5.5	0.22	4.73	1.0	5.5	0.26	4.73	1.2			1.2	0.5	18	100	3.0	0.5	Collected in Storm Sewer inlet
	A3	A-3	0.27	0.74	5.0	0.20	4.85	1.0	6.1	0.46	4.60	2.1									Collected in Storm Sewer inlet
	B1	B-1	0.08	0.81	5.0	0.07	4.85	0.3													
									6.1	0.53	4.60	2.4			2.4	0.6	18	104	4.0	0.4	
	C1	C-1	0.06	0.81	5.0	0.05	4.85	0.2													
		Total:							6.5	0.58	4.50	2.6									
		OS-1	0.08	0.20	5.0	0.02	4.85	0.1													
		OS-2	0.05	0.26	5.0	0.01	4.85	0.0													

STANDARD FORM SF-3
STORM DRAINAGE SYSTEM DESIGN
(RATIONAL METHOD PROCEDURE)

Subdivision: Proposed Condition
Location: CO, Douglas County - Zone 1
Design Storm: 100-Year

Project Name: Murphy USA - County Line & Parkland
Project No.: MOC148
Calculated By: SE
Checked By: JDP
Date: 6/22/26

STREET	Design Point	DIRECT RUNOFF							TOTAL RUNOFF				STREET		PIPE			TRAVEL TIME			REMARKS
		Basin ID	Area (Ac)	Runoff Coeff.	Tc (min)	C*A (Ac)	I (in/hr)	Q (cfs)	Tc (min)	C*A (Ac)	I (in/hr)	Q (cfs)	Slope (%)	Street Flow (cfs)	Design Flow (cfs)	Slope (%)	Pipe Size (inches)	Length (ft)	Velocity (fps)	Tt (min)	
	A1	A-1	0.12	0.62	5.0	0.07	8.82	0.6													
	A2	A-2	0.31	0.82	5.5	0.25	8.59	2.1	5.5	0.32	8.59	2.7			2.7	0.5	18	110	3.8	0.5	
	A3	A-3	0.27	0.74	5.0	0.20	8.82	1.8	6.0	0.52	8.39	4.4									
	B1	B-1	0.08	0.87	5.0	0.07	8.82	0.6													
									6.0	0.59	8.39	5.0			5.0	0.6	18	104	4.8	0.4	
	C1	C-1	0.06	0.87	5.0	0.06	8.82	0.5													
		Total:							6.3	0.65	8.24	5.4									
		OS-1	0.08	0.57	5.0	0.04	8.82	0.4													
		OS-2	0.05	0.60	5.0	0.03	8.82	0.3													

Galloway

APPENDIX D

HYDRAULIC CALCULATIONS

MHFD-Inlet, Version 6.00 (August 2025)

INLET MANAGEMENT

Project: Murphy USA - County Line & Parkland
Minor: 5-year
Major: 100-year

Worksheet Protected

INLET NAME	Inlet IN-1 (A2)	Inlet IN-2 (A3)
Inlet Application (Street or Area)	STREET	STREET
Hydraulic Condition	In Sump	In Sump
Inlet Type	CDOT/Denver 13 Combination	CDOT/Denver 13 Combination
Number of Inlet Units	1	1

USER-DEFINED INPUT

User-Defined Peak Flows

Minor Peak Flow, Q (cfs)	1.20	1.00
Major Peak Flow, Q (cfs)	2.10	1.80

Bypass (Carry-Over) Flow from Upstream Inlets must be organized from upstream (left) to downstream (right) in order for bypass

Receive Bypass Flow from:		
Bypass Flow Description (Optional):		
Minor Bypass Flow Received, Q_b (cfs)		
Major Bypass Flow Received, Q_b (cfs)		

CALCULATED OUTPUT

Minor Total Design Peak Flow, Q (cfs)	1.20	1.00
Major Total Design Peak Flow, Q (cfs)	2.10	1.80
Minor Inlet Interception Capacity, Q_a (cfs)	1.24	1.24
Major Inlet Interception Capacity, Q_a (cfs)	2.49	2.49
Minor Flow Bypassed Downstream, Qb (cfs)	N/A	N/A
Major Flow Bypassed Downstream, Qb (cfs)	N/A	N/A
Minor Flow Capture Percentage, C%	100%	100%
Major Flow Capture Percentage, C%	100%	100%

ALLOWABLE CAPACITY FOR ONE-HALF OF STREET (Minor & Major Storm)

(Based on Regulated Criteria for Maximum Allowable Flow Depth and Spread)

Project: Murphy USA - County Line & Parkland

Inlet ID: Inlet IN-1 (A2)

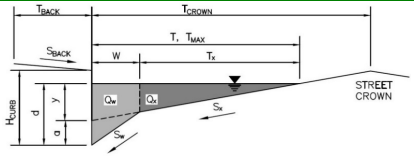

Gutter Geometry:

Maximum Allowable Width for Spread Behind Curb	T_{BACK} =	5.0	ft
Side Slope Behind Curb (leave blank for no conveyance credit behind curb)	S_{BACK} =	0.080	ft/ft
Manning's Roughness Behind Curb (typically between 0.012 and 0.020)	n_{BACK} =	0.020	
Height of Curb at Gutter Flow Line	H_{CURB} =	6.00	inches
Distance from Curb Face to Street Crown	T_{CROWN} =	30.0	ft
Gutter Width	W =	1.73	ft
Street Transverse Slope	S_X =	0.020	ft/ft
Gutter Cross Slope (typically 2 inches over 24 inches or 0.083 ft/ft)	S_W =	0.083	ft/ft
Street Longitudinal Slope - Enter 0 for sump condition	S_O =	0.000	ft/ft
Manning's Roughness for Street Section (typically between 0.012 and 0.020)	n_{STREET} =	0.015	

		Minor Storm	Major Storm	
Max. Allowable Spread for Minor & Major Storm	T_{MAX} =	10.0	14.0	ft
Max. Allowable Depth at Gutter Flowline for Minor & Major Storm	d_{MAX} =	6.0	6.0	inches
Check boxes are not applicable in SUMP conditions		☐	☐	

		Minor Storm	Major Storm	
MINOR STORM Allowable Capacity is not applicable to Sump Condition				
MAJOR STORM Allowable Capacity is not applicable to Sump Condition	**Q_{allow} =**	**SUMP**	**SUMP**	**cfs**

INLET IN A SUMP OR SAG LOCATION

MHFD-Inlet, Version 6.00 (August 2025)

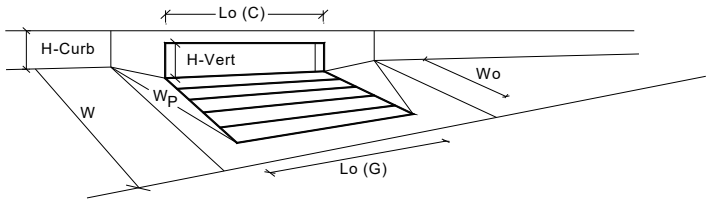

Design Information (Input)		MINOR	MAJOR	
Type of Inlet (CDOT/Denver 13 Combination)	Type =	CDOT/Denver 13 Combination		
Local Depression (additional to continuous gutter depression 'a' from above)	a_{local} =	2.00	2.00	inches
Number of Unit Inlets (Grate or Curb Opening)	No =	1	1	
Water Depth at Flowline (outside of local depression)	Ponding Depth =	3.7	4.7	inches
Grate Information		MINOR	MAJOR	☐ Override Depths
Length of a Unit Grate	L_o (G) =	3.00	3.00	feet
Width of a Unit Grate	W_o =	1.73	1.73	feet
Open Area Ratio for a Grate (typical values 0.15-0.90)	A_{ratio} =	0.43	0.43	
Clogging Factor for a Single Grate (typical value 0.50 - 0.70)	C_f (G) =	0.50	0.50	
Grate Weir Coefficient (typical value 2.15 - 3.60)	C_w (G) =	3.30	3.30	
Grate Orifice Coefficient (typical value 0.60 - 0.80)	C_o (G) =	0.60	0.60	
Curb Opening Information		MINOR	MAJOR	
Length of a Unit Curb Opening	L_o (C) =	3.00	3.00	feet
Height of Vertical Curb Opening in Inches	H_{vert} =	6.50	6.50	inches
Height of Curb Orifice Throat in Inches	H_{throat} =	5.25	5.25	inches
Angle of Throat	Theta =	0.00	0.00	degrees
Side Width for Depression Pan (typically the gutter width of 2 feet)	W_p =	1.73	1.73	feet
Clogging Factor for a Single Curb Opening (typical value 0.10)	C_f (C) =	0.10	0.10	
Curb Opening Weir Coefficient (typical value 2.3-3.7)	C_w (C) =	3.70	3.70	
Curb Opening Orifice Coefficient (typical value 0.60 - 0.70)	C_o (C) =	0.66	0.66	

Low Head Performance Reduction (Calculated)		MINOR	MAJOR	
Depth for Grate Midwidth	d_{Grate} =	0.32	0.40	ft
Depth for Curb Opening Weir Equation	d_{Curb} =	0.17	0.25	ft
Grated Inlet Performance Reduction Factor for Long Inlets	RF_{Grate} =	0.58	0.73	
Curb Opening Performance Reduction Factor for Long Inlets	RF_{Curb} =	N/A	N/A	
Combination Inlet Performance Reduction Factor for Long Inlets	$RF_{Combination}$ =	0.58	0.73	

		MINOR	MAJOR	
Total Inlet Interception Capacity (assumes clogged condition)	**Q_a =**	**1.2**	**2.5**	**cfs**
Inlet Capacity IS GOOD for Minor and Major Storms (>Q Peak)	$Q_{PEAK\ REQUIRED}$ =	1.2	2.1	cfs

ALLOWABLE CAPACITY FOR ONE-HALF OF STREET (Minor & Major Storm)

(Based on Regulated Criteria for Maximum Allowable Flow Depth and Spread)

Project: Murphy USA - County Line & Parkland

Inlet ID: Inlet IN-2 (A3)

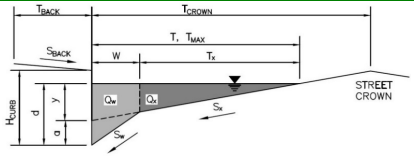

Gutter Geometry:

Maximum Allowable Width for Spread Behind Curb	T_{BACK} =	5.0	ft
Side Slope Behind Curb (leave blank for no conveyance credit behind curb)	S_{BACK} =	0.150	ft/ft
Manning's Roughness Behind Curb (typically between 0.012 and 0.020)	n_{BACK} =	0.020	
Height of Curb at Gutter Flow Line	H_{CURB} =	6.00	inches
Distance from Curb Face to Street Crown	T_{CROWN} =	30.0	ft
Gutter Width	W =	1.73	ft
Street Transverse Slope	S_X =	0.020	ft/ft
Gutter Cross Slope (typically 2 inches over 24 inches or 0.083 ft/ft)	S_W =	0.083	ft/ft
Street Longitudinal Slope - Enter 0 for sump condition	S_O =	0.000	ft/ft
Manning's Roughness for Street Section (typically between 0.012 and 0.020)	n_{STREET} =	0.015	

		Minor Storm	Major Storm	
Max. Allowable Spread for Minor & Major Storm	T_{MAX} =	10.0	14.0	ft
Max. Allowable Depth at Gutter Flowline for Minor & Major Storm	d_{MAX} =	6.0	6.0	inches
Check boxes are not applicable in SUMP conditions		☐	☐	

		Minor Storm	Major Storm	
MINOR STORM Allowable Capacity is not applicable to Sump Condition				
MAJOR STORM Allowable Capacity is not applicable to Sump Condition	**Q_{allow} =**	**SUMP**	**SUMP**	**cfs**

INLET IN A SUMP OR SAG LOCATION

MHFD-Inlet, Version 6.00 (August 2025)

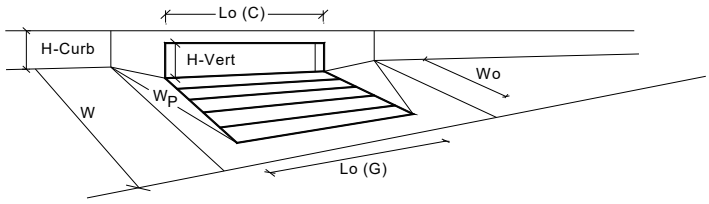

Design Information (Input)		MINOR	MAJOR	
Type of Inlet (CDOT/Denver 13 Combination)	Type =	CDOT/Denver 13 Combination		
Local Depression (additional to continuous gutter depression 'a' from above)	a_{local} =	2.00	2.00	inches
Number of Unit Inlets (Grate or Curb Opening)	No =	1	1	
Water Depth at Flowline (outside of local depression)	Ponding Depth =	3.7	4.7	inches
Grate Information		MINOR	MAJOR	☐ Override Depths
Length of a Unit Grate	L_o (G) =	3.00	3.00	feet
Width of a Unit Grate	W_o =	1.73	1.73	feet
Open Area Ratio for a Grate (typical values 0.15-0.90)	A_{ratio} =	0.43	0.43	
Clogging Factor for a Single Grate (typical value 0.50 - 0.70)	C_f (G) =	0.50	0.50	
Grate Weir Coefficient (typical value 2.15 - 3.60)	C_w (G) =	3.30	3.30	
Grate Orifice Coefficient (typical value 0.60 - 0.80)	C_o (G) =	0.60	0.60	
Curb Opening Information		MINOR	MAJOR	
Length of a Unit Curb Opening	L_o (C) =	3.00	3.00	feet
Height of Vertical Curb Opening in Inches	H_{vert} =	6.50	6.50	inches
Height of Curb Orifice Throat in Inches	H_{throat} =	5.25	5.25	inches
Angle of Throat	Theta =	0.00	0.00	degrees
Side Width for Depression Pan (typically the gutter width of 2 feet)	W_p =	1.73	1.73	feet
Clogging Factor for a Single Curb Opening (typical value 0.10)	C_f (C) =	0.10	0.10	
Curb Opening Weir Coefficient (typical value 2.3-3.7)	C_w (C) =	3.70	3.70	
Curb Opening Orifice Coefficient (typical value 0.60 - 0.70)	C_o (C) =	0.66	0.66	

Low Head Performance Reduction (Calculated)		MINOR	MAJOR	
Depth for Grate Midwidth	d_{Grate} =	0.32	0.40	ft
Depth for Curb Opening Weir Equation	d_{Curb} =	0.17	0.25	ft
Grated Inlet Performance Reduction Factor for Long Inlets	RF_{Grate} =	0.58	0.73	
Curb Opening Performance Reduction Factor for Long Inlets	RF_{Curb} =	N/A	N/A	
Combination Inlet Performance Reduction Factor for Long Inlets	$RF_{Combination}$ =	0.58	0.73	

		MINOR	MAJOR	
Total Inlet Interception Capacity (assumes clogged condition)	**Q_a =**	**1.2**	**2.5**	**cfs**
Inlet Capacity IS GOOD for Minor and Major Storms (>Q Peak)	$Q_{PEAK\ REQUIRED}$ =	1.0	1.8	cfs

Map View

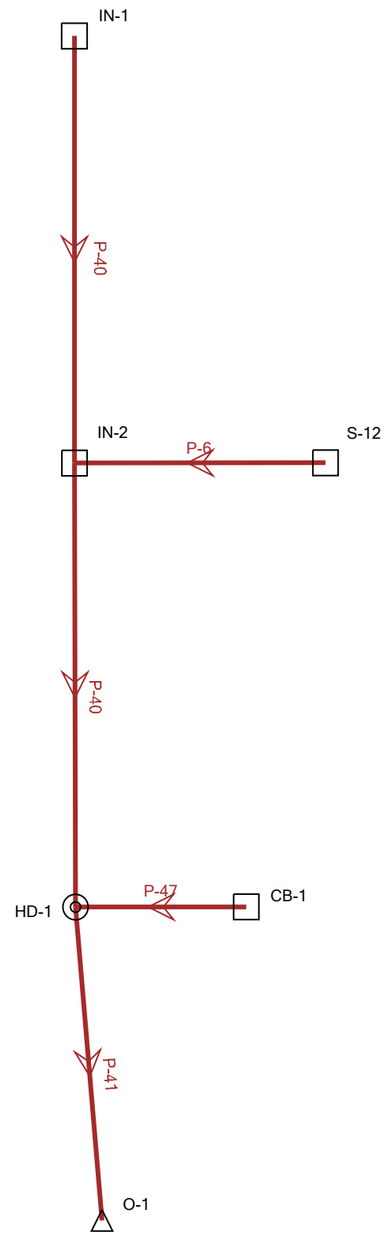

5-YR Conduit Table

Conduit Table - Time: 0.00 hours

Label	Start Node	Stop Node	Invert (Start) (ft)	Invert (Stop) (ft)	Length (User Defined) (ft)	Slope (Calculated) (ft/ft)	Diameter (in)	Manning's n	Flow (cfs)	Velocity (ft/s)	Capacity (Full Flow) (cfs)	Hydraulic Grade Line (In) (ft)	Hydraulic Grade Line (Out) (ft)	Energy Grade Line (In) (ft)	Energy Grade Line (Out) (ft)	Headloss (ft)
P-47	CB-1	HD-1	5,785.60	5,785.41	40.3	0.005	6.0	0.013	0.20	1.97	0.38	5,785.86	5,785.67	5,785.92	5,785.73	0.19
P-40	IN-2	HD-1	5,785.44	5,784.91	104.8	0.005	18.0	0.013	2.50	3.79	7.43	5,786.04	5,785.55	5,786.26	5,785.69	0.57
P-41	HD-1	O-1	5,784.71	5,784.02	74.2	0.009	18.0	0.013	2.70	4.87	10.17	5,785.33	5,784.54	5,785.57	5,784.91	0.66
P-6	S-12	IN-2	5,786.29	5,785.54	59.3	0.013	8.0	0.013	0.30	3.13	1.36	5,786.55	5,786.33	5,786.64	5,786.34	0.30
P-40	IN-1	IN-2	5,786.04	5,785.54	100.8	0.005	18.0	0.013	1.20	3.09	7.43	5,786.45	5,786.32	5,786.60	5,786.35	0.25

5-YR Catch Basin Table

Catch Basin Table - Time: 0.00 hours

ID	Label	Elevation (Rim) (ft)	Elevation (Invert) (ft)	Elevation (Invert Out) (ft)	Flow (Total Out) (cfs)	Capture Efficiency (Calculated) (%)	Hydraulic Grade Line (In) (ft)	Hydraulic Grade Line (Out) (ft)	Headloss Method	Headloss (ft)	HEC-22 Benching Method
104	CB-1	5,792.30	5,785.60	5,785.60	0.20	100.0	5,785.97	5,785.87	HEC-22 Energy (Third Edition)	0.11	Full
105	IN-2	5,787.84	5,785.44	5,785.44	2.50	100.0	5,786.11	5,786.08	HEC-22 Energy (Third Edition)	0.08	Flat
106	S-12	5,790.07	5,786.29	5,786.29	0.30	100.0	5,786.64	5,786.57	HEC-22 Energy (Third Edition)	0.10	Full
107	IN-1	5,788.33	5,786.04	5,786.04	1.20	100.0	5,786.51	5,786.48	HEC-22 Energy (Third Edition)	0.06	Flat

5-YR Manhole Table

Manhole Table - Time: 0.00 hours

ID	Label	Elevation (Rim) (ft)	Elevation (Invert in 1) (ft)	Flow (Total Out) (cfs)	Depth (Out) (ft)	Hydraulic Grade Line (In) (ft)	Hydraulic Grade Line (Out) (ft)	Headloss Method	Headloss (ft)	HEC-22 Benching Method
35	HD-1	5,791.19	5,785.41	2.70	7.18	5,785.40	5,785.38	HEC-22 Energy (Third Edition)	0.07	Half

5-YR Outfall Table

Outfall Table - Time: 0.00 hours

ID	Label	Elevation (Ground) (ft)	Set Rim to Ground Elevation?	Elevation (Invert) (ft)	Boundary Condition Type	Hydraulic Grade (ft)	Flow (Total Out) (cfs)	System Flow Time (min)
108	O-1	5,787.56	True	5,784.02	Free Outfall	5,784.54	2.70	1.259

5-YR Profile A

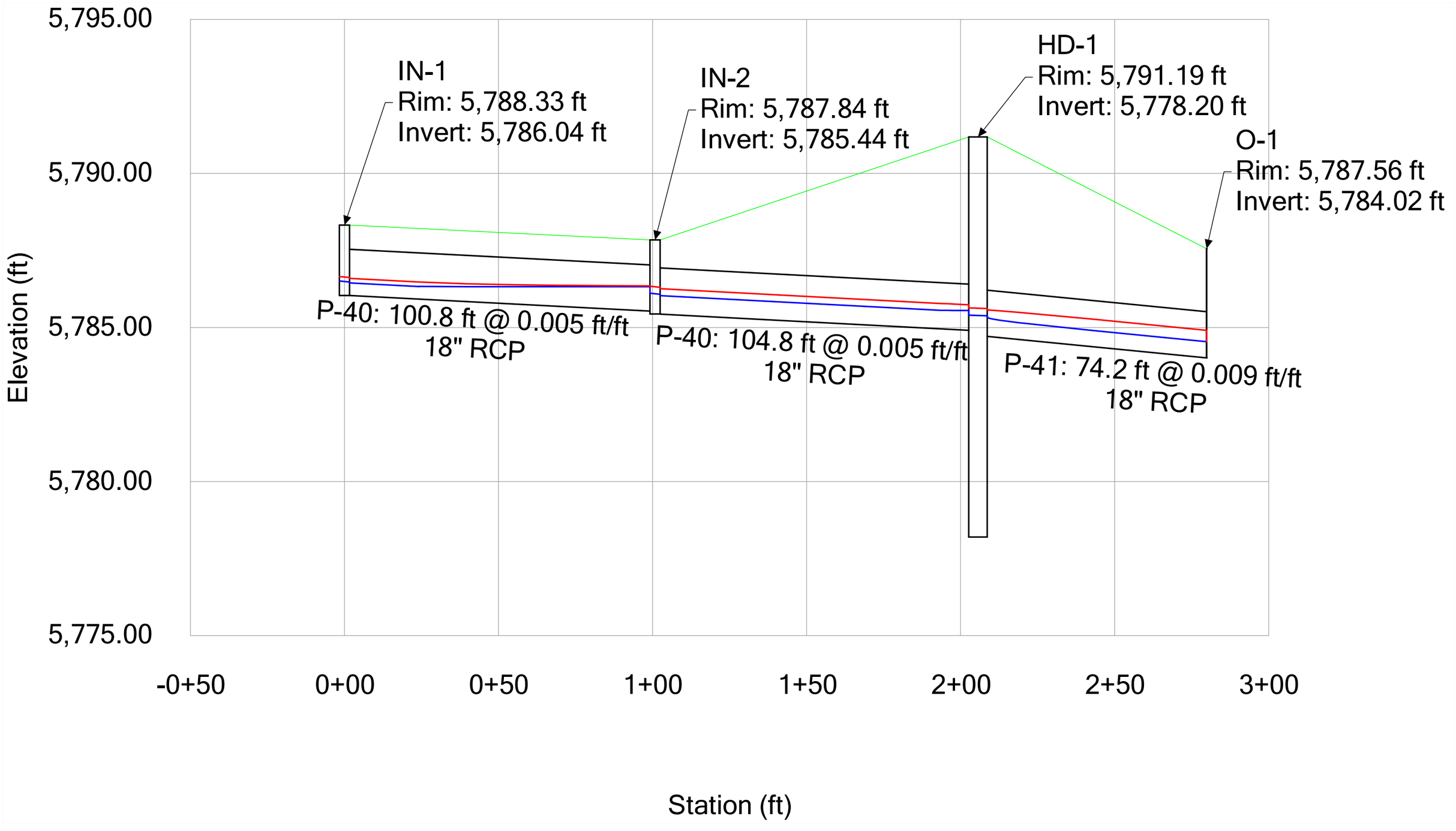

100-YR Conduit Table

Conduit Table - Time: 0.00 hours

Label	Start Node	Stop Node	Invert (Start) (ft)	Invert (Stop) (ft)	Length (User Defined) (ft)	Slope (Calculated) (ft/ft)	Diameter (in)	Manning's n	Flow (cfs)	Velocity (ft/s)	Capacity (Full Flow) (cfs)	Hydraulic Grade Line (In) (ft)	Hydraulic Grade Line (Out) (ft)	Energy Grade Line (In) (ft)	Energy Grade Line (Out) (ft)	Headloss (ft)
P-47	CB-1	HD-1	5,785.60	5,785.41	40.3	0.005	6.0	0.013	0.50	2.55	0.38	5,786.44	5,786.12	5,786.54	5,786.23	0.32
P-40	IN-2	HD-1	5,785.44	5,784.91	104.8	0.005	18.0	0.013	5.10	4.53	7.43	5,786.35	5,786.09	5,786.67	5,786.25	0.42
P-41	HD-1	O-1	5,784.71	5,784.02	74.2	0.009	18.0	0.013	5.60	5.90	10.17	5,785.62	5,784.81	5,786.01	5,785.35	0.66
P-6	S-12	IN-2	5,786.29	5,785.54	59.3	0.013	8.0	0.013	0.60	3.78	1.36	5,786.95	5,786.80	5,786.99	5,786.85	0.15
P-40	IN-1	IN-2	5,786.04	5,785.54	100.8	0.005	18.0	0.013	2.70	3.87	7.43	5,786.84	5,786.80	5,786.96	5,786.85	0.11

100-YR Catch Basin Table

Catch Basin Table - Time: 0.00 hours

ID	Label	Elevation (Rim) (ft)	Elevation (Invert) (ft)	Elevation (Invert Out) (ft)	Flow (Total Out) (cfs)	Capture Efficiency (Calculated) (%)	Hydraulic Grade Line (In) (ft)	Hydraulic Grade Line (Out) (ft)	Headloss Method	Headloss (ft)	HEC-22 Benching Method
104	CB-1	5,792.30	5,785.60	5,785.60	0.50	100.0	5,786.62	5,786.46	HEC-22 Energy (Third Edition)	0.17	Full
105	IN-2	5,787.84	5,785.44	5,785.44	5.10	100.0	5,786.51	5,786.45	HEC-22 Energy (Third Edition)	0.16	Flat
106	S-12	5,790.07	5,786.29	5,786.29	0.60	100.0	5,786.99	5,786.96	HEC-22 Energy (Third Edition)	0.04	Full
107	IN-1	5,788.33	5,786.04	5,786.04	2.70	100.0	5,786.88	5,786.86	HEC-22 Energy (Third Edition)	0.05	Flat

100-YR Manhole Table

Manhole Table - Time: 0.00 hours

ID	Label	Elevation (Rim) (ft)	Elevation (Invert in 1) (ft)	Flow (Total Out) (cfs)	Depth (Out) (ft)	Hydraulic Grade Line (In) (ft)	Hydraulic Grade Line (Out) (ft)	Headloss Method	Headloss (ft)	HEC-22 Benching Method
35	HD-1	5,791.19	5,785.41	5.60	7.55	5,785.80	5,785.75	HEC-22 Energy (Third Edition)	0.18	Half

100-YR Outfall Table

Outfall Table - Time: 0.00 hours

ID	Label	Elevation (Ground) (ft)	Set Rim to Ground Elevation?	Elevation (Invert) (ft)	Boundary Condition Type	Hydraulic Grade (ft)	Flow (Total Out) (cfs)	System Flow Time (min)
108	O-1	5,787.56	True	5,784.02	Free Outfall	5,784.81	5.60	1.030

100-YR Profile A

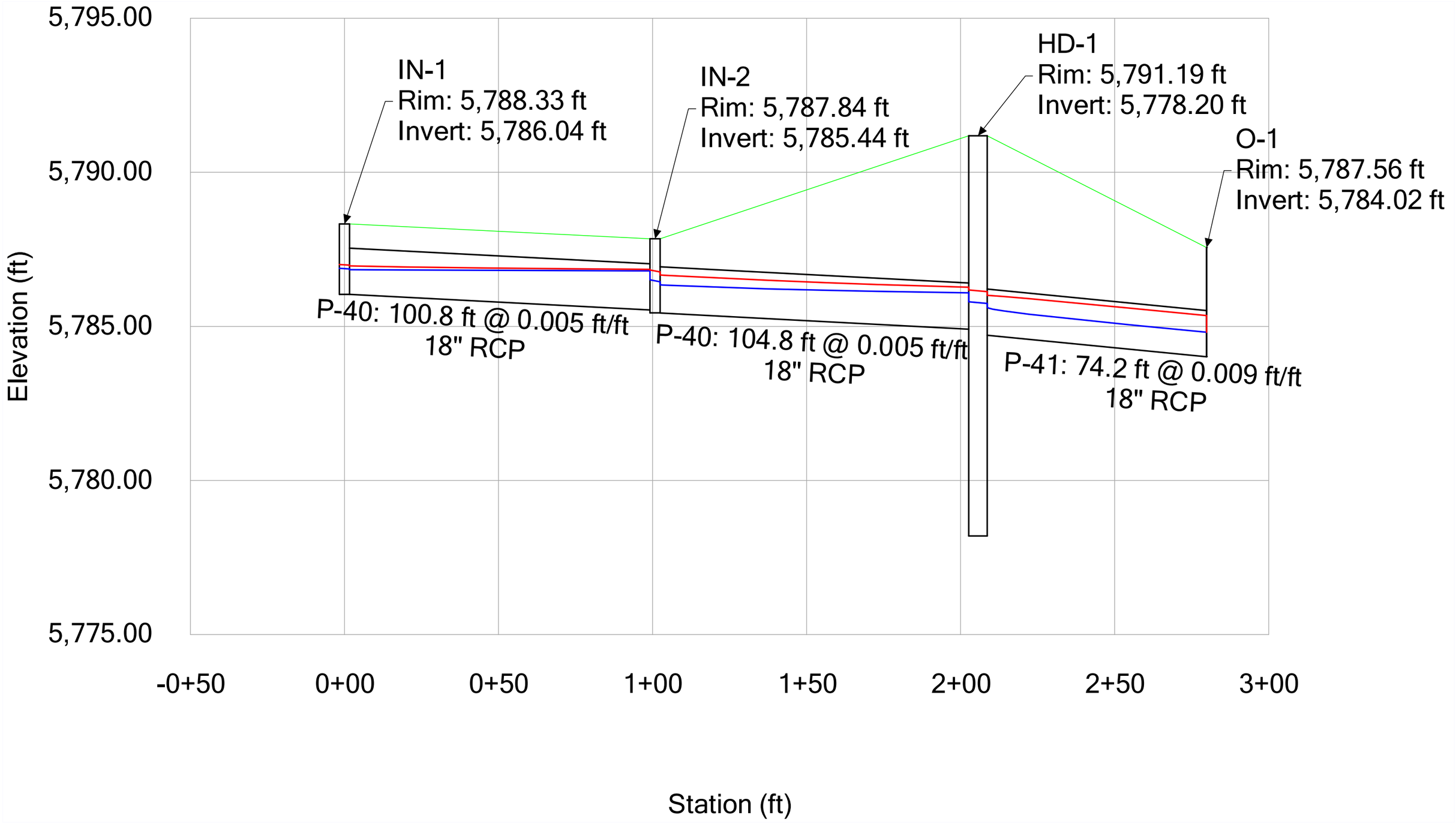

APPENDIX E

HYDRODYNAMIC SEPARATOR

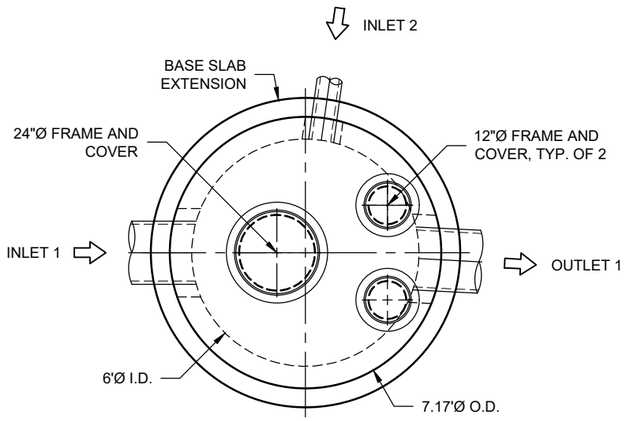

1 PLAN VIEW
INTERNALS NOT SHOWN

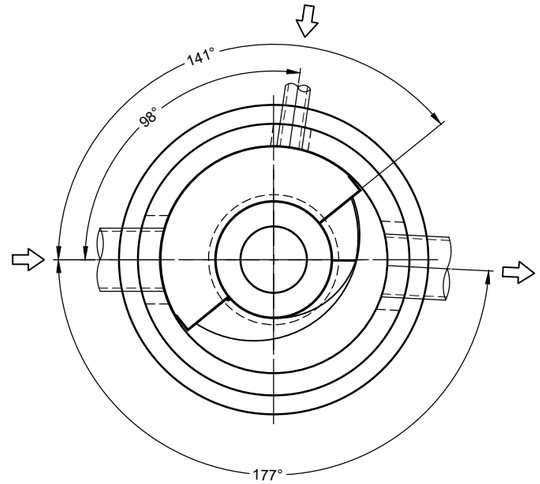

1 PLAN VIEW FOR PIPE ORIENTATION
TOP SLAB NOT SHOWN

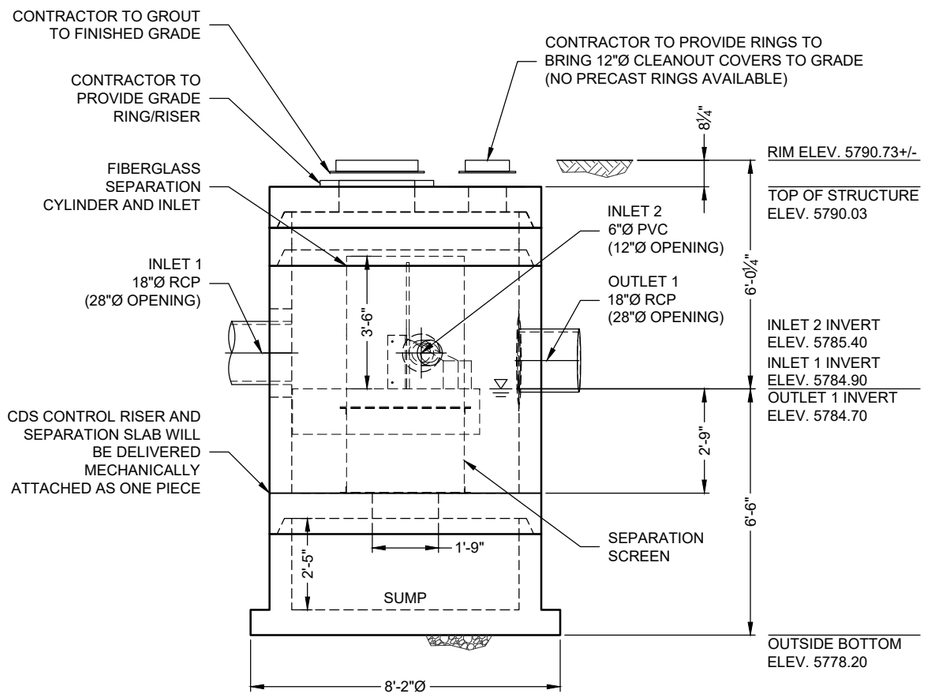

1 ELEVATION VIEW

MATERIAL LIST (PROVIDED BY CONTECH)

COUNT	DESCRIPTION	INSTALLED BY
1	3020-6 CONCENTRIC FIBERGLASS INSERT	CONTECH
1	3020, 2400 micron, 3.1' O.D. x 2.25' SCREEN, GREEN FLANGE UP	CONTECH
1	HARDWARE KIT	CONTECH
1	SEALANT FOR JOINTS	CONTRACTOR
1	24"Ø X 4" FRAME AND COVER, EJ #41600389, OR EQUIV.	CONTRACTOR
2	12"Ø X 4" FRAME AND COVER, EJ #41610201, OR EQUIV.	CONTRACTOR

SITE DESIGN DATA

WATER QUALITY FLOW RATE	1.90 CFS
PEAK FLOW RATE	5.4 CFS
RETURN PERIOD OF PEAK FLOW	100 YRS

GENERAL NOTES
1. CONTECH TO PROVIDE ALL MATERIALS UNLESS NOTED OTHERWISE.
2. FOR FABRICATION DRAWINGS WITH DETAILED STRUCTURE DIMENSIONS AND WEIGHT, PLEASE CONTACT YOUR CONTECH ENGINEERED SOLUTIONS LLC REPRESENTATIVE. www.ContechES.com
3. CDS WATER QUALITY STRUCTURE SHALL BE IN ACCORDANCE WITH ALL DESIGN DATA AND INFORMATION CONTAINED IN THIS DRAWING. CONTRACTOR TO CONFIRM STRUCTURE MEETS REQUIREMENTS OF PROJECT.
4. STRUCTURE SHALL MEET AASHTO HS-20 LOAD RATING, ASSUMING EARTH COVER OF 0' - 2', AND GROUNDWATER ELEVATION AT, OR BELOW, THE OUTLET PIPE INVERT ELEVATION. ENGINEER OF RECORD TO CONFIRM ACTUAL GROUNDWATER ELEVATION. CASTINGS SHALL MEET AASHTO M306 AND BE CAST WITH THE CONTECH LOGO.
5. IF REQUIRED, PVC HYDRAULIC SHEAR PLATE IS PLACED ON SHELF AT BOTTOM OF SCREEN CYLINDER. REMOVE AND REPLACE AS NECESSARY DURING MAINTENANCE CLEANING.
6. CDS STRUCTURE SHALL BE PRECAST CONCRETE CONFORMING TO ASTM C-478 AND AASHTO LOAD FACTOR DESIGN METHOD.

INSTALLATION NOTES
A. ANY SUB-BASE, BACKFILL DEPTH, AND/OR ANTI-FLOTATION PROVISIONS ARE SITE-SPECIFIC DESIGN CONSIDERATIONS AND SHALL BE SPECIFIED BY ENGINEER OF RECORD.
B. CONTRACTOR TO PROVIDE EQUIPMENT WITH SUFFICIENT LIFTING AND REACH CAPACITY TO LIFT AND SET THE CDS MANHOLE STRUCTURE.
C. CONTRACTOR TO INSTALL JOINT SEALANT BETWEEN ALL STRUCTURE SECTIONS AND ASSEMBLE STRUCTURE.
D. CONTRACTOR TO PROVIDE, INSTALL, AND GROUT INLET AND OUTLET PIPE(S). MATCH PIPE INVERTS WITH ELEVATIONS SHOWN. ALL PIPE CENTERLINES TO MATCH PIPE OPENING CENTERLINES.
E. CONTRACTOR TO TAKE APPROPRIATE MEASURES TO ASSURE UNIT IS WATER TIGHT, HOLDING WATER TO FLOWLINE INVERT MINIMUM. IT IS SUGGESTED THAT ALL JOINTS BELOW PIPE INVERTS ARE GROUTED.

STRUCTURE WEIGHT
APPROXIMATE HEAVIEST PICK = 15500 LBS.
STRUCTURE IS DELIVERED IN 4 PIECES

MAX FOOTPRINT = 8.17'Ø

CONTECH
CONTRACT
DRAWING

RNK-HNCO
LAYOUT 1H

The design and information shown on this drawing is provided as a service to the owner, engineer and contractor by CONTECH Construction Products Inc. or one of its affiliated companies ("CONTECH"). Neither this drawing nor any part hereof may be used, copied, reproduced or modified in any manner without the prior written consent of CONTECH. Failure to comply is done at the user's own risk and CONTECH expressly disclaims any liability or responsibility for such use.

If discrepancies between the supplied information upon which this drawing is based and actual conditions as encountered at the site are found, these discrepancies must be reported to CONTECH immediately for re-evaluation of the design. CONTECH accepts no liability for designs based on incomplete or inaccurate information supplied by others.

MARK	DATE	REVISION DESCRIPTION	BY
1	11/3/2026	REVISED LAYOUT PER EOR	EDM

CDS3020-6-C - 907509-010
631670 MURPHY OIL USA
ENGLEWOOD, CO
SITE DESIGNATION: HYDRODYNAMIC SEPARATOR

CONTECH ENGINEERED SOLUTIONS LLC
www.ContechES.com
5670 Greenwood Plaza Blvd., Suite 530, Greenwood Village, CO 80111
720-587-2700 720-587-2650 FAX

FOR PATENT INFORMATION, GO TO www.ContechES.com/IP

DATE: 7/29/2026
DESIGNED: STS | DRAWN: EDM
CHECKED: STS | APPROVED: STS
PROJECT No.: 907509 | SEQUENCE No.: 010
SHEET: 1 OF 1

C:\USERS\ERIC.MOWELL\ONEDRIVE - THE QUIKRETE COMPANIES\DYNAMICS365 - CONTECH - PROJECTS\907509\PRODUCTS\10-CDS3020-6-C\DRAWINGS\907509-10-CDS3020-6-C-CONFAB.DWG 11/3/2026 11:56 AM

V1610-2BF RG V1610-2CV Assembly

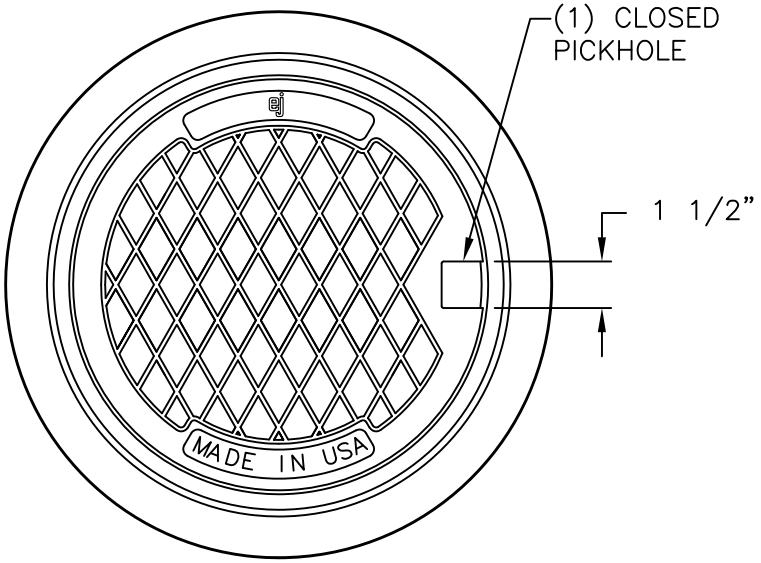

BOTTOM FLANGE VIEW

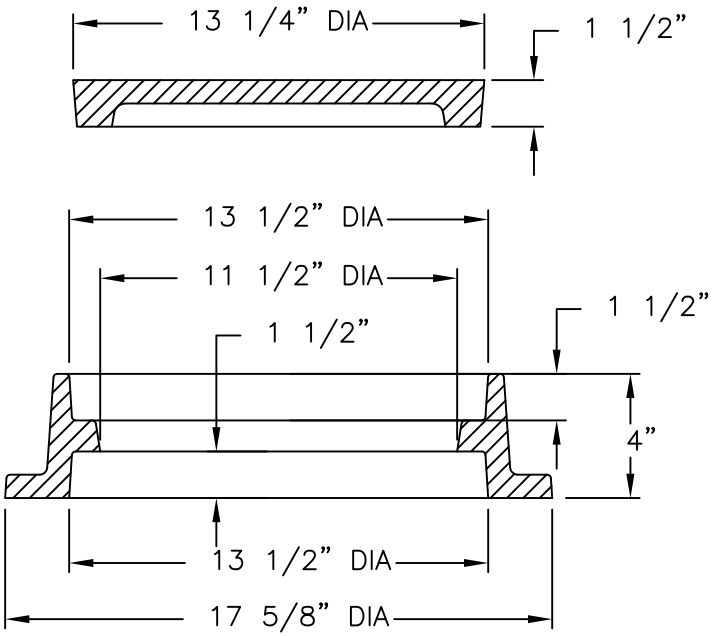

SECTION VIEW

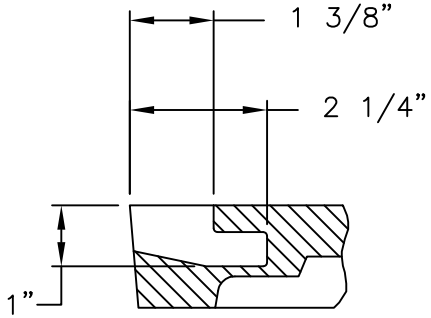

PICKHOLE DETAIL

NOTE:
RING IS REVERSIBLE AND CAN BE INSTALLED AS A TOP FLANGE UNIT

Product Number
41610201

Design Features
-Materials
Cleanout/Monument Box Frame
Gray Iron (CL35B)
Cleanout/Monument Box Cover
Gray Iron (CL35B)

-Design Load
Heavy Duty
-Open Area
n/a
-Coating
Undipped
-√Designates Machined Surface

Certification
- ASTM A48
-
-
-Country of Origin: USA

Major Components
41610210
41610220

Drawing Revision
06/12/2003 Designer: DAL
09/09/2015 Revised By: DVD

Disclaimer
Weights (lbs./kg) dimensions (inches/mm) and drawings provided for your guidance. We reserve the right to modify specifications without prior notice.

CONFIDENTIAL: This drawing is the property of EJ GROUP, Inc., and embodies confidential information, registered marks, patents, trade secret information, and/or know how that is the property of EJ GROUP, Inc.
Copyright © 2012 EJ GROUP, Inc.
All rights reserved.

Contact
800 626 4653
ejco.com

V1600-3 V1610-3 Assembly

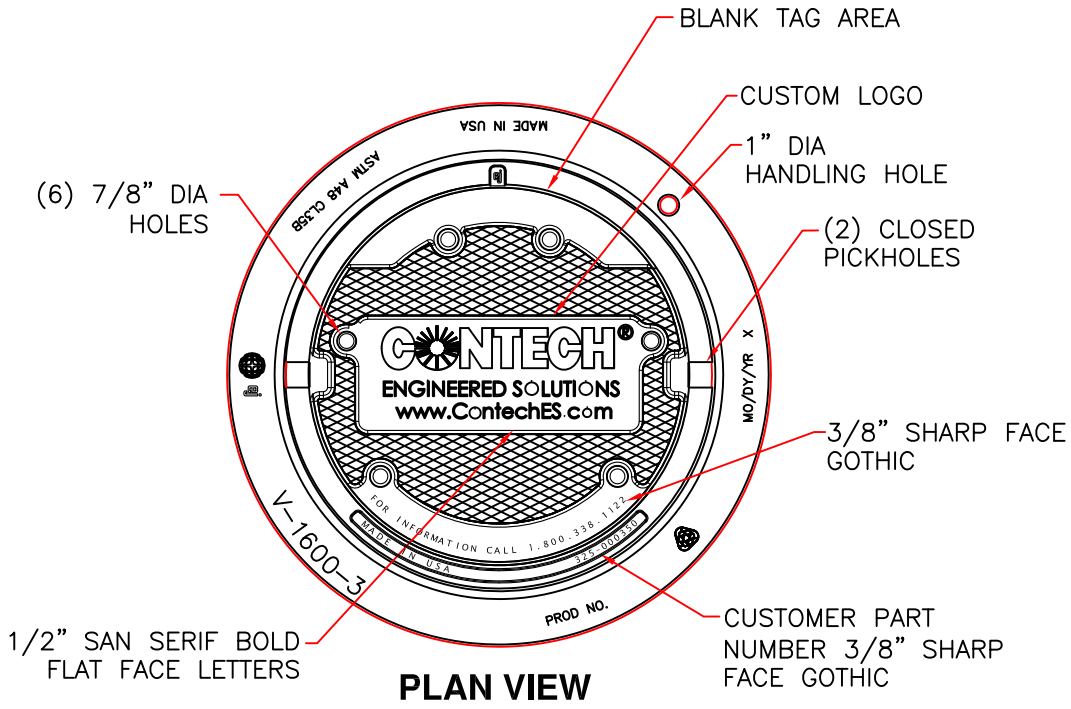

PLAN VIEW

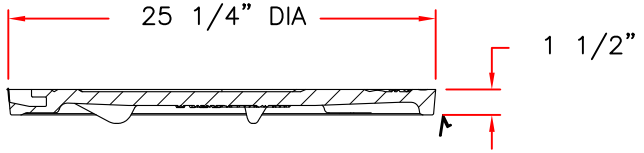

COVER SECTION

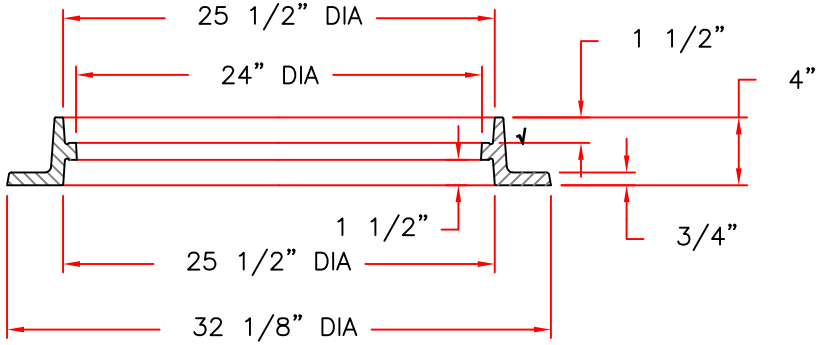

RING SECTION

Product Number

41600389

Design Features

-Materials
  Frame
    Gray Iron (CL35B)
  Cover
    Gray Iron (CL35B)

-Design Load
  Heavy Duty
-Open Area
  n/a
-Coating
  Undipped
-√Designates Machined Surface

Certification

-
-ASTM A48
-
-Country of Origin: USA

Major Components

41600310
41600374

Drawing Revision

05/02/2008 Designer: DEW
6/20/2017 Revised By: DAE

Disclaimer

Weights (lbs./kg) dimensions (inches/mm) and drawings provided for your guidance. We reserve the right to modify specifications without prior notice.

CONFIDENTIAL: This drawing is the property of EJ GROUP, Inc., and embodies confidential information, registered marks, patents, trade secret information, and/or know how that is the property of EJ GROUP, Inc.
Copyright © 2012 EJ GROUP, Inc.
All rights reserved.

Contact

800 626 4653
ejco.com

APPENDIX G

DRAINAGE MAP

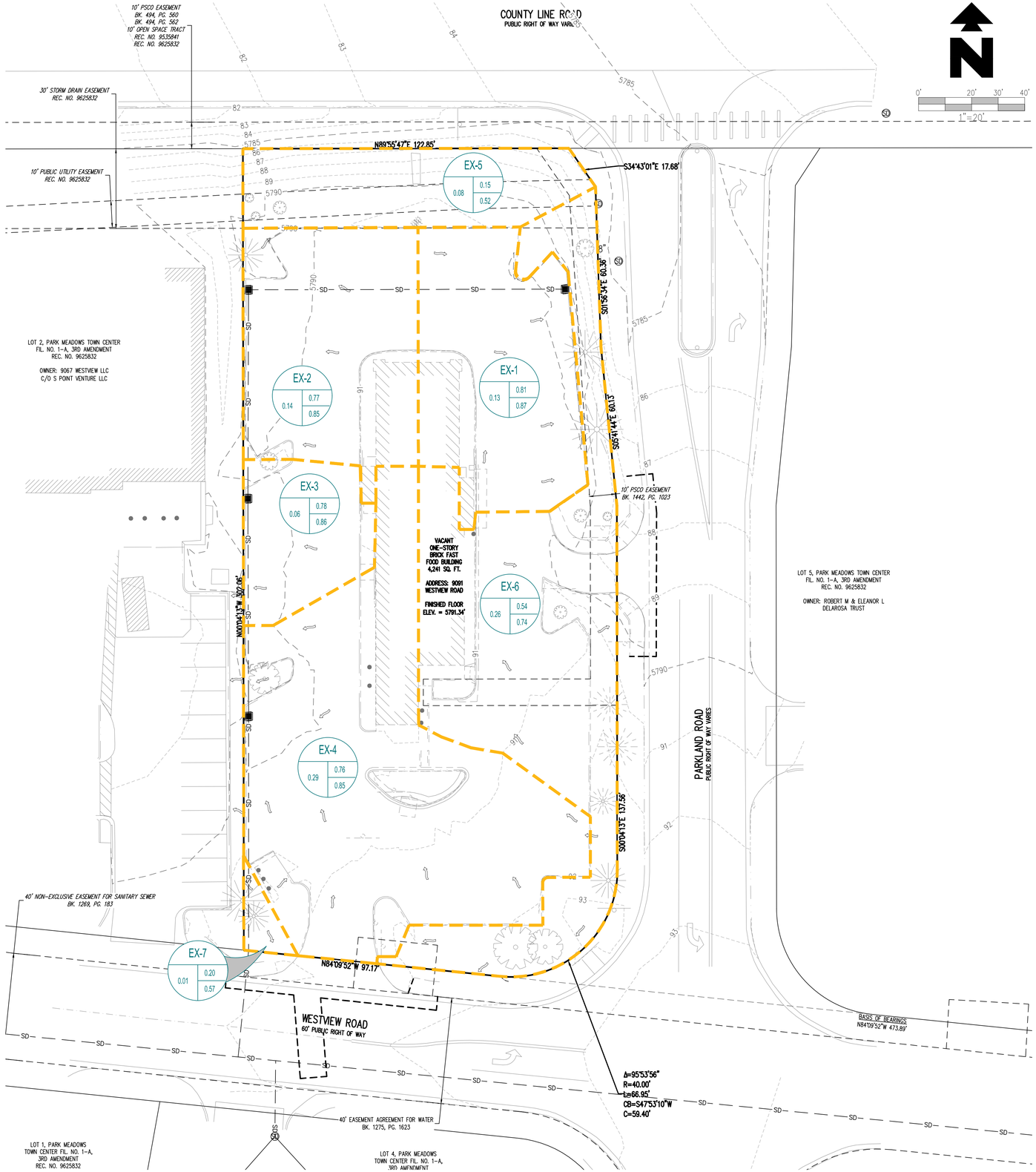

DRAINAGE LEGEND

- PROPERTY BOUNDARY LINE
- SD — EXISTING STORM SEWER
- 5460 — EXISTING MAJOR CONTOUR
- 52 — EXISTING MINOR CONTOUR
- EXISTING ONSITE BASIN BOUNDARY LINE
- EXISTING FLOW ARROW
- A-1 — BASIN DESIGNATION
- 0.00 — 5-YEAR RUNOFF COEFFICIENT
- 0.00 — 100-YEAR RUNOFF COEFFICIENT
- BASIN AREA IN ACRES

BASIN SUMMARY TABLE

Tributary Sub-basin	Area (acres)	C_5	C_{100}	t_c (min)	Q_5 (cfs)	Q_{100} (cfs)
EX-1	0.13	0.81	0.87	5.00	0.53	0.97
EX-2	0.14	0.77	0.85	5.00	0.49	0.88
EX-3	0.06	0.78	0.86	5.00	0.24	0.44
EX-4	0.29	0.76	0.85	5.00	1.07	1.94
EX-5	0.08	0.20	0.57	5.00	0.10	0.18
EX-6	0.26	0.54	0.74	5.00	0.68	1.23
EX-7	0.01	0.20	0.57	5.00	0.00	0.00
Total:	0.97				3.10	5.64

CITY OF LONE TREE

DATE

THE CONSTRUCTION PLANS HAVE BEEN REVIEWED BY THE CITY OF LONE TREE FOR SITE IMPROVEMENTS, STORM SEWER, GRADING AND EROSION CONTROL IMPROVEMENTS ONLY.

ENGINEERING DIVISION ACCEPTANCE BLOCK

SHEET NO. DR-1 Sheet X of X

ENGINEERING STAMP

CD 4TH SUBMITTAL	11/05/26 DATE	MOC148 PRN	JDP PM	SE DES	DMH DRW

EXISTING DRAINAGE MAP
MURPHY USA (NTI)
9091 WESTVIEW RD
LONE TREE COLORADO

Galloway
5500 Greenwood Plaza Blvd., Suite 200
Greenwood Village, CO 80111
303.770.8884 • GallowayUS.com

MURPHY OIL USA, INC.
200 PEACH STREET
EL DORADO, AR 71730
MURPHY USA

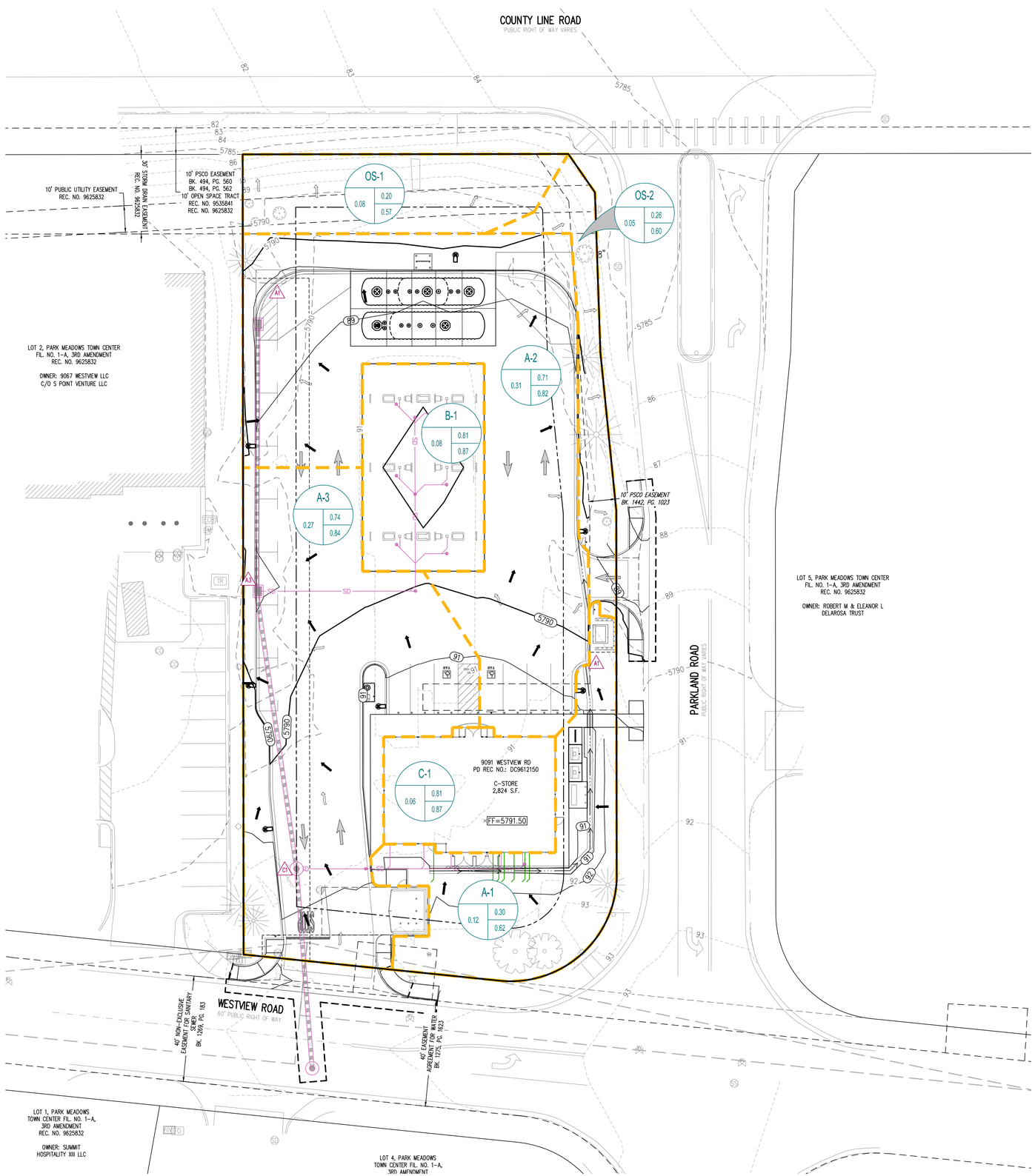

DRAINAGE LEGEND

- PROPERTY BOUNDARY LINE
- EXISTING STORM SEWER
- PROPOSED STORM SEWER (LESS THAN 12"ø)
- PROPOSED STORM SEWER (12"ø AND LARGER)
- EXISTING MAJOR CONTOUR
- EXISTING MINOR CONTOUR
- PROPOSED MAJOR CONTOUR
- PROPOSED MINOR CONTOUR
- PROPOSED ONSITE BASIN BOUNDARY LINE
- PROPOSED DESIGN POINT
- EXISTING FLOW ARROW
- PROPOSED FLOW ARROW
- BASIN DESIGNATION
- 5-YEAR RUNOFF COEFFICIENT
- 100-YEAR RUNOFF COEFFICIENT
- BASIN AREA IN ACRES

BASIN SUMMARY TABLE

Tributary Sub-basin	Area (acres)	C_5	C_{100}	t_c (min)	Q_5 (cfs)	Q_{100} (cfs)
A-1	0.12	0.30	0.62	5.00	0.2	0.6
A-2	0.31	0.71	0.82	5.51	1.0	2.1
A-3	0.27	0.74	0.84	5.00	1.0	1.8
B-1	0.08	0.81	0.87	5.00	0.3	0.6
C-1	0.06	0.81	0.87	5.00	0.2	0.5
OS-1	0.08	0.20	0.57	5.00	0.1	0.4
OS-2	0.05	0.26	0.60	5.00	0.0	0.3
Total WQ	0.85				2.6	5.4
Total	0.97				2.8	6.0

CITY OF LONE TREE

DATE

THE CONSTRUCTION PLANS HAVE BEEN REVIEWED BY THE CITY OF LONE TREE FOR SITE IMPROVEMENTS, STORM SEWER, GRADING AND EROSION CONTROL IMPROVEMENTS ONLY.

ENGINEERING DIVISION ACCEPTANCE BLOCK

SHEET NO. DR-2
Sheet X of X

ENGINEERING STAMP

CD 4TH SUBMITTAL	11/05/26 DATE	MOC148 PRN	JDP PM	SE DES	DMH DRW

PROPOSED DRAINAGE MAP
MURPHY USA (NTI)
9091 WESTVIEW RD
LONE TREE COLORADO

Galloway
5500 Greenwood Plaza Blvd., Suite 200
Greenwood Village, CO 80111
303.770.8884 • GallowayUS.com

MURPHY OIL USA, INC.
MURPHY USA
200 PEACH STREET
EL DORADO, AR 71730